Bally®

FO 563

GAME 1118-E

EIGHT BALL

Bally MANUFACTURING CORPORATION
2640 Belmont Avenue · Chicago, Illinois, 60618, U.S.A.
TELEPHONE (312) 267-6060/TELEX NO. 253076/CABLE ADDRESS: BALFAN

GAME #1118-E EIGHT BALL

Installation and General Game Operation Instructions

INDEX

		PAGE
I.	INSTALLATION	1
II.	GENERAL GAME OPERATION	2
III.	BOOKKEEPING FUNCTIONS	3
IV.	FEATURE OPERATION AND SCORING	4
V.	GAME ADJUSTMENTS	5
	A. PLAYFIELD ADJUSTMENTS	5
	B. BACKBOX ADJUSTMENTS	5
	CREDITS/COIN	5
	MAXIMUM CREDITS	6
	BALLS/GAME	6
	MATCH FEATURE OPTION	6
	CREDIT DISPLAY	6
	HIGH SCORE FEATURE OPTION	6
	MELODY OPTION	6
	HIGH GAME TO DATE	6
	GAME FEATURE OPTIONS	7
	C. FRONT DOOR GAME ADJUSTMENTS	
	HIGH SCORE FEATURE	8
	HIGH GAME TO DATE FEATURE	8
VI.	RECOMMENDED SCORE CARDS	11
VII.	INSTRUCTION CARD OPTIONS	12
VIII.	ROUTINE MAINTENANCE ON LOCATION	13
IX.	TROUBLE SHOOTING ON LOCATION	13
X.	SERVICE/PARTS	19
XI.	PARTS LIST	20-28

BLOCK DIAGRAM—ELECTRONIC PINBALL GAME

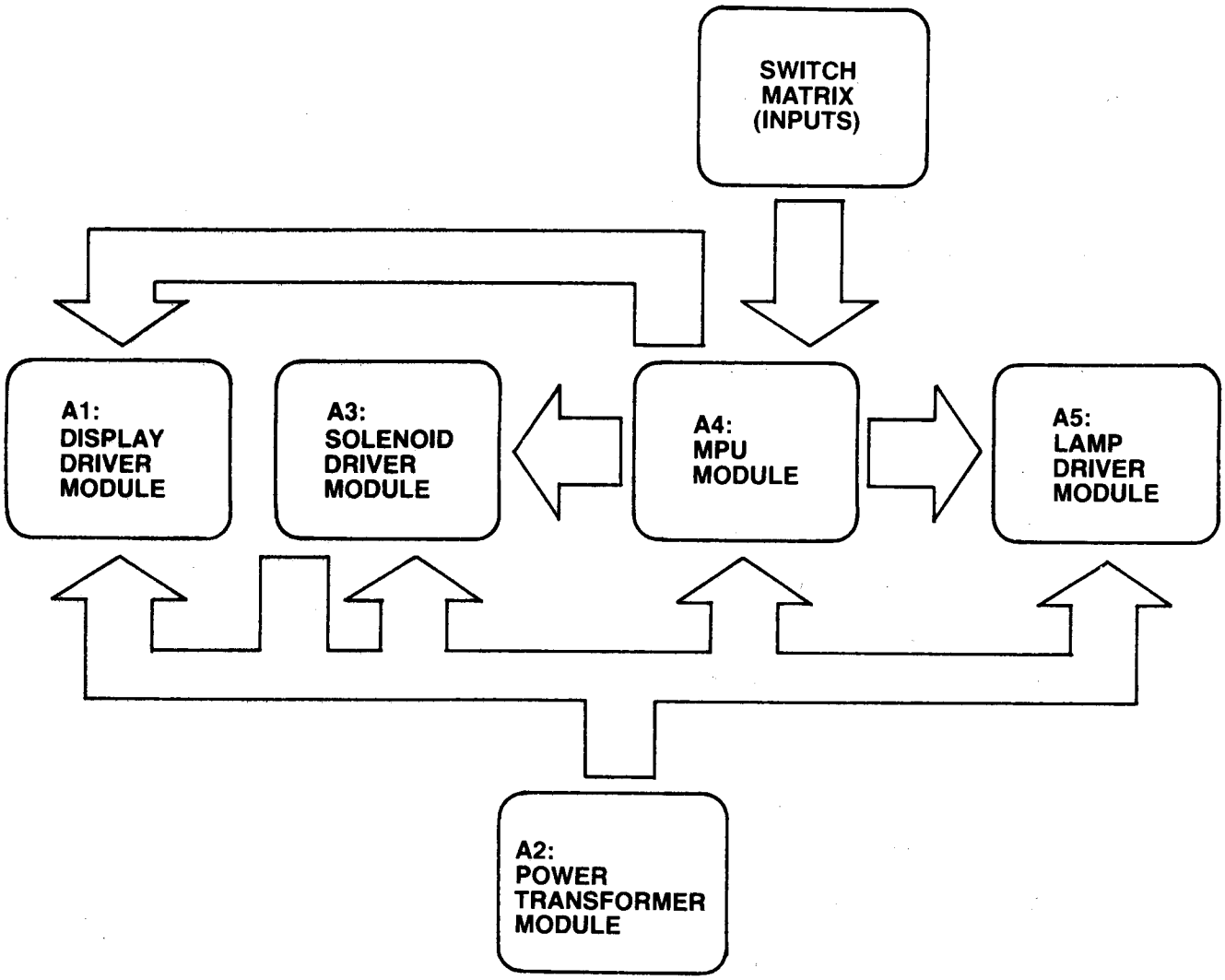

I. INSTALLATION

Assemble the game as follows:

Bolt legs to cabinet. Bolt back box to cabinet. Use flat washers under bolt heads. Gently feed cable connectors and ground braid through cable port in back box. Screw ground braid to braid in back box. Carefully and fully insert connectors on printed circuit assemblies.

On all games there are certain items that should be checked after shipment. These are visual inspections which may avoid time consuming service work later. Minor troubles caused by abusive handling in shipment are unavoidable. Cable connectors may be loosened, switches (especially tilt switches) may go out of adjustment. Plumb bob tilt switch should always be adjusted after game is set on location and leg levelers are adjusted.

Visual inspections before plugging in line cord:

1. Check that all cable connectors are completely seated on printed circuit assemblies.
2. Check that cables are clear of all moving parts.
3. Check for any wires that may have become disconnected.
4. Check switches for loose solder or other foreign material that may have come loose in shipment and could cause shorting of contacts.
5. Check wires on coils for proper soldering. Cold solder connections may not show up in factory inspection, but vibration in shipment may break contact.
6. Check that fuses are firmly seated and making good contact.
7. Check the transformer for any foreign material shorting across wiring lugs.
8. Check wiring of transformer to correspond to location voltage. See figure 1.

Check adjustment of the three (normally open) tilt switches:

1. Panel tilt on bottom of playfield panel.
2. Plumb bob tilt on left side of cabinet near front door.
3. Ball tilt above plumb bob tilt. Insert the smaller ball (15/16″ dia.) into the ball tilt assembly, and adjust the bracket so the ball will roll free to contact the switch blade, if front of cabinet is raised.

TRANSFORMER CONNECTION INSTRUCTIONS

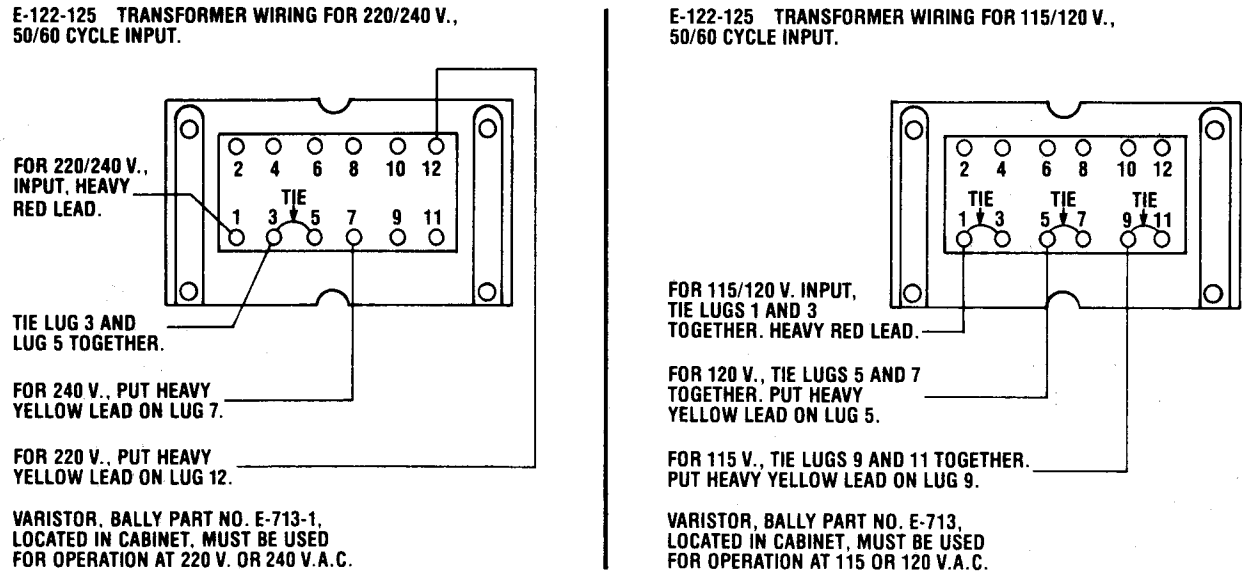

FIGURE I. TRANSFORMER
(PART OF POWER—TRANSFORMER MODULE A2, LOCATED IN BACK BOX).

II. GENERAL GAME OPERATION

Place ball into playfield by outhole.

Coin game. Coin should be rejected. Plug in line cord. Move power ON-OFF master switch at bottom right front corner of cabinet to 'ON' position. The game will play a power-up tune to announce game-readiness. Drop targets are reset, scores are set to zero, alternating with the 'High Score to Date,' and the game is ready for play. Coin game. The game should accept the coin and post credits* for coins accepted (adjustable). Pressing the credit button on the door will cause the outhole kicker to serve the ball to the shooter alley. The 1st player-up lite is lit. A game-up tune* is played to announce play-readiness. The bonus score is advanced to 1000 points.

One player is posted each additional time the credit button is pressed (one to four can play). The credits are reduced by one each time the credit button is pressed until the credits are reduced to zero.

Shooting the ball initiates play. Rebound switches score 10 points. Thumper-bumpers, when not lit, score 10 points.

The game awards all points earned by the player. If spinner is turning and scoring when the ball hits a target, the spinner and the target scores are awarded.

When the ball enters the outhole, the bonus score is added to the total score. The player-up and/or ball in play on the back box is advanced one position. The bonus score is advanced to 1000 points. The outhole kicker serves the ball to the shooter alley and play is resumed. This continues until each player has played the allowable number of balls per game (adjustable). At this time the 'Game Over' light is lit. A random Match* number appears and the 'Match' light is lit. If the number is the same as the last two digits in a player's score, a free game is awarded.

Extra balls won during the course of the game are played immediately after the player's regular ball enters the outhole. The player-up and/or ball in play on the back box are not advanced for extra ball play. Bonus score is added to the player's score and the bonus is set to 1000 points before the game serves the extra ball for play.

At the end of the game, a 'High Game to Date' is alternately flashed with all 4 player scores. If the 'High Game to Date' is beat, this feature* awards free games.

Tilting the game results in loss of a ball. The flippers, thumper-bumpers, etc., go 'dead.' Bonus points are not scored. The purpose of the tilt penalty is to discourage the player from jostling the machine in an attempt to prolong play. Game action becomes normal after the ball kicker assembly serves the ball to the shooter alley.

Slamming the machine results in loss of the game. All feature lights go out, the game goes 'dead,' and a time delay occurs. The purpose of the time delay is to discourage unnecessary abuse of the machine. After the delay, the 'Game Over' light lites and the power-up tune is played. The time delay occurs anytime one of the slam switches is made to contact. There is one factory installed slam switch on the front door. (Any number of slam switches could be installed by the operator, to meet his individual requirement.) The switch should be adjusted to have approximately 1/16″ gap between the contacts. The weighted blade should be adjusted to attain the desired sensitivity. Decreasing the gap between contacts will make the switch more sensitive. Opening the gap will reduce sensitivity.

*Some tunes and features can be disabled by operator if so desired. See Back Box Adjustments.

III. BOOKKEEPING FUNCTIONS

The game is designed to help the operator perform certain accounting functions. The game can display the number of total plays and replays (free games). It can display the number of coins dropped down each coin chute. The bookkeeping functions are displayed on all player score displays simultaneously. An identification number, 05 to 11 appears on the Match/Ball in Play window as follows:

05— 00 to— 40 = Current Credits
*06—10000 to—999999 = Total Plays (Payed & Free Games)
*07—10000 to—999999 = Total Replays (Free Games)
08— 00 to—999999 = Total times 'High Score to Date' is beat
*09—10000 to—999999 = Coins Dropped thru Coin Chute #1
*10—10000 to—999999 = Coins Dropped thru Coin Chute #2**
*11—10000 to—999999 = Coins Dropped thru Coin Chute #3**

The game displays the first bookkeeping entry if the Self-Test button (See Fig. III) on the inside of the front door is pressed nine times. Alternately push and release the Self-Test button at one second intervals. The number 05 appears in the 'Match/Ball in Play' window. Current credits appear on the player score displays. Each additional press of the button causes the next entry to be displayed.

After the data in each bookkeeping register is recorded, it can be set to zero simply by pressing switch button S33, located on A4, the MPU module in the back box. (See Fig. III). Any or all registers can be cleared by alternating between the Self-Test button and the switch button on the MPU module. The operator is given this option as a possible convenience and can elect to use or not use it as his needs direct.

Pressing the button once more with the eleventh entry displayed causes the game to play the power-up tune and light the Game-Over light.

*The 10,000 level is pre-set at the factory; can be set to zero, initially, if desired.

**If Coin Chute is not used in game, number displayed (if other than 00) on Player Score displays has no significance.

IV. FEATURE OPERATION AND SCORING

A. GENERAL:

Players #1 and #3 are assigned Solid Balls (1-7)
Players #2 and #4 are assigned Striped Balls (9-15)

B. BONUS SCORE FEATURE:

When the ball goes thru a lit top lane or lit right return lane, or hits lit left, right or 8-Ball target, the respective ball in the rack is lit and 500 points is awarded. Each lit racked ball scores 3000 bonus points or a 2X, 3X, 5X multiple of that bonus score when the ball goes in the outhole.

C. MEMORY:

After each ball in play, the lit balls in the rack will be retained for that player's next turn. If 8-Ball sequence is made, that portion of the rack resets on that player's next turn. Also, after the 8-Ball sequence is made the SUPER BONUS lite is lit and award is made on that player's next and each additional turn.

D. 8-BALL TARGET FEATURE:

Hitting the 8-Ball target lites the Break Shot Lane and the spinner target. After #1-#7 or #9-#15 racked balls are lit, the 8-Ball target lite lites. Hitting the 8-Ball target when lit, lites the Break Shot Lane, the spinner target, right outlane to score special* and sets up the Super Bonus for that player's remaining turns.

E. SUPER BONUS FEATURE:

The Super Bonus lite is lit if on the player's previous turn the #1-#8 or #8-#15 sequence of lit racked balls were made. 24,000 points plus 3,000 for each lit rack ball times any multiplier is scored when the ball goes into the outhole.

EXAMPLE: 2 lit racked balls and double bonus multiplier.

3,000 x 2 lit racked balls	=	6,000 points
Super Bonus		24,000 points
Multiplier 2X (30,000)	=	60,000 points

F. TOP LANE (SPOTTER) FEATURE:

After all four top lanes are made, arrows under either two center lanes lite. When ball goes thru lit arrow lane the lit Bank Shot Lane value is awarded*.

G. BANK SHOT LANE FEATURE:

Six lites indicate values of 300; 600 and 2X; 900 and 3X; 1,200 and 5X; 1,500 and X-ball; and 5,000 points. When ball goes thru lit arrow lane on top or over rollover button in Bank Shot Lane, the lit value is awarded* and 500 points is also awarded.

H. BREAK SHOT LANE FEATURE:

Hitting 8-Ball target lites lane. When lane is lit the ball entering Break Shot lane is kicked out and scores 5,000 points. Ball entering lane when lite is out goes into outhole.

I. SPINNING TARGET FEATURE:

Scores 10 points. Hitting 8-Ball target lites spinner to score 1000 points per spin.

*Adjustable—See Game Adjustments

V. GAME ADJUSTMENTS

A. Playfield Panel Post Adjustments:

Posts that control left and right outlane opening on panel can be moved to make access to outlanes easier or harder for ball to enter. See Figure II.

Easier entry will decrease playing time and scoring (conservative).
Harder entry will increase playing time and scoring (liberal).

B. Back Box Game Adjustments:

Each game has thirty-two switches located on A4, the MPU module, located in the back box, that allow play to be customized to the location. See Figure III. Credits per coin, maximum credits, credit display, balls per game, match feature, high game feature, special award and melody are selectable by means of the switches. The switches are contained in four-sixteen lead packages numbered S1-8, S9-16, S17-24 and S25-32 for easy identification. The "ON" toggle position is marked on the assembly. **Turn off power before making adjustments.**

Credits/Coin Adjustments:

The credits per coin are selectable by means of S25-S28 for coin chute #2. The switch settings and resultant credits/coin are as follows:

S28	S27	S26	S25	Credits/Coin
OFF	OFF	OFF	OFF	Same as Coin Chute #1 Settings
OFF	OFF	OFF	ON	1/1 Coin
OFF	OFF	ON	OFF	2/1 Coin
OFF	OFF	ON	ON	3/1 Coin
OFF	ON	OFF	OFF	4/1 Coin
OFF	ON	OFF	ON	5/1 Coin
OFF	ON	ON	OFF	6/1 Coin
OFF	ON	ON	ON	7/1 Coin
ON	OFF	OFF	OFF	8/1 Coin
ON	OFF	OFF	ON	9/1 Coin
ON	OFF	ON	OFF	10/1 Coin
ON	OFF	ON	ON	11/1 Coin
ON	ON	OFF	OFF	12/1 Coin
ON	ON	OFF	ON	13/1 Coin
ON	ON	ON	OFF	14/1 Coin
ON	ON	ON	ON	15/1 Coin

The credits given per coin are selectable by means of switches 1-5 incl., for coin chute #1 and switches 9-13 incl., for coin chute #3. Thirty-one different credit ratios are available for each coin chute. The switch settings and resultant credits/coin are listed below.

CREDITS/COIN ADJUSTMENTS

COIN CHUTE	SWITCHES					CREDITS/COIN
#1 (HINGE SIDE)	5	4	3	2	1	
OR #3	13	12	11	10	9	
	OFF	OFF	OFF	OFF	OFF	3/2 COINS**
	OFF	OFF	OFF	OFF	ON	3/2 COINS**
	OFF	OFF	OFF	ON	OFF	1/COIN
	OFF	OFF	OFF	ON	ON	1/2 COINS*
	OFF	OFF	ON	OFF	OFF	2/COIN
	OFF	OFF	ON	OFF	ON	2/2 COINS*
	OFF	OFF	ON	ON	OFF	3/COIN
	OFF	OFF	ON	ON	ON	3/2 COINS*
	OFF	ON	OFF	OFF	OFF	4/COIN
	OFF	ON	OFF	OFF	ON	4/2 COINS*
	OFF	ON	OFF	ON	OFF	5/COIN
	OFF	ON	OFF	ON	ON	5/2 COINS*
	OFF	ON	ON	OFF	OFF	6/COIN
	OFF	ON	ON	OFF	ON	6/2 COINS*
	OFF	ON	ON	ON	OFF	7/COIN
	OFF	ON	ON	ON	ON	7/2 COINS*
	ON	OFF	OFF	OFF	OFF	8/COIN
	ON	OFF	OFF	OFF	ON	8/2 COINS*
	ON	OFF	OFF	ON	OFF	9/COIN
	ON	OFF	OFF	ON	ON	9/2 COINS*
	ON	OFF	ON	OFF	OFF	10/COIN
	ON	OFF	ON	OFF	ON	10/2 COINS*
	ON	OFF	ON	ON	OFF	11/COIN
	ON	OFF	ON	ON	ON	11/2 COINS*
	ON	ON	OFF	OFF	OFF	12/COIN
	ON	ON	OFF	OFF	ON	12/2 COINS*
	ON	ON	OFF	ON	OFF	13/COIN
	ON	ON	OFF	ON	ON	13/2 COINS*
	ON	ON	ON	OFF	OFF	14/COIN
	ON	ON	ON	OFF	ON	14/2 COINS*
	ON	ON	ON	ON	OFF	15/ COIN
	ON	ON	ON	ON	ON	15/2 COINS*

*No Credits until second coin is dropped.

**One Credit for first coin. Two Credits for second coin provided that no scoring occured between 1st and 2nd coin drops. If scoring occured, second coin gives one credit.

MAXIMUM CREDITS:

The maximum credits accepted by the machine limits the number of games that can be accumulated by coining, by winning replays or both. The maximum number of credits is selectable by means of switches 17, 18 and 19. Eight credits limits are available. Switch settings are listed below.

MAXIMUM CREDITS	SWITCHES 19	18	17
5	OFF	OFF	OFF
10	OFF	OFF	ON
15	OFF	ON	OFF
20	OFF	ON	ON
25	ON	OFF	OFF
30	ON	OFF	ON
35	ON	ON	OFF
40	ON	ON	ON

BALLS PER GAME:

# BALLS/GAME	SWITCH 16
5	ON
3	OFF

MATCH FEATURE:

When the Match Feature is ON, a random number appears in the 'Match/Ball in Play' window and the word MATCH is illuminated. If the number matches the tens digit in a player's score, a free game is awarded. The Match feature creates an incentive to play.

MATCH	SWITCH 21
ON	ON
OFF	OFF

CREDIT DISPLAY:

CREDITS DISPLAYED	SWITCH 20
YES	ON
NO	OFF

HIGH SCORE FEATURE:

The game is designed to award an Extra Ball or Free Game at each of the three score levels. See Front Door Game Adjustments.

AWARD	SWITCH 32
EXTRA BALL	OFF
REPLAY	ON

MELODY OPTION:

The game is designed to play several melodies to announce power-up, game-up, etc. The tunes are intended to attract attention to the game and increase game usage. The tunes are controlled by switch 8.

TUNES	SWITCH 8
ON	ON
OFF	OFF

HIGH GAME TO DATE FEATURE:

The game is designed to award free games as an option if high game to date is beat. Each time this happens, the winning score becomes the new high game score to beat. This score is displayed on all 4 player score displays at the end of each game as an incentive to play. Recommended setting is underlined.

HIGH GAME TO DATE FEATURE	SWITCH 7	SWITCH 6
No Award (Novelty)	OFF	OFF
One Credit	OFF	ON
Two Credits	ON	OFF
Three Credits	ON	ON

Recommended 3-Ball Switch Settings for the following are underlined.

TOP LANES (SPOTTER) FEATURE:

S24		
ON	(LIB)	Lanes 1/9 spotted with 4/12; and Lanes 2/10 spotted with 3/11
OFF	(CONS)	Each lane is spotted individually.

BANK SHOT FEATURE:

S23		
ON	(LIB)	Starts at 600 point and 2X position.
OFF	(CONS)	Starts at 300 point position
S31		
ON		Extra Ball Awarded
OFF		15,000 points Awarded

OUTLANE SPECIAL FEATURE:

S22		
ON	(LIB)	Lite stays on for Player's remaining turns.
OFF	(CONS)	Lite is lit for only one ball in play.
S30		
ON		Replay awarded
OFF		15,000 points awarded

C. Front Door Game Adjustments:

High Score Feature Adjustments:

The game is designed to award an extra ball (option) or a free game at each of three score levels. The recommended levels are on the score card in the game.

Any level from 2,000 to 998,000 can be set, as desired. It is also possible to reset or turn off (00) any or all of the levels, if desired.

1. Push and release Self-Test button (see Figure III) at one second intervals approximately five times or until number 01 appears on the Match/Ball in Play display.

2. The number on the Player Score Displays is the score level*. It can be increased, if desired, by holding the credit button in. To decrease the score level, reset to '00' and then hold the credit button in. Release the credit button when the desired number appears. Note that the level changes 2,000 points at a time. If the number '00' is left on the displays, the high score feature is eliminated for that level.

3. Repeat steps 1 and 2 for the second and third score levels. The number '02' and '03' on the Match/Ball in Play display are for the second and third levels, respectively.

High Game to Date Feature:

The game is designed to award free games when 'High Game to Date' is beat. For the recommended, factory preset level, see page 11.

It is recommended that the level, which will build with game play, be periodically reset to the factory recommended level to encourage game play. The adjustment procedure is the same as for the High Score Feature Adjustment, Steps 1 and 2. Continue pushing the Self-Test button until the number '04' appears on the Match/Ball in Play display and then do Step 2.

Any level from '00' to 998,000 can be set as described. It is to be noted that '00'does not turn off the feature, as it does on High Score feature. The feature is turned off by positioning switches S6 and S7 to the 'OFF' position, and 'ON' by positioning switches as discussed under "Back Box Game Adjustments.

*Can be quickly set to '00' by pressing S33 on the MPU assembly in the back box. See Figure III.

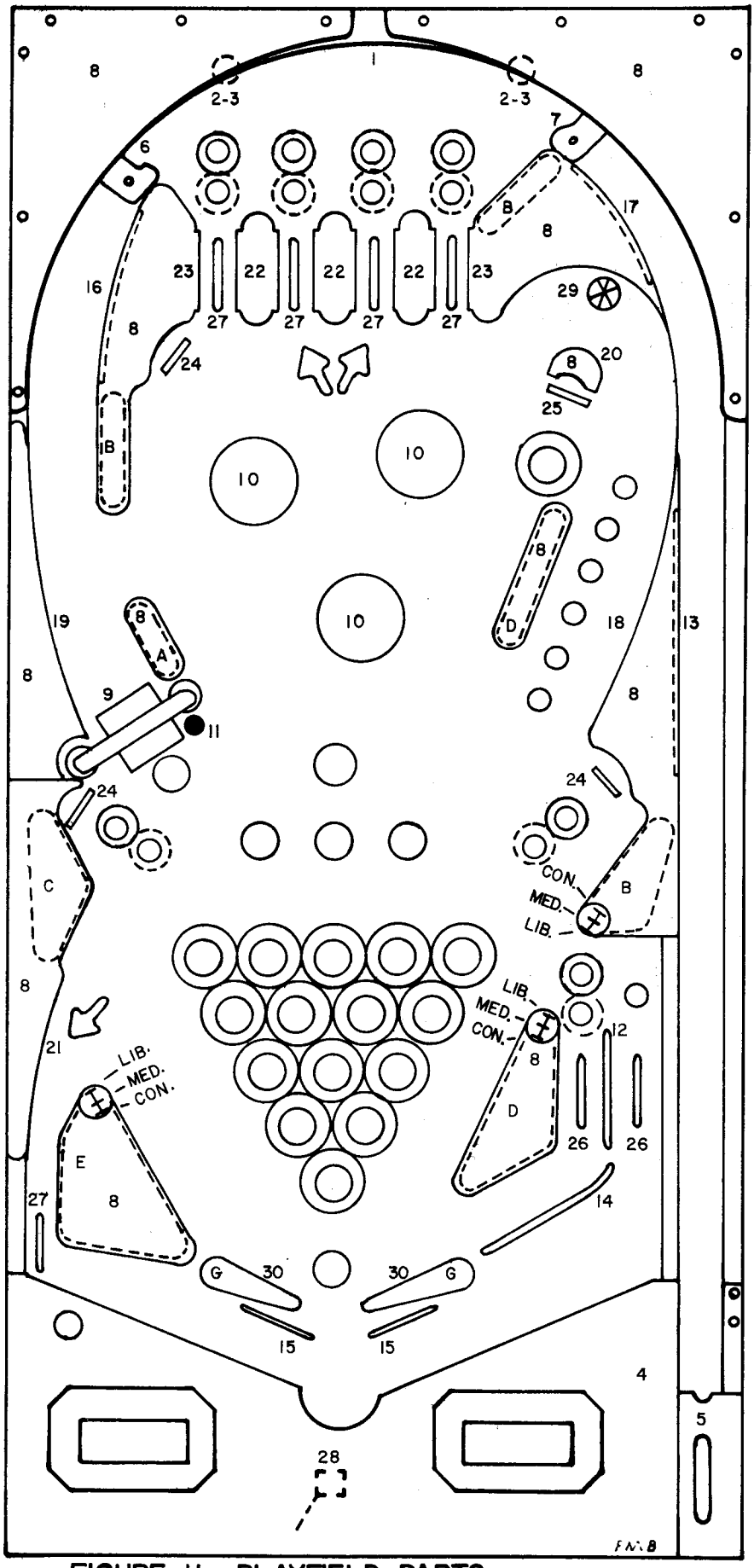

FIGURE 11 PLAYFIELD PARTS

#1118-E EIGHT BALL

RUBBER PARTS

A.	R-521-1	1″ DIA.	
B.	R-521-2	1½″ DIA.	(3)
C.	R-521-3	2″ DIA.	
D.	R-521-4	2½″ DIA.	(2)
E.	R-521-5	3″ DIA.	
F.	R-243	5/16″ DIA.	(15)
G.	R-406-3	FLIPPER	(2)

PANEL TOP PARTS

1.	ARCH RAIL	M-1774	
2.	RAIL POST	C-907	(2)
3.	RAIL POST CAP	C-908	(2)
4.	BOTTOM ARCH	P-5871-58	
5.	SHOOTER GAUGE	P-6359-24	
6.	BALL GATE (L)	A-1475-10	
7.	BALL GATE (R)	A-1475-9	
8.	SCREENED PLASTICS (SET)	M-1330-146	
9.	SPINNER GATE ASS'Y	ASE-2250-49	
10.	THUMPER CAP	A-3713-36	(3)
11.	MINIPOST & RUBBER	AS-2836-1	
12.	GUIDE WIRE	M-121-18	
13.	GUIDE WIRE	M-121-34	
14.	GUIDE WIRE	M-121-44	
15.	GUIDE WIRE	M-121-53	(2)
16.	GUIDE WIRE	M-121-16	
17.	GUIDE WIRE	M-121-67	
18.	GUIDE RAIL ASS'Y	A-3032-27	
19.	GUIDE RAIL ASS'Y	A-3032-28	
20.	GUIDE RAIL ASS'Y	A-3032-29	
21.	GUIDE RAIL	P-6244-72	
22.	PLASTIC GUIDE	C-695-1	(3)
23.	PLASTIC GUIDE	C-696-1	(2)
24.	TARGET ASS'Y	ASE-2911-3	(3)
25.	TARGET ASS'Y	ASE-2911-19	
26.	ROLLOVER WIRE	AS-2806	(2)
27.	ROLLOVER WIRE	AS-2806-1	(5)
28.	OUTHOLE WIRE	AS-2806-21	
29.	ROLLOVER BUTTON	C-900	
30.	FLIPPER & SHAFT ASS'Y	ASE-2214-24	(2)

CONS.—CONSERVATIVE
MED. —MEDIUM
LIB. —LIBERAL

INDICATES MOVABLE POSTS FOR SCORING ADJUSTMENTS

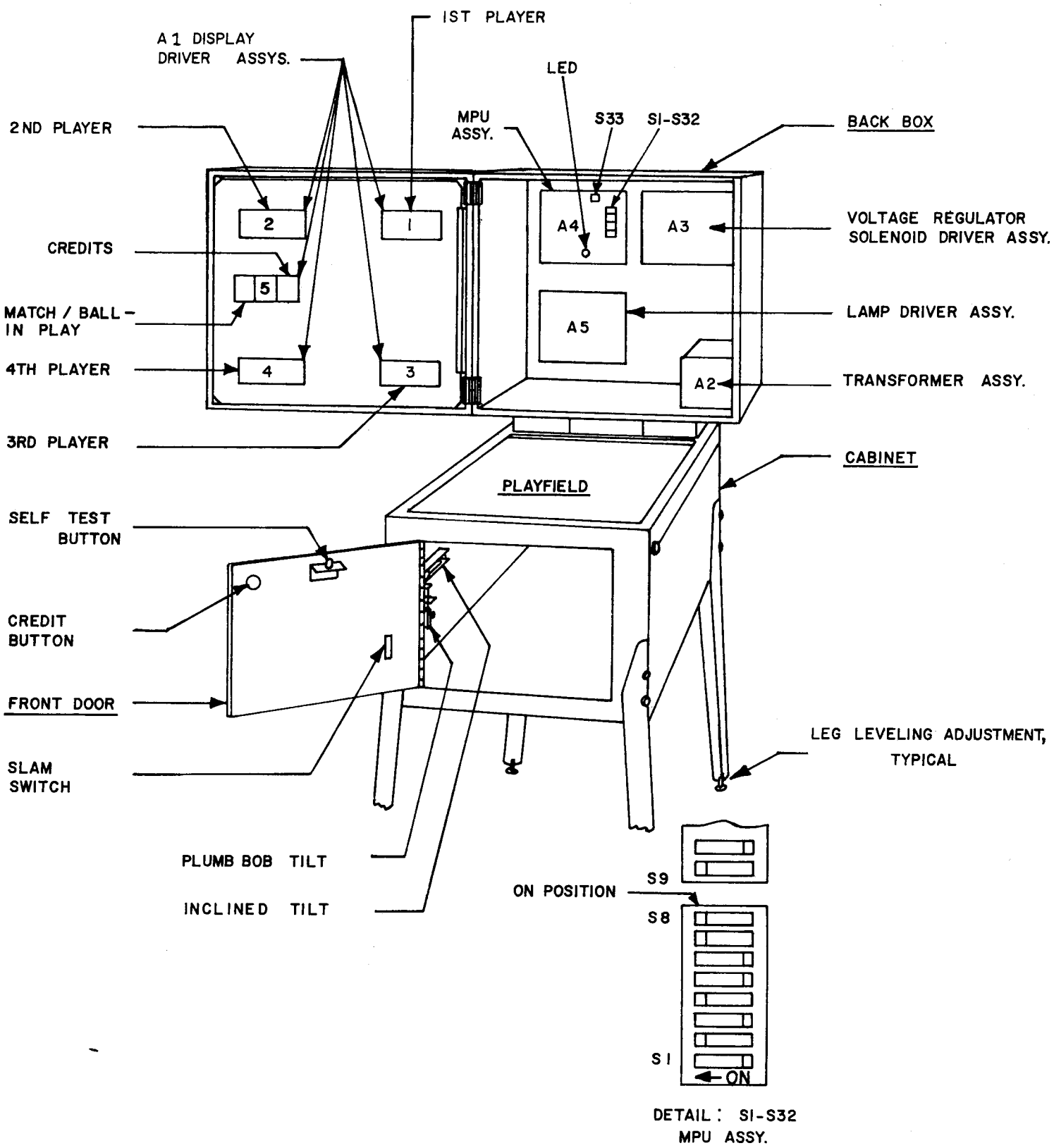

FIGURE III. ELECTRONIC PIN BALL MACHINE

Recommended:

Instruction, Score and Insert Cards for High Score and feature settings to be used on **EIGHT BALL ELECTRONIC, #1118-E.**

3-BALL

REPLAYS

Instruction Card	M-1508-69-A
Score Card	M-1508-69-H
*Score Card	M-1508-69-AQ

1 Replay at 180,000
1 Replay at 340,000
1 Replay at 560,000

EXTRA BALL

Instruction Card	M-1508-69-E
Score Card	M-1508-69-AH

1 Extra Ball at 130,000
1 Extra Ball at 240,000

5-BALL

REPLAYS

Instruction Card	M-1508-69-A
Score Card	M-1508-69-G
*Score Card	M-1508-69-AP

1 Replay at 270,000
1 Replay at 430,000
1 Replay at 650,000

EXTRA BALL

Instruction Card	M-1508-69-E
Score Card	M-1508-69-AN

1 Extra Ball at 210,000
1 Extra Ball at 430,000

*USE FOR END OF GAME REPLAY AWARD. USE WITH INSERT CARDS (7), M-1508-68B

(ALL PLAYFIELD POSTS IN MEDIUM POSITION)

ADDITIONAL CARDS

REPLAYS

M-1508-69-W	120,000	380,000	
M-1508-69-X	140,000	400,000	
M-1508-69-Y	160,000	420,000	
M-1508-69-Z	180,000	440,000	
M-1508-69-AA	200,000	460,000	
M-1508-69-AB	220,000	480,000	
M-1508-69-AC	240,000	500,000	
M-1508-69-AD	260,000	520,000	
M-1508-69-AE	280,000	520,000	
M-1508-69-I	140,000	300,000	520,000
M-1508-69-J	150,000	310,000	530,000
M-1508-69-K	160,000	320,000	540,000
M-1508-69-L	170,000	330,000	550,000
M-1508-69-M	190,000	350,000	570,000
M-1508-69-N	200,000	360,000	580,000
M-1508-69-O	210,000	370,000	590,000
M-1508-69-P	220,000	380,000	600,000
M-1508-69-Q	230,000	390,000	610,000
M-1508-69-R	240,000	400,000	620,000
M-1508-69-S	250,000	410,000	630,000
M-1508-69-T	260,000	420,000	640,000
M-1508-69-U	280,000	440,000	660,000
M-1508-69-V	290,000	450,000	670,000

EXTRA BALL

M-1508-69-AF	110,000	220,000
M-1508-69-AG	120,000	230,000
M-1508-69-AI	140,000	250,000
M-1508-69-AJ	160,000	270,000
M-1508-69-AK	190,000	420,000
M-1508-69-AL	200,000	420,000
M-1508-69-AM	230,000	450,000
M-1508-69-AO	250,000	470,000

INSTRUCTION CARD, NOVELTY

M-1508-69-F

BLANKS (3)

High Score to Date Recommended levels:
(Reset Periodically)

3-Ball	640,000
5-Ball	730,000

INSTRUCTION CARD OPTIONS

SEE PAGE 11

THIS PAGE LEFT BLANK INTENTIONALLY

VIII. ROUTINE MAINTENANCE ON LOCATION:

Self-Test routines are written into the game design. They are particularly useful for routine maintenance. The tests are described below. The first test is automatic and occurs on power-up. This test causes the MPU module A4 to examine itself for failures. Seven flashes of an LED indicates proper operation. The second series of self-diagnostic tests causes the MPU to 'exercise' each of the other modules in such a way as to make their faults, if any, obvious. See Figure III and Page ii.

It is recommended that these tests be used several times a week to check out the games before play. If faults are discovered, they may be corrected on location if the operator has a stock of replacement modules. See "Trouble Shooting on Location."

MPU Module Self-Test:

At power on, the LED on the MPU module flashes once. (Flicker-Flash). After a pause, it flashes six more times and goes out. A power-up tune is played to announce game readiness. This indicates proper MPU operating condition and successful completion of the power-up test.

Game Self-Diagnostic Tests:

1. Pressing the Self-Test button inside the door initiates the Self-Test routine. See Figures III and IV. All switched lamps flash off and on continuously.

2. Pressing the Self-Test button again causes each digit on each display to cycle from 0 thru 9, and repeat continuously.

3. Pressing the Self-Test button again causes each solenoid to be energized, one at a time, in a continuous sequence. Hold both flipper buttons 'in' during this test. The number appearing on the Player Score displays is the same as the number assigned to the solenoid. The sound of a solenoid pulling-in as a number appears indicates proper operation. The absence of sound is improper. If sound is absent, see Page 17 for help in Solenoid identification.

4. Pressing the Self-Test button again causes the MPU to search each switch assembly for stuck contacts. If any are found, the number of the first set encountered is flashed on the Player Score displays. The number remains until the fault is cleared. See Page 17 for help in Stuck Switch identification. Other numbers may follow if more stuck contacts are present. If there are no stuck switches, the Match/Ball in Play display flashes '0.'

5. Pressing the Self-Test button eleven more times causes the MPU to step thru the threshold and bookkeeping functions described previously and finally to repeat the power-up test. For more rapid exit to power-up, turn the game off, then on. The game is now ready to play.

After successful completion of the Self Diagnostic Test procedure, set the game up for play. Exercise each rollover, thumper-bumper, slingshot, etc., by hand until each switch assembly on the playfield has been checked for proper operation. If actuating a switch assembly results in intermittent or no response, clean contacts by gently closing them on a clean business card or piece of paper and wiping until they wipe clean. Regap, if necessary, to 1/16". **Do not burnish or file Gold Plated Switch Contacts.**

IX. TROUBLESHOOTING ON LOCATION

The game is designed to make troubleshooting easy. Several simple procedures are given herein that cover the greatest percentage of game failures. They are written for an operator on location and require module replacement. (See Figure III) Symptoms and the action to be taken are given for each type of problem.

If the problem is more complicated and is not solved by following this procedure, more detailed procedures are available from Bally. See the Parts List for ordering information.

FIGURE IV SELF DIAGNOSTIC TEST

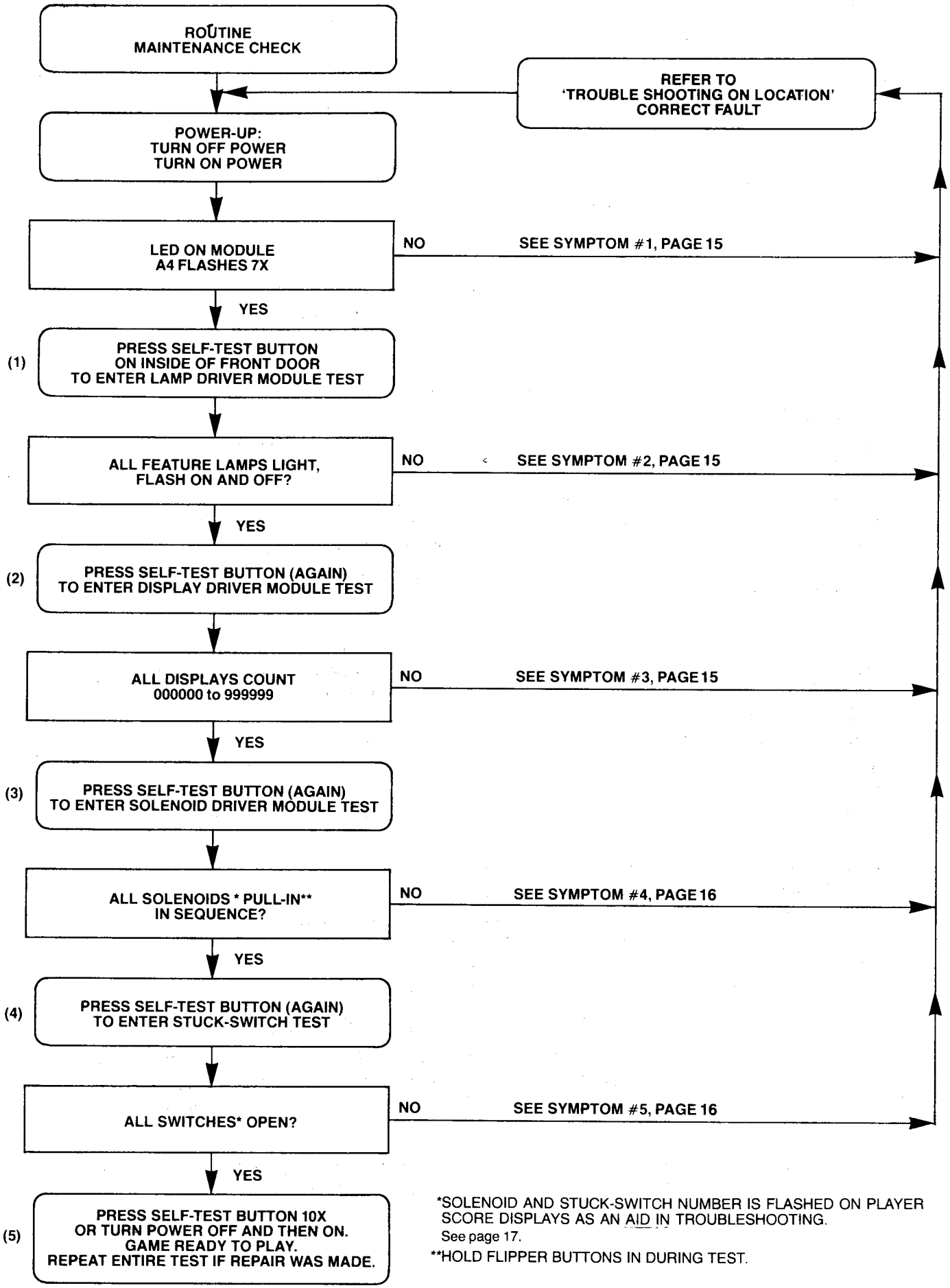

*SOLENOID AND STUCK-SWITCH NUMBER IS FLASHED ON PLAYER SCORE DISPLAYS AS AN AID IN TROUBLESHOOTING.
See page 17.

**HOLD FLIPPER BUTTONS IN DURING TEST.

1A) **SYMPTOM:** Game does not play power-up tune when power is turned on. General Illumination is present.

ACTION: **A)** Turn power OFF. Open back box. Locate light emitting diode (LED) on MPU module A4.

B) Turn Power ON. LED must flash 7X to indicate that module A4 is good. Correct flash sequence is flicker/flash-pause-and then six more flashes and LED goes out.

C. If LED does not come on, or does not flash, or flashes, but less than 7X, turn off power. Replace MPU module A4.

CAUTION: **Replacement MPU Module must have same Part Number or incorrect operation will result! See Parts List for MPU Module Part Number.**

Turn power ON.

D) If game is correct, it is now ready for play. If game is not correct, refer to Module Replacement procedure. (See Parts List.)

2A) **SYMPTOM:** Not all feature lamps light during game play.

ACTION: **A)** With power ON, open front door. Press button (Self-Test switch) once. If the game is correct, **all** feature lamps flash ON and OFF.

B) Carefully raise playfield or open back box to gain access to lamps.

C) Replace bulbs that do not flash.

D) If game is correct, it is now ready for play.

E) If game is not correct, turn power OFF. Replace Lamp Driver Module A5. Turn power ON and repeat A.

F) If game is correct, if is now ready for play.*

G) If game is not correct, turn power OFF. Replace MPU module A4. See CAUTION, 1C. Turn power ON and repeat A.

H) If game is correct, it is now ready for play.* If game is not correct, refer to Module Replacement procedure. (See Parts List.)

2B) **SYMPTOM:** One or some switched lamps always ON.

ACTION: Repeat 2AA, AB, AE, and AF and, if necessary AG & AH.

3A) **SYMPTOM:** Display digits improper on **one** or **several,** but less than all Display Driver module(s), A1. Improper: One or several segments always OFF, digits mottled or several segments or digit(s) always ON.

ACTION: **A)** With power ON, open front door. Press button (Self-Test switch) twice. If the game is correct, each digit on each Display Driver Module A1 (5 used/game) displays the count 1-9 and 0 continuously in all 6 digit positions. Note defective Display Driver modules.

B) Turn power OFF.

CAUTION: High Voltage is supplied to the Display Driver Modules, A1, from the Solenoid Driver/Voltage Regulator Module A3. Wait 30 seconds for High Voltage to Bleed Off.

C) Replace Display Driver module(s) A1. Turn power ON. Repeat A.

D) If game is correct, it is now ready to play.* If game is not correct, refer to Module Replacement procedure. (See Parts List.)

3B) **SYMPTOM:** **All** displays improper (all five display Driver modules). Improper: Digit(s) always on or off/segment(s) always on or off, all displays.

ACTION: **A)** Repeat 3AA, and AB.

B) Replace MPU module A4. See CAUTION NOTE, 1C. Turn power ON. Repeat A.

C) If game is correct, it is now ready to play.* If game is not correct, refer to Module Replacement procedure. (See Parts List.)

3C) **SYMPTOM:** One or several displays always off.

ACTION: **A)** Do 3AA, AB, AC, and AD.

B) Repeat 3BB and BC, if necessary.

4A) **SYMPTOM:** Solenoid(s) do(es) not pull-in during course of game.

ACTION: **A)** With power ON, open front door. Press button (Self-Test switch) three times.

B) If game was correct, each solenoid would be energized. A number is flashed on the Player Score displays as each solenoid is pulsed. Note any numbers that do not have the sound of a solenoid associated. See Solenoid Identification Table, Page 17 and Figure V.

C) Carefully lift the playfield (or open the back box) to gain access to the solenoid. Turn power OFF. Inspect the solenoid.

D) If a lead is broken off, repair. Repeat A & B. If game is correct, it is now ready for play.* If solenoid wiring was correct, turn power OFF.

E) Replace Solenoid Driver/Voltage Regulator module A3. See CAUTION NOTE 3AB.

F) Repeat AA & AB. If game is correct, it is now ready to play.* If game is not correct, turn power OFF.

G) Replace MPU module A4. See CAUTION NOTE, 1C.

H) Repeat A & B. If game is correct, it is now ready to play.* If game is not correct, refer to Module Replacement Procedure. (See Parts List.)

4B) **SYMPTOM:** Solenoid(s) always energized—Note: If impulse solenoids (chimes, ball ejects, slingshots, thumper-bumpers, etc.) are energized continuously, they are subject to damage. Limit troubleshooting to one minute with power ON, followed by **five minutes with power OFF.** Repeat as necessary. Replace damaged solenoids.

ACTION: Do 4AA, AB, AE, AF and if necessary, AG and AH.

5) **SYMPTOM:** Feature (Drop Targets, etc.) does not score.

ACTION: **A)** With power ON, open front door. Press button (Self-Test switch) four times.

B) If the game is correct, Match/Ball in Play display would flash '0.' If a number appears on the Player Score displays, see Switch Assembly Identifcation Table, Page 17 and Figure V.

C) Carefully lift the playfield. Locate the switch assembly identified from the number. Visually inspect the switch assembly. If the contacts are 'stuck', regap them to 1/16″. See section under ADJUSTMENTS. Repeat A & B. If the game is correct, it is now ready to play.* If game is not correct, turn the power OFF.

D) Replace MPU module A4. See CAUTION NOTE 1, C.

E) Repeat A & B. If the game is correct, it is now ready to play.* If the game is not correct, refer to Module Replacement Procedure. (See Parts List.)

6) **SYMPTOM:** Game blows fuse(s) repeatedly.

ACTION: See Module Replacement Procedure. F.O. 560

*Turn power On-Off switch OFF and then ON.

GAME #1118-E EIGHT BALL

SOLENOID IDENTIFICATION TABLE

SELF-TEST NO.	SOLENOID IDENTIFICATION	SELF-TEST NO.	SOLENOID IDENTIFICATION
01	OUTHOLE KICKER	08	LEFT THUMPER-BUMPER
02	KNOCKER	09	RIGHT THUMPER-BUMPER
03	SIDE RETURN KICKER (L)	10	BOTTON THUMPER-BUMPER
04	CHIME 10	11	LEFT SLINGSHOT
05	CHIME 100	12	RIGHT SLINGSHOT
06	CHIME 1000	13	COIN LOCKOUT DOOR
07	CHIME, EXTRA	14	K1 RELAY (FLIPPER ENABLE)

SWITCH ASSEMBLY SELF-TEST DISPLAY NUMBERS

SELF-TEST NO.	SWITCH DESCRIPTION	SELF-TEST NO.	SWITCH DESCRIPTION
01	10 POINT REBOUNDS (3)	27	6/14 TARGET (RIGHT)
02	TOP LEFT TARGET	28	5/13 TARGET (LEFT)
03	BANK SHOT ROLLOVER BUTTON	29	4/12 TOP LANE
06	CREDIT BUTTON	30	3/11 TOP LANE
07	TILT	31	2/10 TOP LANE
08	OUTHOLE	32	1/9 TOP LANE
09	COIN III (RIGHT)	33	RIGHT OUTLANE
10	COIN I (LEFT)	34	BANK SHOT OUTLANE
11	COIN II (MIDDLE) (IF USED)	36	RIGHT SLINGSHOT
16	SLAM	37	LEFT SLINGSHOT
17	SPINNER	38	BOTTOM THUMPER-BUMPER
25	8-BALL TARGET	39	RIGHT THUMPER-BUMPER
26	7/15 RIGHT RETURN LANE	40	LEFT THUMPER-BUMPER

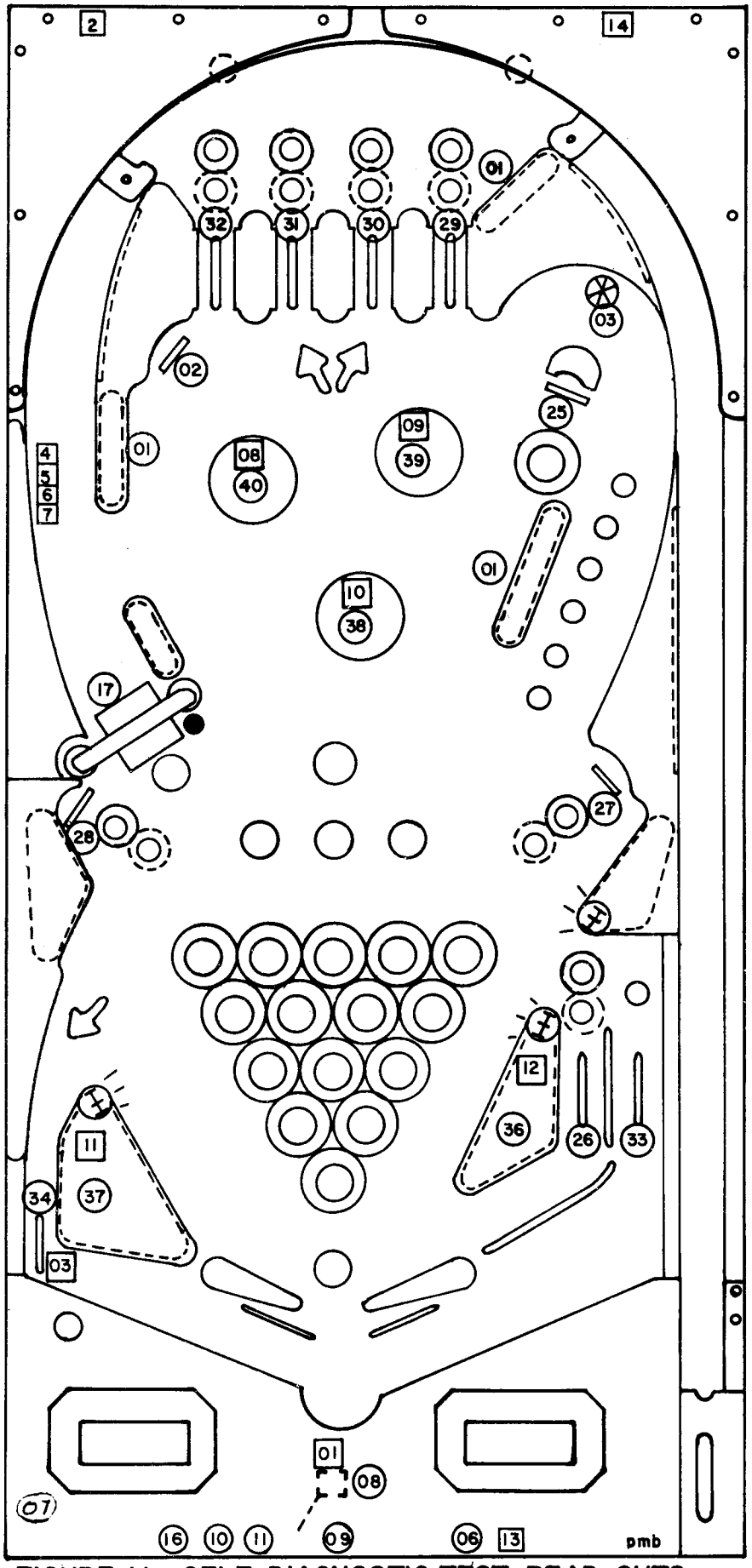

FIGURE V SELF-DIAGNOSTIC TEST READ-OUTS

○ INDICATES SWITCH ASSEMBLY IDENTICATION NUMBERS.
NOTE: Cabinet; 07
Door; 06, 09, 10, 11, 16

□ INDICATES SOLENOID IDENTIFICATION NUMBERS.
NOTE: Cabinet; 04, 05, 06, 07,
Door; 13
Back Box; 02, 14

ASSEMBLY ADJUSTMENTS:

GENERAL:

All switch assemblies consist of leaf springs, contacts, separators, plastic tubing and screws to hold them to the mounting surface. Before attempting to adjust a switch assembly, make sure that these screws are tight. If not, tighten screw closest to the contact end of the leaf spring first. This will prevent the assembly from being secured in such a manner that the leaf springs tend to fan out. In general, all leaf springs are adjusted for a 1/16" gap in the open position and .010" overtravel or wipe in the closed position. All contacts should be in good condition. Unless otherwise instructed, they should be dry or non-lubricated. All contacts should be free of dust and dirt. Contacts, with the exception of the flipper button switch assemblies, are plated to resist corrosion. Filing or burnishing breaks the finish and encourages corrosion. Clean by closing the contacts over a clean piece of paper (e.g. a business card) and wiping gently until the contacts are clean. For the flipper button switch assemblies **ONLY:** Tarnish can be removed with a contact file followed by a burnishing tool. Severely pitted contacts must be replaced as an assembly. In general, contacts need be cleaned or replaced and adjusted only when they are found to be a source of game malfunction.

X. SERVICE PARTS:

A parts catalogue is available upon request. The catalogue is illustrated and lists all replacement parts for each game manufactured by Bally. Requests should be addressed to:

BALLY MANUFACTURING CORPORATION
2640 WEST BELMONT AVENUE
CHICAGO, ILLINOIS 60618
ATTN: PARTS DEPARTMENT

SERVICE HINTS:

The Bally playfield has an improved tuff-coat finish with excellent wearing properties. Its life expectance, as well as play appeal, can be extended by periodic cleaning of the playfield.

DO: Bally recommends you clean your playfield with Wildcat #125 (Wildcat Chemical Co., 1333 W. Seminary Drive, Ft. Worth, Texas 76115). Wildcat #125 is a combination cleaner and polish. Bally has tried and tested this product and found it to be very effective. If Wildcat #125 is not available, Bally suggests you ask your Distributor to order it. Inspect and hand polish the ball in a clean cloth. A chipped ball must be replaced. It can ruin the finish on the playfield in a short period of time.

DON'T: Use water in large quantities, highly caustic cleaners, abrasive cleaners or cleaning pads on the playfield. Do not allow a wax or polish build up. Waxes yellow with age and spoil play appeal.

XI. PARTS LIST
#1118-E EIGHT BALL

MISCELLANEOUS	PART NUMBER
Transformer (Domestic or Export)	E-122-125
Bulbs, #44	E-125-22

ASSEMBLY COILS

Chimes (4)	CN-31-2000
Coin Lockout	FO-36-7000
Flipper Left & Right (2)	AQ-25-500/ 34-5050
Knocker	AR-26-1200
Outhole Kicker	AN-26-1200
Left Kicker	AR-26-1200
Thumper-Bumper (3)	AN-26-1200
Sling-Shot (2)	AN-26-1200

PLAYFIELD PARTS See Figure II

MODULES

Lamp Driver A5	AS-2518-14
Display Driver A1 (5 Used)	AS-2518-15
Solenoid Driver/Voltage Regulator A3	AS-2518-16
MPU A4	AS-2887-4
Transformer & Rectifier A2	AS-2887
Rectifier Board (Part of A2)	AS-2518-18

REPAIR PROCEDURES/AIDS

Module and Component Replacement	F.O. 560
AID (Assistance in Diagnostics) Kit, used with F.O. 560	KIT #485

MODULE COMPONENTS

SEE MODULE PARTS LIST

MODULE COMPONENT STARTER KITS

(Each Kit contains an assortment of the most needed electronic parts for use in Module repair.)

Kit #490—Rectifier Board (Part of A2)
Kit #503—MPU Board A4 (Less Memory U1-U6)
Kit #492—Solenoid Driver/Voltage Regulator A3
Kit #493—Display Driver A1
Kit #494—Lamp Driver A5

AS-2518-17 MPU MODULE

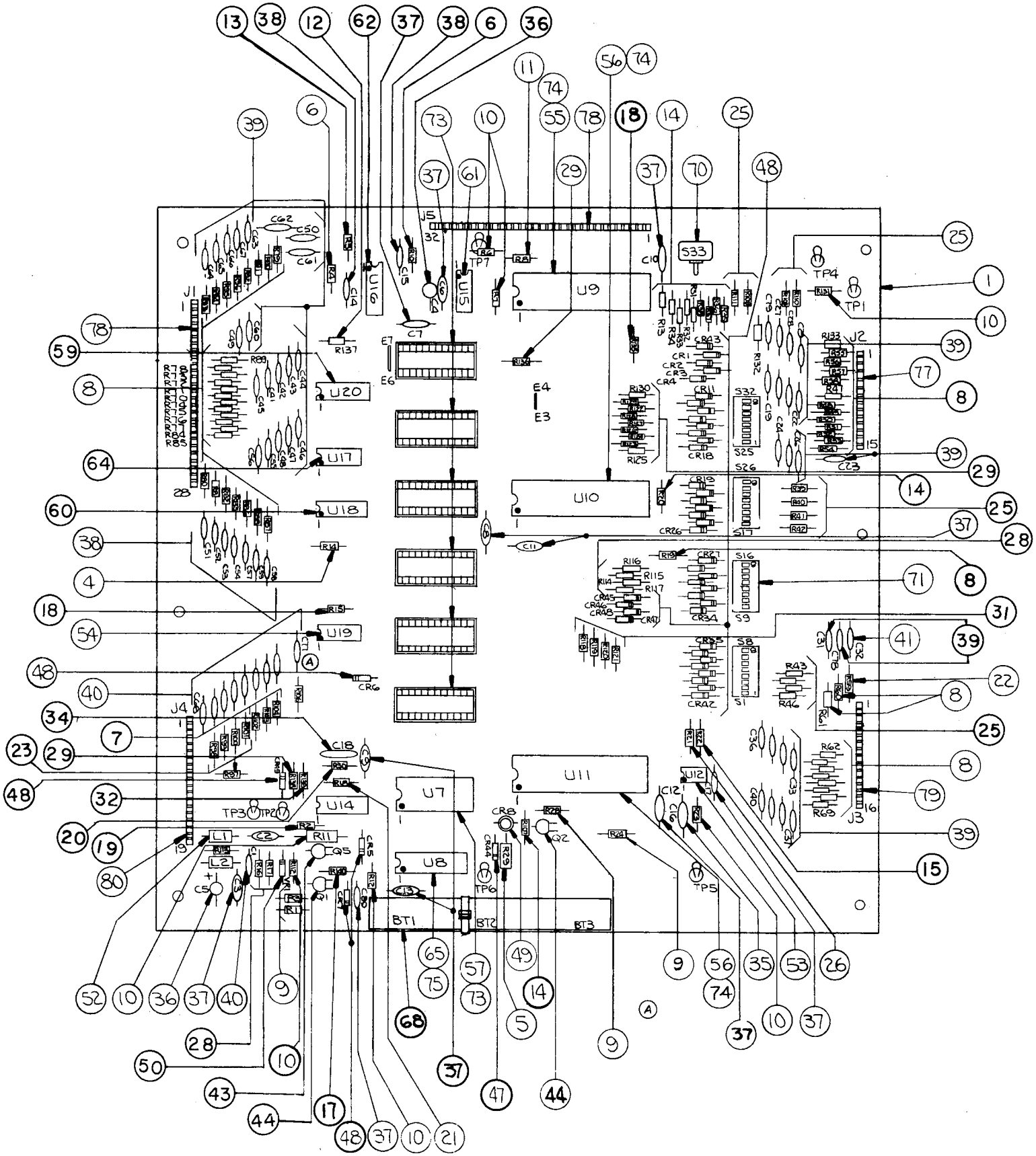

A4: MPU MODULE
COMPONENT PARTS LIST

ITEM	REFERENCE DESIGNATION	BALLY PART #	DESCRIPTION
1	A4 (see note 1)	AS-2887-4	MPU Module Complete. 8-Ball
2	A4 (see note 2)	AS-2518-17	MPU Module less Program Memory, U1-6 incl.
3-32	See Schematic		Resistors, See schematic for value.
34	C18	E-00586-0019	Capacitor, .05 MFD, 100V
35	C16	E-00586-0081	Capacitor, .1 MFD, 100V
36	C4, C5	E-00586-0073	Capacitor, 4.5 MFD, 25V
37	C3, C6-C13, C17	E-00586-0065	Capacitor, .01 MFD, 500V
38	C14, C15, C79, C41-C67	E-00586-0067	Capacitor, 470 PFD, 1kv
39	C19-C31, C78, C33-C40	E-00586-0069	Capacitor, 390 PFD, 1kv
40	C1, C2, C68-C77	E-00586-0075	Capacitor, 820 PFD, 1kv
41	C32	E-00586-0077	Capacitor, 3000 PF, 1kv
43	Q5	E-00585-0023	Transistor PNP (MPS-3702)
44	Q1, Q2	E-00585-0031	Transistor (2N3904)
47	CR44	E-00587-0006	Diode (IN4004)
48	CR1-CR7, CR11-CR43, CR45-CR48	E-00587-0014	Diode (IN4148)
49	CR8	E-00679	LED (Green)
50	VR1	E-00598-0008	Diode Zener (8.2V, IN9598)
52	L1, L2	E-00604-0003	Inductor, 22 Micro Hy.
53	U12	E-00620-0004	Timer (555)
54	U19	E-00620-0005	Quad 2 Input (4011)
55	U9	E-00620-0028	MPU I.C. (6800)
56	U10, U11	E-00620-0029	PIA I.C. (6820)
57	U7	E-00620-0030	RAM I.C. (6810)
59	U20	E-00620-0032	HEX Buffer I.C. (14502B)
60	U14, U18	E-00620-0033	HEX Inverter (4049B)
61	U15	E-00620-0034	Quad Memory Driver (MC3459L)
62	U16	E-00620-0035	Dual Monostable (9602)
64	U17	E-00620-0041	Quad 2 Inputs (74L00N)
65	U8	E-00620-0042	RAM (C MOS, P5101L-3)
68	BT1, BT2, BT3	E-00628-0002	Battery
70	S33	E-00658-0001	Push Button Switch
71	S1-S8, S9-S16, S17-S24, S25-S32	E-00677	DIP Switch
73		E-00712	24 Pin Socket
74		E-00712-0001	40 Pin Socket
75		E-00712-0003	22 Pin Socket
77	J2	E-00715	15 Pin Wafer Connector
78	J4, J5	E-00715-0004	28 Pin Wafer Connector
79	J3	E-00715-0017	16 Pin Wafer Connector
80	J1	E-00715-0018	19 Pin Wafer Connector
81	J5	E-00715-0023	4 Pin Wafer Connector

NOTE 1:
When ordering, fill in dash number. For example, AS-2887-1: FREEDOM, AS-2887-2: NIGHT RIDER, AS-2887-3: EVEL KNIEVEL

NOTE 2:
Order replacement memory chips U1-U6, by specifying game, socket and part number stamped on chip.

AS-2518-14 LAMP DRIVER MODULE

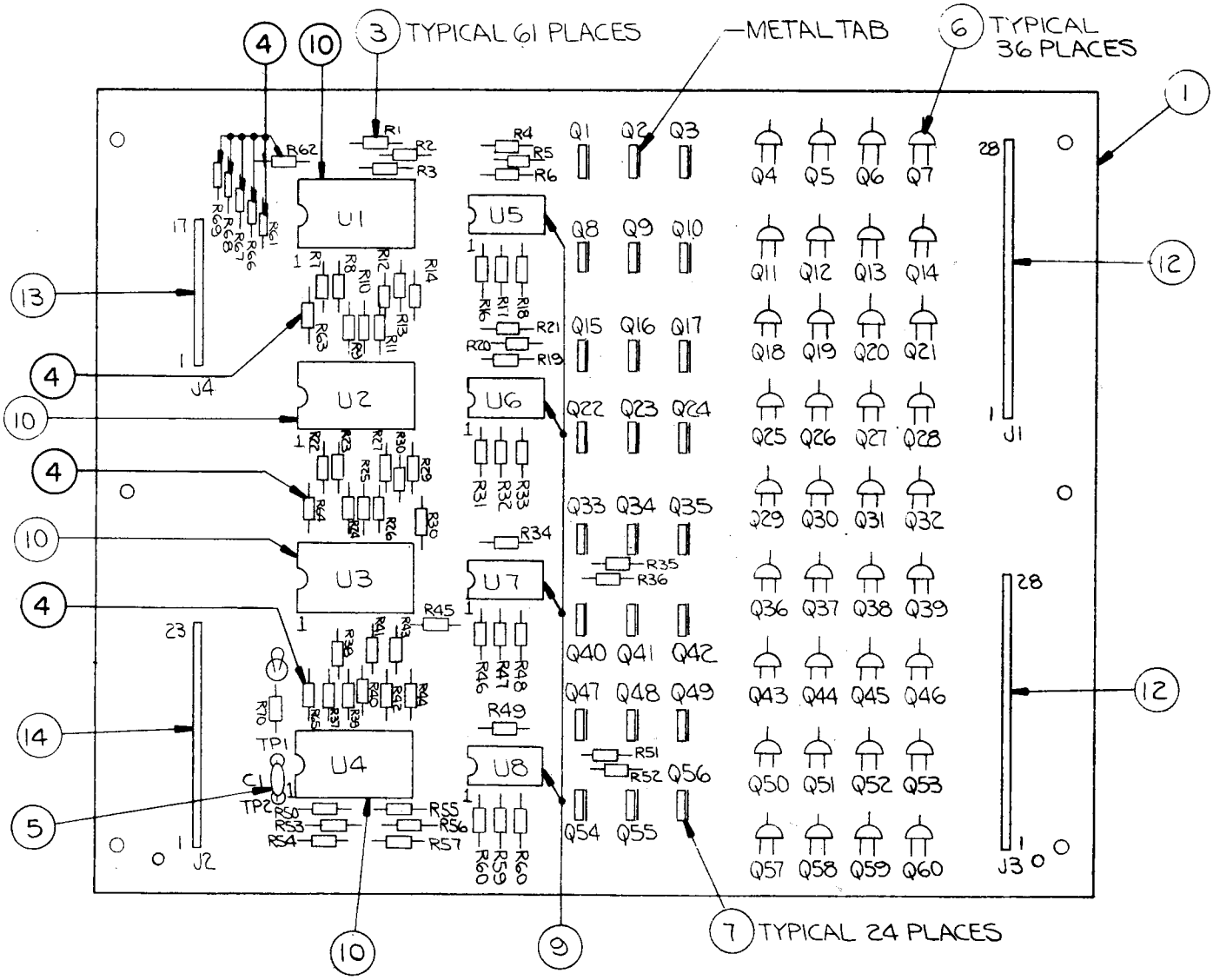

A5: LAMP DRIVER MODULE
COMPONENT PARTS LIST

ITEM	REFERENCE DESIGNATION	BALLY PART #	DESCRIPTION
1	A5	AS-2518-14	Lamp Driver Module, Complete
3	R1-R60, R70	E-00105-0237	Resistor, 2kΩ, 5%, ¼W
4	R61-R69	E-00105-0256	Resistor, 2.2MΩ, ¼W
5	C1	E-00586-0065	Capacitor, .01 MFD, 500V
6	Q4-Q7, Q11-Q14, Q18-Q21, Q25-Q32, Q36-Q39, Q43-Q46, Q50-Q53, Q57, Q58	E-00585-0014	SCR, 2N5060
7	Q1-Q3, Q8-Q10, Q15-Q17, Q22-Q24, Q33-Q35, Q40-Q42, Q47-Q49, Q54-Q56	E-00585-0029	SCR, MCR106-1
9	U5-U8	E-00620-0007	I.C., Buffer, CD4050AE
10	U1-U4	E-00620-0037	I.C., Decoder, 14514B
12	J1, J3	E-00715-0004	28 Pin Wafer Connector
13	J1	E-00715-0013	17 Pin Wafer Connector
14	J4	E-00715-0014	23 Pin Wafer Connector

AS-2518-15 DISPLAY DRIVER MODULE

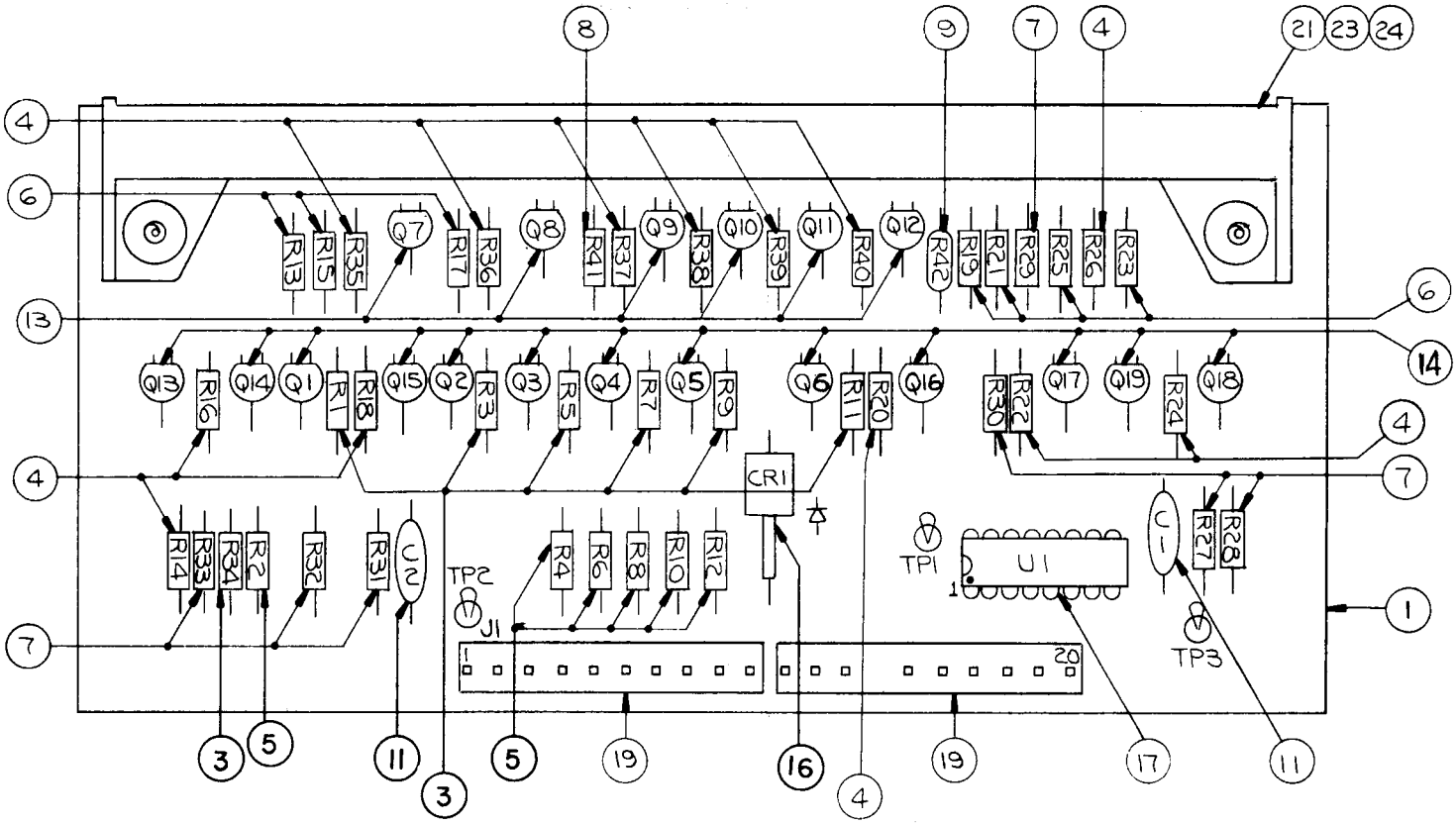

A1: DISPLAY DRIVER MODULE
COMPONENT PARTS LIST

ITEM	REFERENCE DESIGNATION	BALLY PART #	DESCRIPTION
1	A1	AS-2518-15	Display Driver Module, Complete
3	R1, R3, R5, R7, R9, R11, R34	E-00105-0226	Resistor, 100K, ¼W
4	R14, R16, R18, R20, R22, R24, R26, R35-R40	E-00105-0227	Resistor, 300K, ¼W
5	R2, R4, R6, R8, R10, R12	E-00105-0228	Resistor, 9.1K, ¼W
6	R13, R15, R17, R19, R21, R23, R25	E-00105-0229	Resistor, 1.5K, ¼W
7	R27-R33	E-00105-0230	Resistor, 1K, ¼W
8	R41	E-00105-0231	Resistor, 39K, ¼W
9	R42	E-00105-0271	Resistor, 240K, ¼W
11	C1, C2	E-00586-0065	Capacitor, .01 MFD, 500V
13	Q7-Q12	E-00585-0032	Transistor, 2N5401
14	Q1-Q6, Q13-Q19	E-00585-0033	Transistor, MPS-A42
16	CR1	E-00598-0007	Zener Diode, 110V, 1W, IN3045A, IM110Z.S10
17	U1	E-00620-0038	I.C. Decoder, 14543B
19	J1, J2	E-00715-0011	10 Pin Wafer Connector
21	DS1	E-00680	Digital Display Panel
23		P-02399	Display Mounting (Top)
24		P-02399-0001	Display Mounting (Bottom)

AS-2518-16 SOLENOID DRIVER/VOLTAGE REGULATOR MODULE

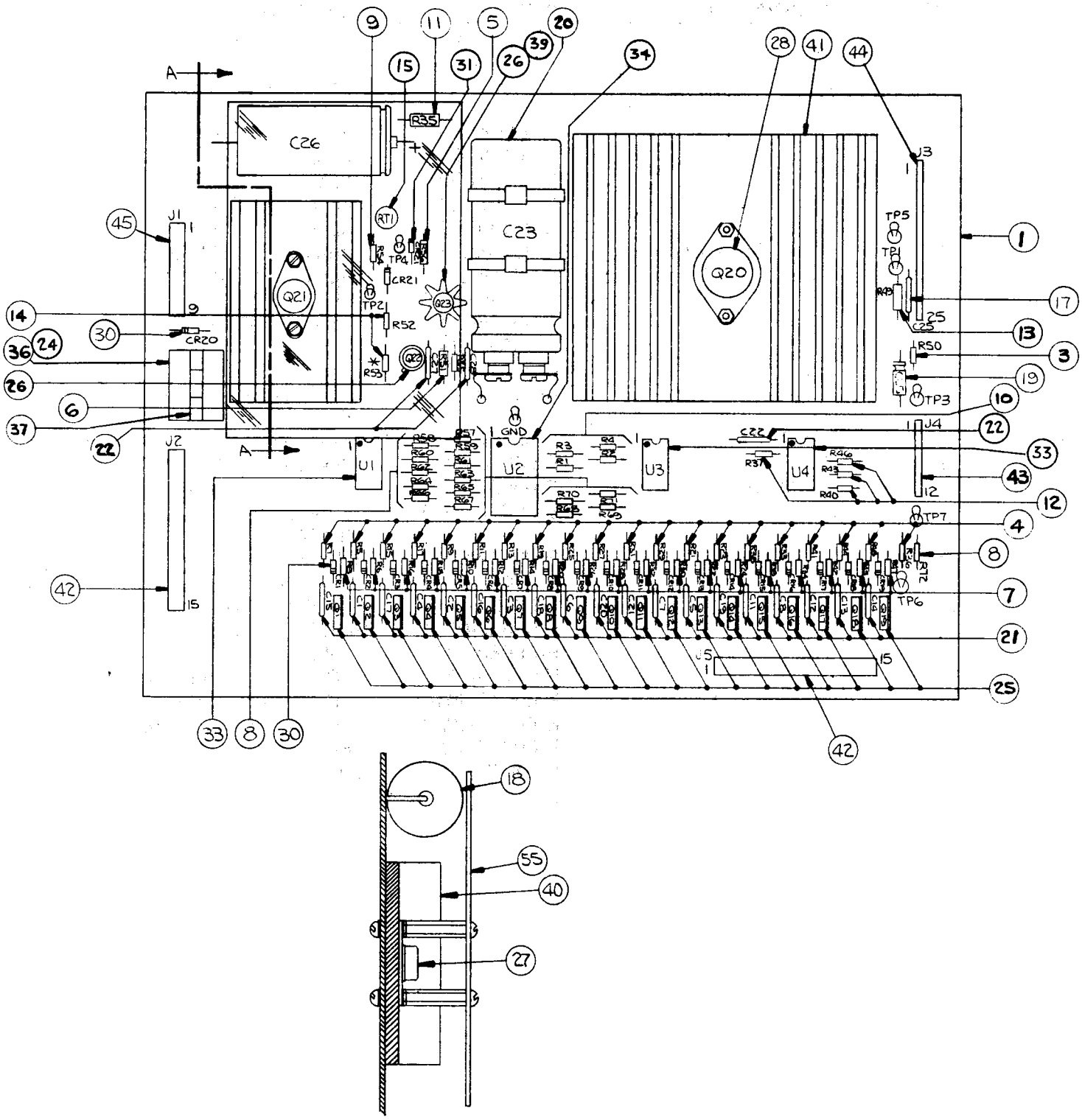

A3: SOLENOID DRIVER/VOLTAGE REGULATOR MODULE
COMPONENT PARTS LIST

ITEM	REFERENCE DESIGNATION	BALLY PART #	DESCRIPTION
1	A3	AS-2518-16	Solenoid Driver/Voltage Regulator Module, Complete
3-14	Resistors		Resistor, See Schematic for value.
15	RT1	E-00599-0014	Pot. (Linear) 25K
17	C25	E-00586-0014	Capacitor, 1 MFD, 20V
18	C26	E-00586-0059	Capacitor, 160 MFD, 350V
19	C24	E-00586-0063	Capacitor, 2 MFD @ 25V
20	C23	E-00586-0062	Capacitor, 11700 MFD, 20V
21	C1-C8, C11-C21	E-00586-0064	Capacitor, .002 MFD, 1kv
22	C22, C27, C28	E-00586-0065	Capacitor, .01 MFD, 500V
24	K1	E-00146-0791	Relay
25	Q1-Q19	E-00585-0034	Transistor, SE9302
26	Q22, Q23	E-00585-0041	Transistor, 2N3440
27	Q21	E-00585-0042	Transistor, 2N3584
28	Q20	E-00710	+5V Regulator, LAS1405 or 78H05KC or LM323K
30	CR1-CR21	E-00587-0015	Diode (IN4004)
31	VR1	E-00598-0010	Diode, Zener 140V, IN5275A
33	U1, U3, U4	E-00681	I.C. Transistor Array, CA3081
34	U2	E-00620-0039	I.C. Binary to 1/16 Decoder, 74L154
36		E-00592-0002	Relay Socket
37		M-1839	Relay Holder
39		E-00682	Heat Sink, TO18
40		E-00682-0001	Heat Sink, TO66
41		E-00682-0002	Heat Sink, TO3 Case
42		E-00715-0013	15 Pin Wafer Connector
43		E-00715-0016	12 Pin Wafer Connector
44		E-00715-0020	25 Pin Wafer Connector
45		E-00715-0021	9 Pin Wafer Connector
55		M-1837	Shield-Plexiglass

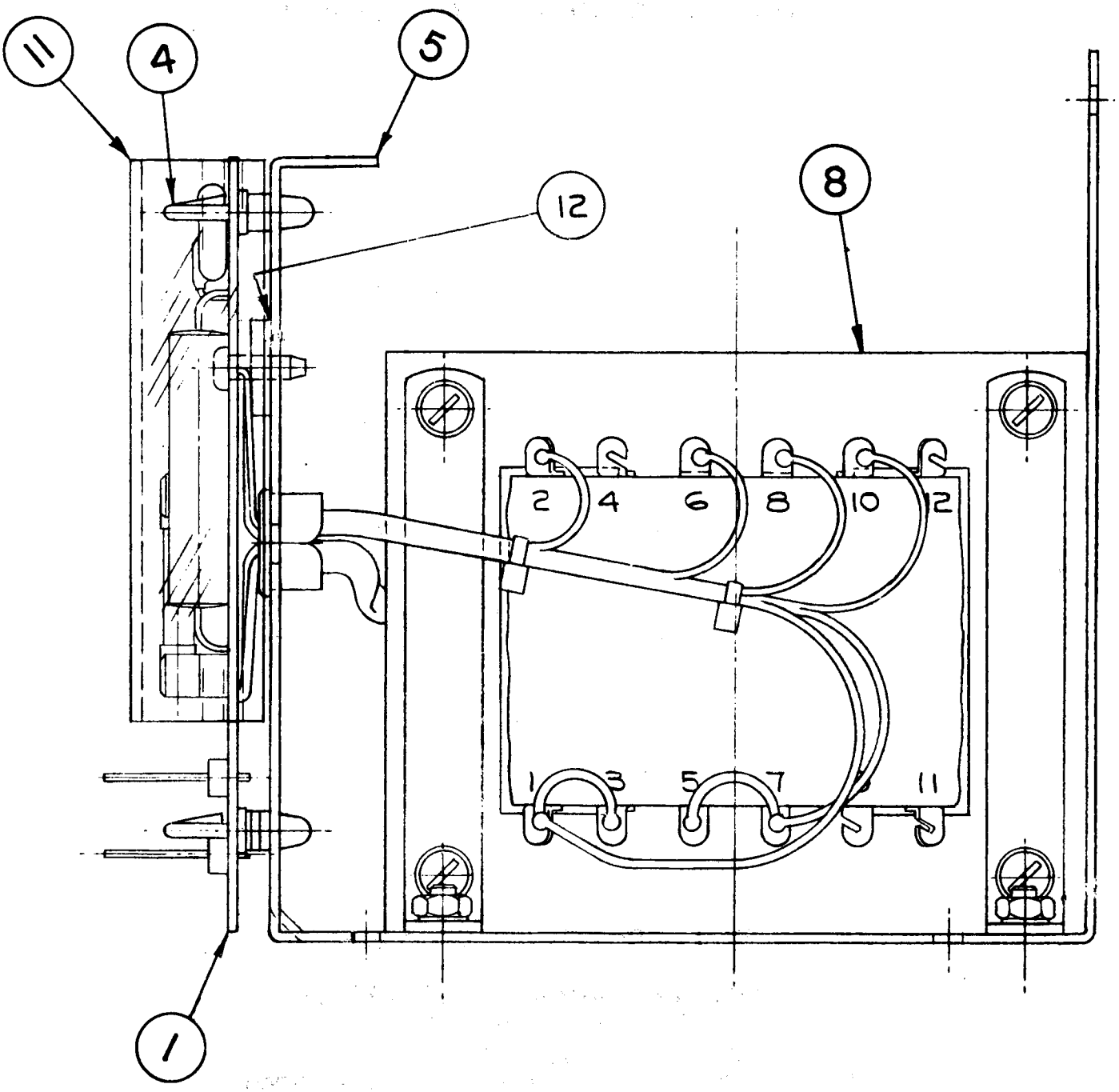

A2: POWER TRANSFORMER MODULE
COMPONENT PARTS LIST

ITEM	REFERENCE DESIGNATION	BALLY PART #	DESCRIPTION
0	A2	AS-2877	Power Transformer Module, Complete
1		AS-2518-18	Rectifier Board Assembly
4		M-1829a	Circuit Board Support
5		A-3840b	Mounting Plate & Stud Assembly
8		E-00122-0125c	Transformer 120/240V, 50/60 Hz
11		P-2692b	P.C.B Cover
12		M-1834	Heat Sink Compound

AS-2518-18 RECTIFIER BOARD ASSEMBLY

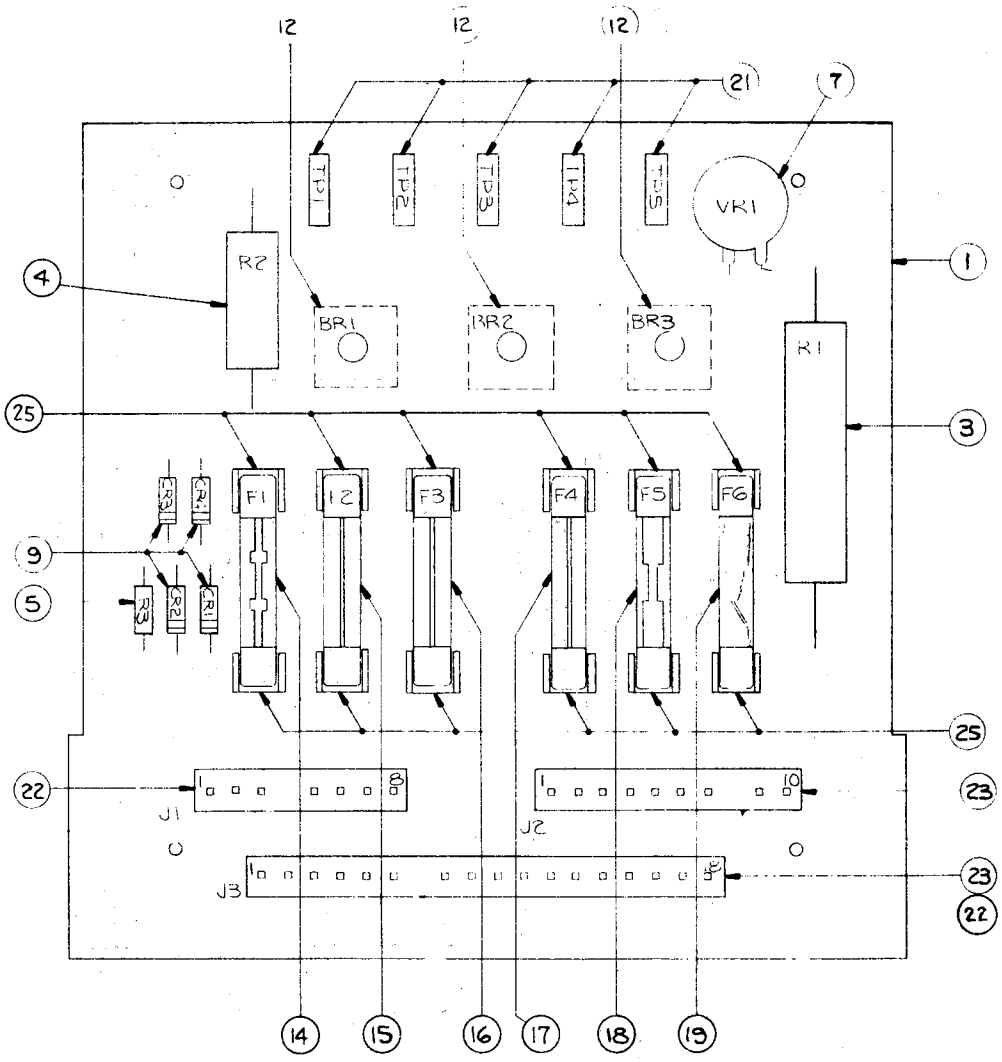

RECTIFIER BOARD ASSEMBLY
(Part of)
A2: POWER TRANSFORMER MODULE
COMPONENT PARTS LIST

ITEM	REFERENCE DESIGNATION	BALLY PART #	DESCRIPTION
1	P/O A2	AS-2518-18	Rectifier Board Assembly, Complete
3	R1	E-00104-0092	Resistor, 10%, 600 Ohm, 10W
4	R2	E-00104-0091	Resistor, 25 Ohm, 5W
5	R3	E-00105-0226	Resistor, 5%, 100K Ohm, ¼W
7	VR1	E-00623	Varistor
9	CR1, CR2, CR3, CR4	E-00587-0006	Diode (IN4004)
12	BR1, BR2, BR3	E-00602-0003	Bridge Rectifier (VJ248 VARO)
14	F1	E-00133-0010	Fuse, 10A, 32V, 3AG
15	F2	E-00133-0028	Fuse, 3/4A, 250V, 3AG, S.B.
16	F3	E-00133-0004	Fuse, 4A, 32V, 3AG
17	F4	E-00133-0005	Fuse, 5A, 32V, 3AG
18	F5	E-00133-0027	Fuse, 20A, 32V, 3AG
19	F6	E-00133-0024	Fuse, 3A, 3AG, S.B.
21		E-00684	Test Point
22	J1, J3	E-00715-0010	8 Pin Wafer Connector
23	J2, J3	E-00715-0011	10 Pin Wafer Connector
25		E-00148-0021	Fuse Clips

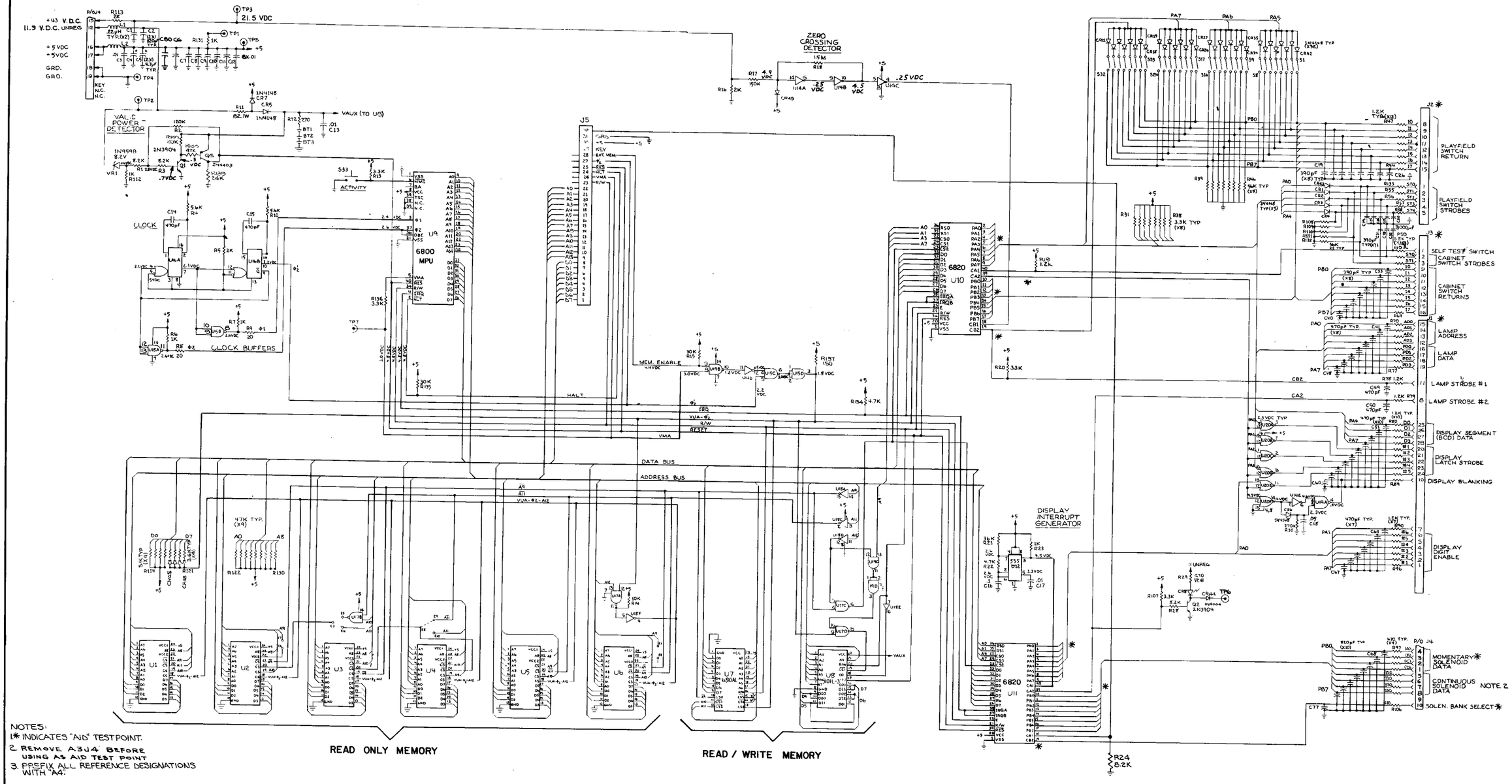

NOTES:
1. ✱ INDICATES "A1S" TESTPOINT.
2. REMOVE A3J4 BEFORE USING AS AID TEST POINT
3. PREFIX ALL REFERENCE DESIGNATIONS WITH "A4".

NO.	LET.	CHANGE	DATE	BY	CK.

REMOVE ALL BURRS

TOLERANCES ON DIMENSIONS UNLESS OTHERWISE SPECIFIED
FRACTIONS ± 1/64
DECIMALS ± .005
ANGLES ± 1°

DO NOT SCALE DRAWING

ALL DESIGN, OPERATIVE AND PROCESS DATA PERTAINING TO THE ARTICLE SHOWN ON THIS SHEET IS THE PROPERTY OF BALLY MFG. CORP., CHICAGO, ILL. THIS INFORMATION IS DISCLOSED IN CONFIDENCE AND IS NOT TO BE COPIED, REPRODUCED, REVEALED TO OR APPROPRIATED BY OTHERS, IN PART OR IN WHOLE, WITHOUT THE EXPRESS CONSENT OF THE OWNERS. THE PRINT IS LOANED AND MUST NOT BE USED IN ANY MANNER DETRIMENTAL TO THE INTEREST OF THE OWNERS, AND MUST BE RETURNED ON DEMAND.

DR. BY 2-77
CK. BY 2-77
APP'D BY
DATE FEB 21 1977

Bally MANUFACTURING CORP. 1094-E
2640 BELMONT AVENUE
CHICAGO, ILLINOIS

PRINT CONTROL | PROD. COMP. | PUR. COMP. | ENG. COMP. | TOOL DESIGN | QUAL. COMP. | ING. REP. | TECH. REP. | MAGR. REP. | TOTAL | SCALE

NAME (A4) MPU CONTROL BOARD SCHEMATIC
FINISH:
HARDENING:
MATERIAL
ASSEM. NO. USED ON/W
PART NO. W-1181-2c

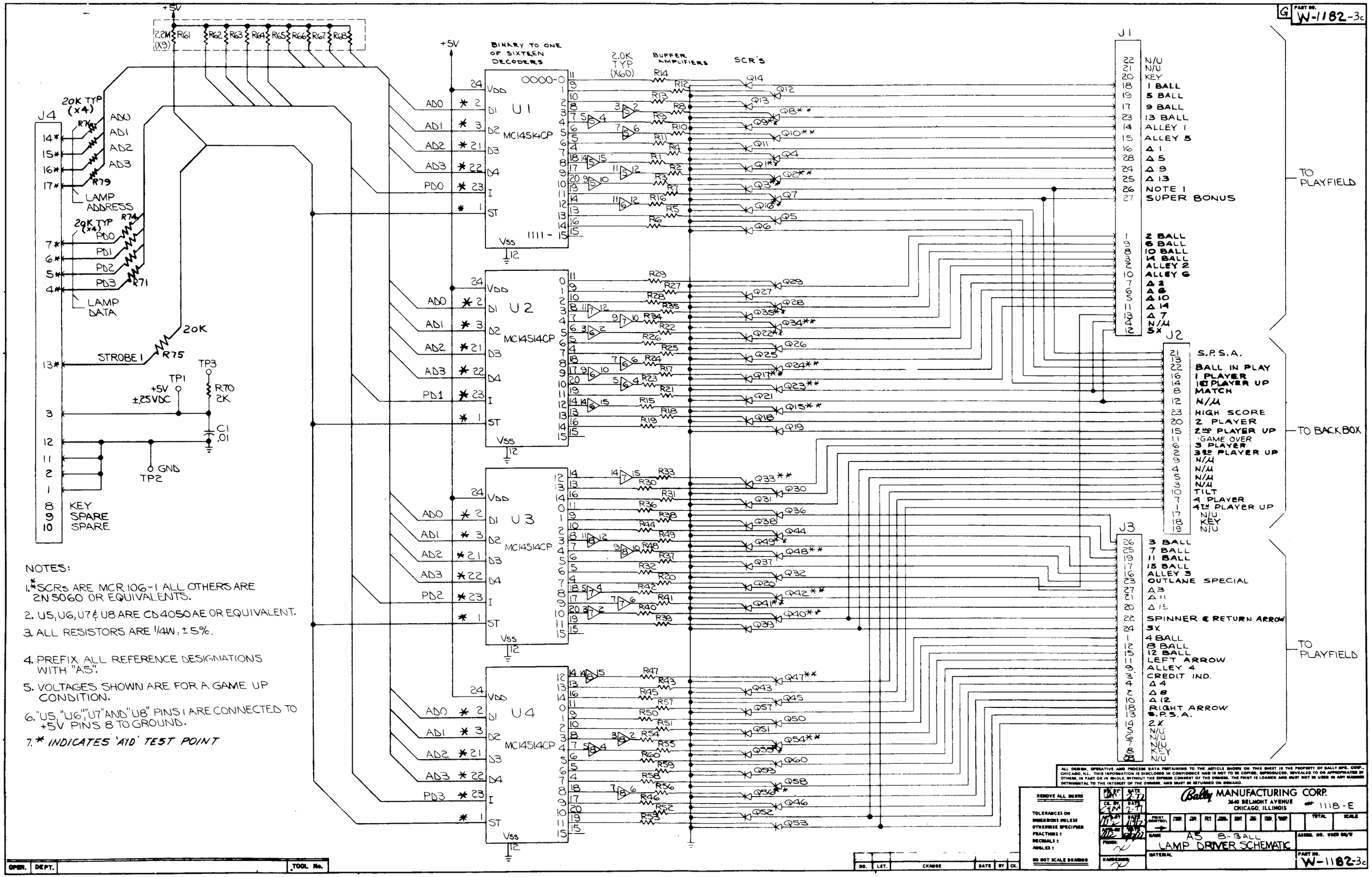
G
PART NO. W-1182-3c
+5V
2.2M (X9)
R61 R62 R63 R64 R65 R66 R67 R68
BINARY TO ONE OF SIXTEEN DECODERS
2.0K TYP (X60)
BUFFER AMPLIFIERS
SCR'S
U1 MC14514CP
U2 MC14514CP
U3 MC14514CP
U4 MC14514CP
VDD
D1
D2
D3
D4
I
ST
Vss
AD0
AD1
AD2
AD3
PD0
PD1
PD2
PD3
J4
20K TYP (X4)
R78
R79
LAMP ADDRESS
R74
R71
LAMP DATA
20K
R75
STROBE 1
TP3
TP1
+5V ±.25VDC
R70 2K
C1 .01
GND
TP2
KEY
SPARE
SPARE
J1
N/U
N/U
KEY
1 BALL
5 BALL
9 BALL
13 BALL
ALLEY 1
ALLEY 5
Δ 1
Δ 5
Δ 9
Δ 13
NOTE 1
SUPER BONUS
2 BALL
6 BALL
10 BALL
14 BALL
ALLEY 2
ALLEY 6
Δ 2
Δ 6
Δ 10
Δ 14
Δ 7
N/U
5X
TO PLAYFIELD
J2
S.P.S.A.
BALL IN PLAY
1 PLAYER
1ST PLAYER UP
MATCH
N/U
HIGH SCORE
2 PLAYER
2ND PLAYER UP
GAME OVER
3 PLAYER
3RD PLAYER UP
N/U
N/U
N/U
N/U
TILT
4 PLAYER
4TH PLAYER UP
N/U
KEY
N/U
TO BACKBOX
J3
3 BALL
7 BALL
11 BALL
15 BALL
ALLEY 3
OUTLANE SPECIAL
Δ 3
Δ 11
Δ 15
SPINNER & RETURN ARROW
3X
4 BALL
8 BALL
12 BALL
LEFT ARROW
ALLEY 4
CREDIT IND.
Δ 4
Δ 8
Δ 12
RIGHT ARROW
S.P.S.A.
2X
N/U
N/U
N/U
KEY
N/U
TO PLAYFIELD
NOTES:
1. *SCRs ARE MCR 106-1 ALL OTHERS ARE 2N5060 OR EQUIVALENTS.
2. U5, U6, U7 & U8 ARE CD4050AE OR EQUIVALENT.
3. ALL RESISTORS ARE 1/4W, ±5%.
4. PREFIX ALL REFERENCE DESIGNATIONS WITH "A5".
5. VOLTAGES SHOWN ARE FOR A GAME UP CONDITION.
6. "U5" "U6" "U7" AND "U8" PINS 1 ARE CONNECTED TO +5V PINS 8 TO GROUND.
7. * INDICATES 'A1D' TEST POINT
ALL DESIGN, OPERATIVE AND PROCESS DATA PERTAINING TO THE ARTICLE SHOWN ON THIS SHEET IS THE PROPERTY OF BALLY MFG. CORP., CHICAGO, ILL. THIS INFORMATION IS DISCLOSED IN CONFIDENCE AND IS NOT TO BE COPIED, REPRODUCED, REVEALED TO OR APPROPRIATED BY OTHERS, IN PART OR IN WHOLE, WITHOUT THE EXPRESS CONSENT OF THE OWNERS. THE PRINT IS LOANED AND MUST NOT BE USED IN ANY MANNER DETRIMENTAL TO THE INTEREST OF THE OWNERS, AND MUST BE RETURNED ON DEMAND.
REMOVE ALL BURRS
TOLERANCES ON DIMENSIONS UNLESS OTHERWISE SPECIFIED
FRACTIONS ±
DECIMALS ±
ANGLES ±
DO NOT SCALE DRAWING
Bally MANUFACTURING CORP.
2640 BELMONT AVENUE
CHICAGO, ILLINOIS
1118-E
A5 8-BALL
LAMP DRIVER SCHEMATIC
PART NO. W-1182-3c
NO. LET. CHANGE DATE BY CK.
OPER. DEPT. TOOL No.

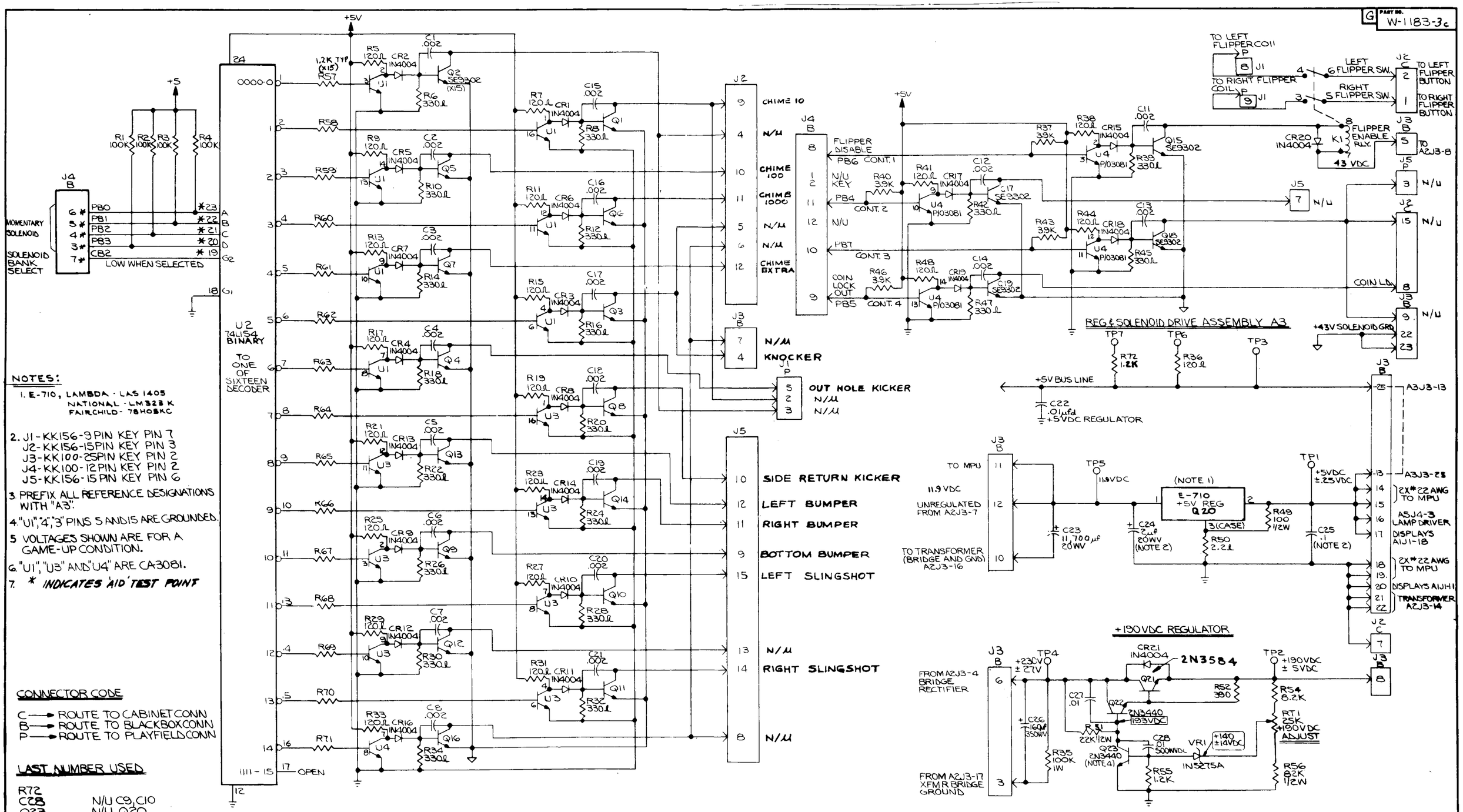
G
PART NO.
W-1183-3c
+5V
+5
U2
74LS154
BINARY
TO ONE OF SIXTEEN DECODER
MOMENTARY SOLENOID
SOLENOID BANK SELECT
LOW WHEN SELECTED
PB0
PB1
PB2
PB3
CB2
OPEN
CHIME 10
N/U
CHIME 100
CHIME 1000
CHIME EXTRA
KNOCKER
OUT HOLE KICKER
SIDE RETURN KICKER
LEFT BUMPER
RIGHT BUMPER
BOTTOM BUMPER
LEFT SLINGSHOT
RIGHT SLINGSHOT
FLIPPER DISABLE
N/U KEY
COIN LOCK OUT
TO LEFT FLIPPER COIL
TO RIGHT FLIPPER COIL
LEFT FLIPPER SW.
RIGHT FLIPPER SW.
TO LEFT FLIPPER BUTTON
TO RIGHT FLIPPER BUTTON
FLIPPER ENABLE RLY.
43 VDC
TO A2J3-8
COIN LO
REG & SOLENOID DRIVE ASSEMBLY A3
+43V SOLENOID GRD
+5V BUS LINE
+5VDC REGULATOR
A3J3-13
A3J3-25
TO MPU
11.9 VDC
UNREGULATED FROM A2J3-7
TO TRANSFORMER (BRIDGE AND GND) A2J3-16
E-710 +5V REG Q20
(NOTE 1)
(NOTE 2)
+5VDC ±.25VDC
2X#22 AWG TO MPU
A5J4-3 LAMP DRIVER
DISPLAYS A1J1-18
DISPLAYS A1J11
TRANSFORMER A2J3-14
+190VDC REGULATOR
FROM A2J3-4 BRIDGE RECTIFIER
FROM A2J3-17 XFMR BRIDGE GROUND
+230V ± 27V
2N3584
2N3440
+190VDC ± 5VDC
+190VDC ADJUST
+14V ±14VDC
1N5275A
NOTES:
1. E-710, LAMBDA - LAS 1405
NATIONAL - LM323K
FAIRCHILD - 78H05KC
2. J1 - KK156-9 PIN KEY PIN 7
J2 - KK156-15 PIN KEY PIN 3
J3 - KK100-25 PIN KEY PIN 2
J4 - KK100-12 PIN KEY PIN 2
J5 - KK156-15 PIN KEY PIN 6
3. PREFIX ALL REFERENCE DESIGNATIONS WITH "A3".
4. "U1", "4", "3" PINS 5 AND 15 ARE GROUNDED.
5. VOLTAGES SHOWN ARE FOR A GAME-UP CONDITION.
6. "U1", "U3" AND "U4" ARE CA3081.
7. * INDICATES AID TEST POINT
CONNECTOR CODE
C → ROUTE TO CABINET CONN
B → ROUTE TO BLACKBOX CONN
P → ROUTE TO PLAYFIELD CONN
LAST NUMBER USED
R72
C28
Q23
CR21
VR1
N/U C9, C10
N/U Q20
Bally MANUFACTURING CORP.
2640 BELMONT AVENUE
CHICAGO, ILLINOIS
8-BALL SOLENOID DRIVER
VOLTAGE REGULATOR SCHEMATIC
W-1183-3c
OPER.
DEPT.
DESCRIPTION
TOOL No.

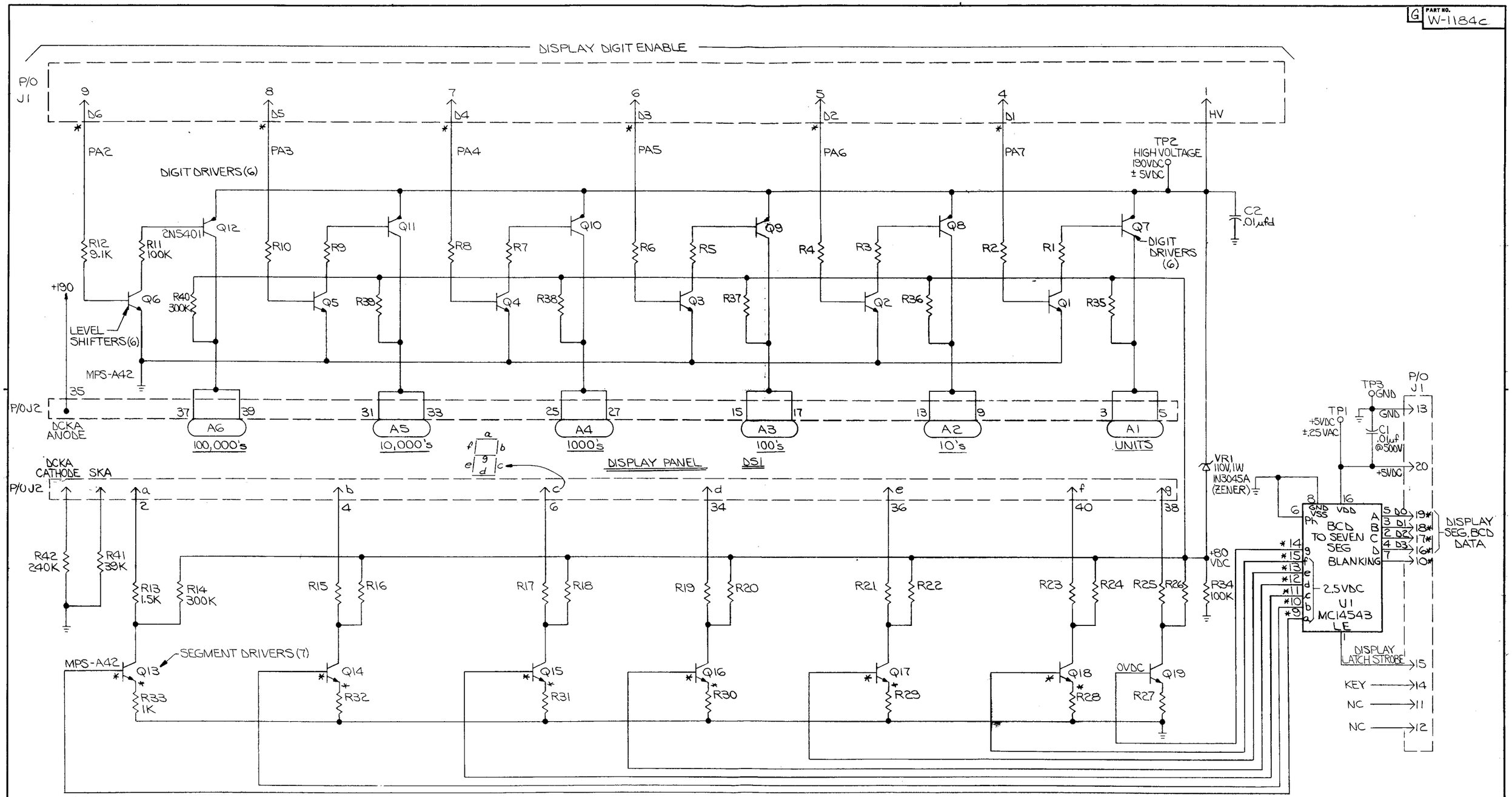

NOTES:

1. UNLESS OTHERWISE SPECIFIED ALL RESISTORS ARE ± 5%, 1/4W.
2. PREFIX ALL REFERENCE DESIG. WITH ASSEMBLY REFERENCE DESIG. "A1"
3. * INDICATES 'AID' TEST POINT.

OPER.	DEPT.	DESCRIPTION	TOOL No.

NO.	LET.	CHANGE	DATE	BY	CK.
1	—	ADDED NOTE 3 & ASTERISKS	11-13-76	S.T.	WB

DIE SIZE — C.C. — FT. PER M — LBS. PER M —

ALL DESIGN, OPERATIVE AND PROCESS DATA PERTAINING TO THE ARTICLE SHOWN ON THIS SHEET IS THE PROPERTY OF BALLY MFG. CORP., CHICAGO, ILL. THIS INFORMATION IS DISCLOSED IN CONFIDENCE AND IS NOT TO BE COPIED, REPRODUCED, REVEALED TO OR APPROPRIATED BY OTHERS, IN PART OR IN WHOLE, WITHOUT THE EXPRESS CONSENT OF THE OWNERS. THE PRINT IS LOANED AND MUST NOT BE USED IN ANY MANNER DETRIMENTAL TO THE INTEREST OF THE OWNERS, AND MUST BE RETURNED ON DEMAND.

REMOVE ALL BURRS

TOLERANCES ON DIMENSIONS UNLESS OTHERWISE SPECIFIED
FRACTIONS ±
DECIMALS ±
ANGLES ±

DO NOT SCALE DRAWING

DR. BY 9-76 DATE
CK. BY DATE
APP'D BY 9-27-76 DATE
APP'D BY 10-15-76 DATE

Bally MANUFACTURING CORP
2640 BELMONT AVENUE
CHICAGO, ILLINOIS
OCT 6 1976
#1094-E
#1086-E

PRINT CONTROL | PROD. CONT. | PUR. CONT. | ENG. FILE | TOOL DESIGN | COST CONT. | ING. INSP. | TOOL INSP. | MAGN. INSP. | TOTAL | SCALE

FINISH: N

HARDENING: N

NAME: DISPLAY BOARD SCHEMATIC "A1"

ASSEM. NO. USED ON/W: 1118 - E

MATERIAL

PART NO. W-1184c

G PART NO. W-1184c

PART NO. W-1185-1c

TRANSFORMER ASSEMBLY A2

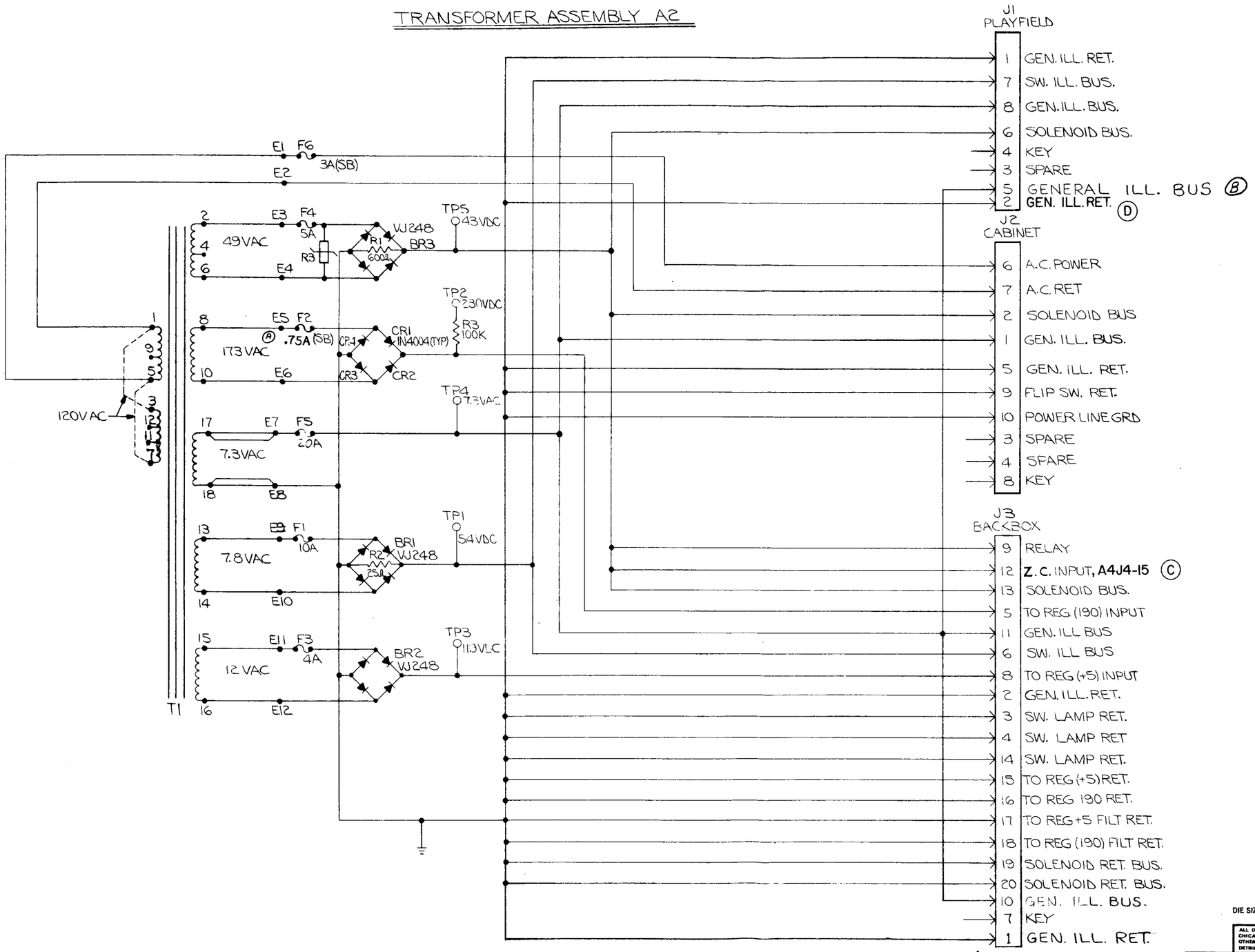

NOTES:

1. WIRE A.C. POWER AND TERMINALS PER TABLE 1.
2. VOLTAGES SHOWN ARE FOR GAME IN POWER-UP CONDITION.
3. PREFIX ALL REFERENCE DESIGNATIONS WITH A2.

TABLE 1
POWER LINE CONNECTIONS

LINE VOLTAGE VRMS A.C.	STRAP TERMINALS	APPLY POWER TO TERMINALS
115	1TO3 AND 9TO11	1 AND 9
120	1TO3 AND 5TO7	1 AND 5
220	3TO5	1 AND 12
240	3TO5	1 AND 7

1118-F

DIE SIZE — C.C. — FT. PER M — LBS. PER M —

ALL DESIGN, OPERATIVE AND PROCESS DATA PERTAINING TO THE ARTICLE SHOWN ON THIS SHEET IS THE PROPERTY OF BALLY MFG. CORP., CHICAGO, ILL. THIS INFORMATION IS DISCLOSED IN CONFIDENCE AND IS NOT TO BE COPIED, REPRODUCED, REVEALED TO OR APPROPRIATED BY OTHERS, IN PART OR IN WHOLE, WITHOUT THE EXPRESS CONSENT OF THE OWNERS. THE PRINT IS LOANED AND MUST NOT BE USED IN ANY MANNER DETRIMENTAL TO THE INTEREST OF THE OWNERS, AND MUST BE RETURNED ON DEMAND.

NO.	LET.	CHANGE	DATE	BY	CK.
2	D	J1-2 READ "GND"	5-20-77	RMS	[illegible]
2	C	J3-12 READ "Z.C. INPUT"	5-20-77	RMS	[illegible]
1	B	ADDED JUMPER J1-5 TO J3-11	5-2-77	JCG	WE
1	A	F2 WAS 5.0A	5-2-77	JCG	WE

OPER.	DEPT.	DESCRIPTION	TOOL No.

REMOVE ALL BURRS

TOLERANCES ON DIMENSIONS UNLESS OTHERWISE SPECIFIED
FRACTIONS ±
DECIMALS ±
ANGLES ±

DO NOT SCALE DRAWING

DR. BY [illegible] DATE 4-26
CK. BY C. BOND DATE 2-11-77
APP'D BY DATE
APP'D BY WE DATE 2/1/77
FINISH:
HARDENING:

Bally MANUFACTURING CORP. #1094-E
FEB 21 1977
2640 BELMONT AVENUE
CHICAGO, ILLINOIS
#1074-E.

PRINT CONTROL → | PRINT CHECK | PROD. CONT. | PROD. ENG. | PROD. DESIGN | QUALITY CONT. | PROD. MGR. | TOOL | MAINT. | TOTAL | SCALE

NAME POWER TRANSFORMER MODULE SCHEMATIC

ASSEM. NO. USED ON/W

MATERIAL

PART NO. W-1185-1c

W-1186-3 c

TABEL A A1J2

FROM	PIN	WIRE
A5J3-6	1	20
A5J2-14	2	12
A2J3-2	3	50
A2J3-11	4	10
A5J2-23	5	97
A5J2-15	6	32
A5J2-22	7	62
A5J2-8	8	93
A5J2-1	9	60
A5J2-2	10	20
A5J2-11	11	95
A5J2-21	12	47
A5J2-10	13	98
A5J2-7	14	91
A5J2-6	15	85
A5J2-20	16	35
A5J2-16	17	34
A2J3-10	18	40
A2J3-1	19	70
A5J2-13	20	53
A5J2-12	21	61
A5J2-4	22	72
A5J2-13	23	84
	24	

A1 INSERT

TO	(PLAYER 1) 1A1 J1	(PLAYER 2) 2A1 J1	(PLAYER 3) 3A1 J1	(PLAYER 4) 4A1 J1	CREDIT DISPLAY 5A1 J1
10 – A3J3-8	1	1	1	1	1
N/U	2	2	2	2	2
N/U	3	3	3	3	3
80 – A4J1-1	4	4	4	4	4
20 – A4J1-2	5	5	5	5	5
30 – A4J1-3	6	6	6	6	6
40 – A4J1-4	7	7	7	7	7
50 – A4J1-5	8	8	8	8	8
58 – A4J1-6	9	9	9	9	9
70 – A4J1-10	10	10	10	10	10
N/U	11	11	11	11	11
N/U	12	12	12	12	12
60 – A3J3-20	13	13	13	13	13
KEY	14	14	14	14	14
85 – A4J1-20	15	31	72 15	67 15	18 15
54 – A4J1-28	16	16	16	16	16
38 – A4J1-27	17	17	17	17	17
25 – A4J1-26	18	18	18	18	18
51 – A4J1-25	19	19	19	19	19
45 – A3J3-17	20	20	20	20	20
	A4J1-21	A4J1-22	A4J1-23	A4J1-24	

	TO		SWITCHED ILL. BUS 5.4V.D.C.
12	A5J2-14	P. UP 1	
32	A5J2-15	P. UP 2	
20	A5J2-2	P. UP 3	
60	A5J2-1	P. UP 4	
47	A5J2-21	SHOOT AGAIN	
95	A5J2-11	GAME OVER	
98	A5J2-10	TILT	
34	A5J2-16	N PLAY 1	
35	A5J2-20	N PLAY 2	
85	A5J2-6	N PLAY 3	
91	A5J2-7	N PLAY 4	
97	A5J2-23	HIGH SCORE	
93	A5J2-8	MATCH	
62	A5J2-22	BALL IN PLAY	
84	A5J2-3	NOTE 1	
72	A5J2-4	NOTE 1	
	A5J2-5	NOTE 1	
	A5J2-9	NOTE 1	
61	A5J2-12	NOTE 1	
53	A5J2-13	NOTE 1	

TO A2J3-11 5.9V.A.C. — 10 — GEN ILL. LAMPS (17) — TO A2J3-2 — 50

TO A2J3-10 — 70 — GEN ILL. (12) LAMPS — A3J3-1 TO — 40

20 A2J3-6

A1J2 SEE TABEL A

TO A2J3-13 — 53 — 43 V.D.C. — L1 — CR1 — TO A3J3-4 — 83 — KNOCKER

A2 TRANSFORMER

J3	TO
40 1	GEN. ILL. RET. (BACKBOX)
50 2	GEN. ILL. RET. (BACKBOX)
18 3	A5J4-2
51 4	A5J4-1
92 5	A3J3-6
20 6	SW. ILL. BUSS
7	KEY
70 8	A3J3-12
30 9	A3J3-5
70 10	GEN. ILL. BUSS
10 11	GEN. ILL. BUSS
90 12	A4J4-15
53 13	SOL. BUSS
58 14	A5J4-11
52 15	A3J3-21
82 16	A3J3-22
56 17	A3J3-10
50 18	A3J3-3
13 19	A3J3-23
15 20	A3J3-24

PLAYFIELD J1	TO
50 1	GEN. ILL. RET. (PLAY-FIELD)
40 2	GEN. ILL. RET.
3	SPARE
4	KEY
70 5	GEN. ILL. BUSS
30 6	SOL. BUSS (PLAYFIELD)
20 7	SW. ILL. BUSS
10 8	GEN. ILL. BUSS

CABINET J2	TO
38 1	GEN. ILL. BUSS
40 2	SOL. BUSS
3	SPARE
4	SPARE GRND.
41 5	GEN. ILL. RET.
30 6	SW. AC POWER
50 7	AC RET.
8	KEY
70 9	FLIP. SW. RET.
40 10	PWR. LINE GND.

LAMP DRIVER A5

J4	TO
51 1	A2J3-4
18 2	A2J3-3
84 3	A3J3-16
74 4	A4J1-19
71 5	A4J1-18
65 6	A4J1-17
63 7	A4J1-16
8	KEY
9	N/U
10	N/U
58 11	A2J3-14
12	SPARE GND
75 13	A4J1-11
32 14	A4J1-15
13 15	A4J1-14
45 16	A4J1-13
48 17	A4J1-12

J2	TO
60 1	P. UP 4
20 2	P. UP 3
84 3	NOTE 1
72 4	NOTE 1
5	NOTE 1
85 6	N PLAY 3
91 7	N PLAY 4
93 8	MATCH
9	NOTE 1
98 10	TILT
95 11	GAME OVER
61 12	NOTE 1
53 13	NOTE 1
12 14	P. UP 1
32 15	P. UP 2
34 16	N PLAY 1
17	N/U
18	KEY
19	N/U
35 20	N PLAY 2
47 21	SHOOT AGAIN
62 22	BALL IN PLAY
97 23	HI SCORE

J1	TO
41 1	2 BALL
43 2	ALLEY 2
45 3	14 BALL
35 4	N/U
48 5	Δ 10
25 6	Δ 6
34 7	Δ 2
51 8	10 BALL
52 9	6 BALL
32 10	ALLEY 6
65 11	Δ 14
61 12	5 X
96 13	Δ 7
54 14	ALLEY 1
13 15	ALLEY 2
12 16	Δ 1
57 17	9 BALL
58 18	1 BALL
60 19	5 BALL
20	KEY
21	N/U
22	N/U
56 23	13 BALL
50 24	Δ 9
90 25	Δ 13
91 26	NOTE 1
53 27	SUPER BONUS
78 28	Δ 5

J3	TO
10 1	4 BALL
95 2	Δ 8
81 3	CREDIT IND.
14 4	Δ 4
5	N/U
6	N/U
7	N/U
8	KEY
15 9	ALLEY 4
91 10	Δ 12
20 11	LEFT ARROW
21 12	8 BALL
13 13	S.P.S.A.
84 14	2 X
53 15	12 BALL
25 16	ALLEY 3
27 17	15 BALL
56 18	RIGHT ARROW
67 19	14 BALL
64 20	Δ 15
30 21	Δ 11
23 22	SPNR. & R. ARR.
98 23	OUTLN. SPEC.
72 24	3 X
36 25	7 BALL
38 26	3 BALL
40 27	Δ 3
28	N/U

J5 (TEST CONNECTOR)	
1	D7
2	D6
3	D5
4	D4
5	D3
6	D2
7	D1
8	D0
9	A13
10	A12
11	A11
12	A10
13	A9
14	A8
15	A7
16	A6
17	A5
18	A4
19	A3
20	A2
21	A1
22	A0
23	R/W
24	HLT
25	RES
26	VMA
27	Ø2
28	EX MEM.
29	KEY
30	+ 5 V.D.C.
31	GND
32	A4U11-18

MPU A4

J1	TO
80 1	A1J1-4
20 2	A1J1-5
30 3	A1J1-6
40 4	A1J1-7
50 5	A1J1-8
58 6	A1J1-9
7	NOTE 1
8	NOTE 1
9	KEY
70 10	A1J1-10
75 11	A5J4-13
48 12	A5J4-17
45 13	A5J4-16
13 14	A5J4-15
32 15	A5J4-14
63 16	A5J4-7
65 17	A5J4-6
71 18	A5J4-5
74 19	A5J4-4
85 20	1A1J1-15
31 21	2A1J1-15
72 22	3A1J1-15
67 23	4A1J1-15
18 24	5A1J1-15
51 25	A1J1-19
25 26	A1J1-18
38 27	A1J1-17
54 28	A1J1-16

J4	TO
15 1	A3J4-3
78 2	A3J4-4
21 3	A3J4-5
23 4	A3J4-6
36 5	A3J4-11
27 6	A3J4-9
25 7	A3J4-8
31 8	A3J4-10
9	N/U
61 10	A3J4-7
11	N/C
14 12	A3J3-11
13	N/C
14	KEY
90 15	A2J3-12
96 16	A3J3-14
54 17	A3J3-15
94 18	A3J3-18
81 19	A3J3-19

J2	TO	
31 1	ST 0	PLAY-FIELD STROBE
2	ST 1	
52 3	ST 2	
53 4	ST 3	
31 5	ST 4	
6	KEY	
7	N/U	
54 8	I 0	PLAY-FIELD SW RETURN
56 9	I 1	
57 10	I 2	
58 11	I 3	
60 12	I 4	
63 13	I 5	
65 14	I 6	
70 15	I 7	

J3	TO	
10 1	SELF TEST SW.	
13 2	ST 0	SW. CAB. STROBE
14 3	ST 1	
4	KEY	
5	N/U	
6	N/U	
7	N/U	
8	N/U	
15 9	I 0	CAB. SW. RET.
65 10	I 1	
20 11	I 2	
21 12	I 3	
23 13	I 4	
25 14	I 5	
27 15	I 6	
30 16	I 7	

VOLTAGE REGULATOR / SOLENOID DRIVER A3

J4	TO
1	N/U
2	KEY
15 3	A4J4-1
78 4	A4J4-2
21 5	A4J4-3
23 6	A4J4-4
61 7	A4J4-10
25 8	A4J4-7
27 9	A4J4-6
31 10	A4J4-8
36 11	A4J4-5
12	N/U

J3	TO
1	N/U
2	KEY
50 3	A2J3-18
83 4	KNOCKER
30 5	A2J3-9
92 6	A2J3-5
7	NOTE 1
10 8	A1J1-1
9	NOTE 1
56 10	A3J3-17
14 11	A4J4-12
70 12	A2J3-8
64 13	A3J3-25
96 14	A4J4-16
54 15	A4J4-17
84 16	A5J4-3
45 17	A1J1-20
94 18	A4J4-18
81 19	A4J4-19
60 20	A1J1-13
52 21	A2J3-15
82 22	A2J3-16
13 23	A2J3-19
57 24	A2J3-20
64 25	A3J3-13

J2	TO
10 1	R. FLIP. SW.
20 2	L. FLIP. SW.
3	KEY
4	NOTE 1
5	NOTE 1
6	NOTE 1
31 7	TST. SW. RTN.
36 8	COIN L.O.
58 9	CHIME 10
57 10	CHIME 100
56 11	CHIME 1000
54 12	EXTRA CHM
13	N/U
14	N/U
15	NOTE 1

J1	TO
1	N/U
2	NOTE 1
3	NOTE 1
4	N/U
63 5	OUTHOLE
6	N/U
7	KEY
40 8	L. FLIP. COIL
70 9	R. FLIP. COIL

J5	TO
1	N/U
2	N/U
3	NOTE 1
4	N/U
5	N/U
6	KEY
81 7	NOTE 1
18 8	NOTE 1
71 9	BOTTOM BUMPER
40 10	SIDE RETURN KICKER
70 11	RIGHT BUMPER
65 12	LEFT BUMPER
80 13	N/U
83 14	RIGHT SLINGSHOT
85 15	LEFT SLINGSHOT

TO CABINET

TO PLAYFIELD

NOTES

1. THESE PINS ARE RESERVED FOR FUTURE USE.
2. WIRE COLORS ARE SHOWN FOR ALL CONNECTOR PINS, SOME WIRES MAY NOT BE USED IN ALL GAMES.
3. ✱ INDICATES AID TEST POINT.

WIRE COLOR CODE	
1-RED	6-BROWN
2-BLUE	7-ORANGE
3-YELLOW	8-BLACK
4-GREEN	9-GRAY
5-WHITE	0-NO TRACE

SHEET 1 OF 3

ALL DESIGN, OPERATIVE AND PROCESS DATA PERTAINING TO THE ARTICLE SHOWN ON THIS SHEET IS THE PROPERTY OF BALLY MFG. CORP. CHICAGO, ILL. THIS INFORMATION IS DISCLOSED IN CONFIDENCE AND IS NOT TO BE COPIED, REPRODUCED, REVEALED TO OR APPROPRIATED BY OTHERS IN PART OR IN WHOLE, WITHOUT THE EXPRESS CONSENT OF THE OWNERS. THE PRINT IS LOANED AND MUST NOT BE USED IN ANY MANNER DETRIMENTAL TO THE INTEREST OF THE OWNERS AND MUST BE RETURNED ON DEMAND.

LET	CHANGE	DATE	BY	CK

REMOVE ALL BURRS

TOLERANCES ON DIMENSIONS UNLESS OTHERWISE SPECIFIED: FRACTIONS ± 1/64, DECIMALS ± .005, ANGLES ± 1°

DO NOT SCALE DRAWING

DR BY — DATE
CK BY Tom — DATE 7-5-77
APP BY — DATE
APP BY — DATE
FINISH — HARDENING

Bally MANUFACTURING CORP. 8-BALL
2640 BELMONT AVENUE
CHICAGO, ILLINOIS
1118-E

PRINT FOR PRODUCTION — TOTAL — SCALE

NAME: BACKBOX DIAGRAM

MATERIAL

ASSEM NO — USED ON #

PART NO W-1186-3c

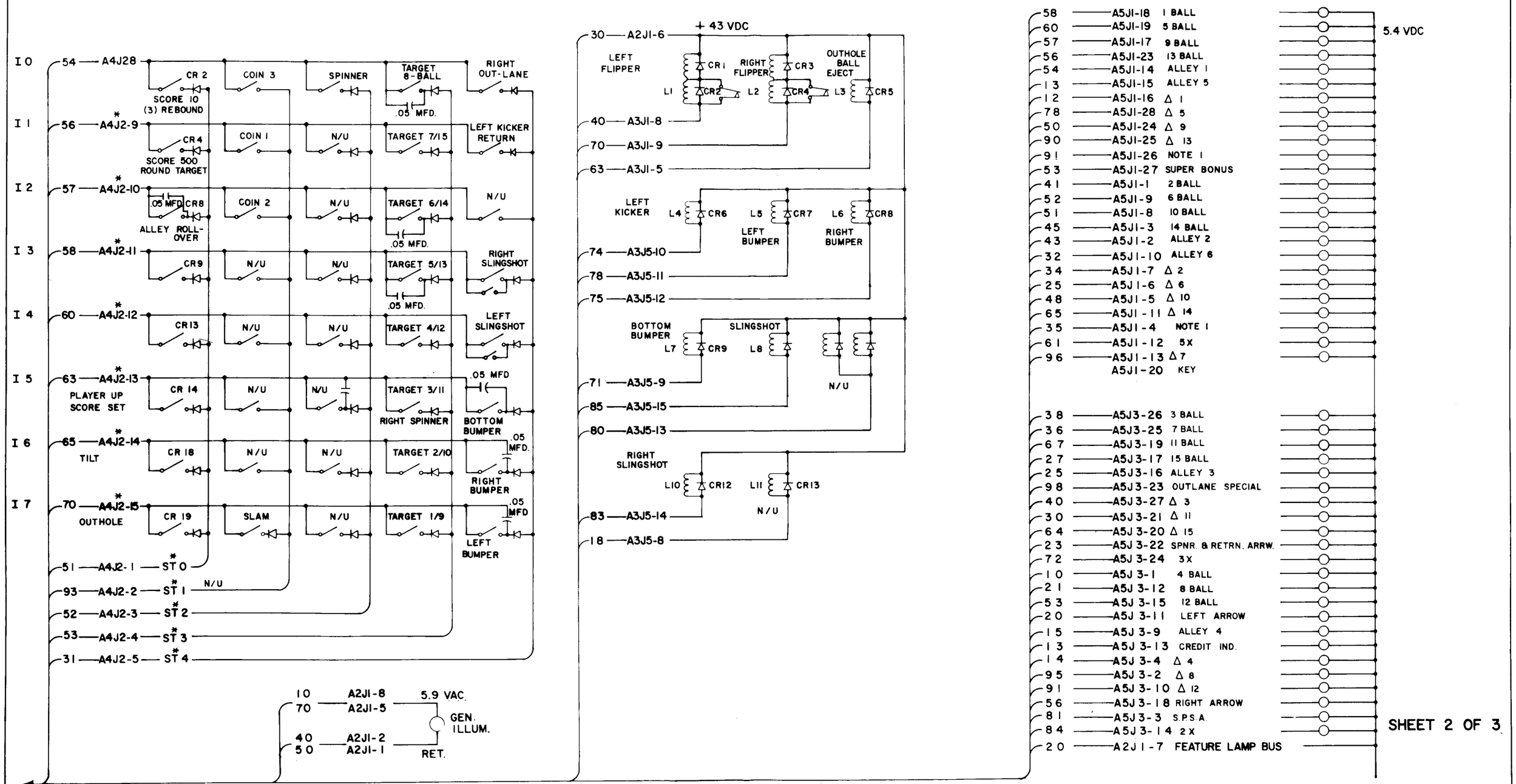

SHEET 2 OF 3

PLAYFIELD A6

NOTES

1. INDICATES NOT USED
2. N/U = NOT USED ON PLAYFIELD
3. ✱ INDICATES AID TEST POINT
4. Δ INDICATES RACKED BALL

ALL DESIGN, OPERATIVE AND PROCESS DATA PERTAINING TO THE ARTICLE SHOWN ON THIS SHEET IS THE PROPERTY OF BALLY MFG. CORP. CHICAGO ILL. THIS INFORMATION IS DISCLOSED IN CONFIDENCE AND IS NOT TO BE COPIED, REPRODUCED, REVEALED TO OR APPROPRIATED BY OTHERS IN PART OR IN WHOLE WITHOUT THE EXPRESS CONSENT OF THE OWNERS. THE PRINT IS LOANED AND MUST NOT BE USED IN ANY MANNER DETRIMENTAL TO THE INTEREST OF THE OWNERS AND MUST BE RETURNED ON DEMAND.

LET	CHANGE	DATE	BY	CK

REMOVE ALL BURRS

TOLERANCES ON DIMENSIONS UNLESS OTHERWISE SPECIFIED
FRACTIONS ± 1/64
DECIMALS ± .005
ANGLES ±

DO NOT SCALE DRAWING

DR BY — DATE
CK BY — DATE 7-5-72
APD BY — DATE 7/12/72
APD BY — DATE 7/14/72
FINISH
HARDENING

Bally MANUFACTURING CORP.
2640 BELMONT AVENUE
CHICAGO, ILLINOIS

8-BALL
1118-E

PRINT CONTROL — TOTAL — SCALE

NAME: PLAYFIELD DIAGRAM

ASSEM. NO. USED ON #

MATERIAL

PART NO. W-1186-3c

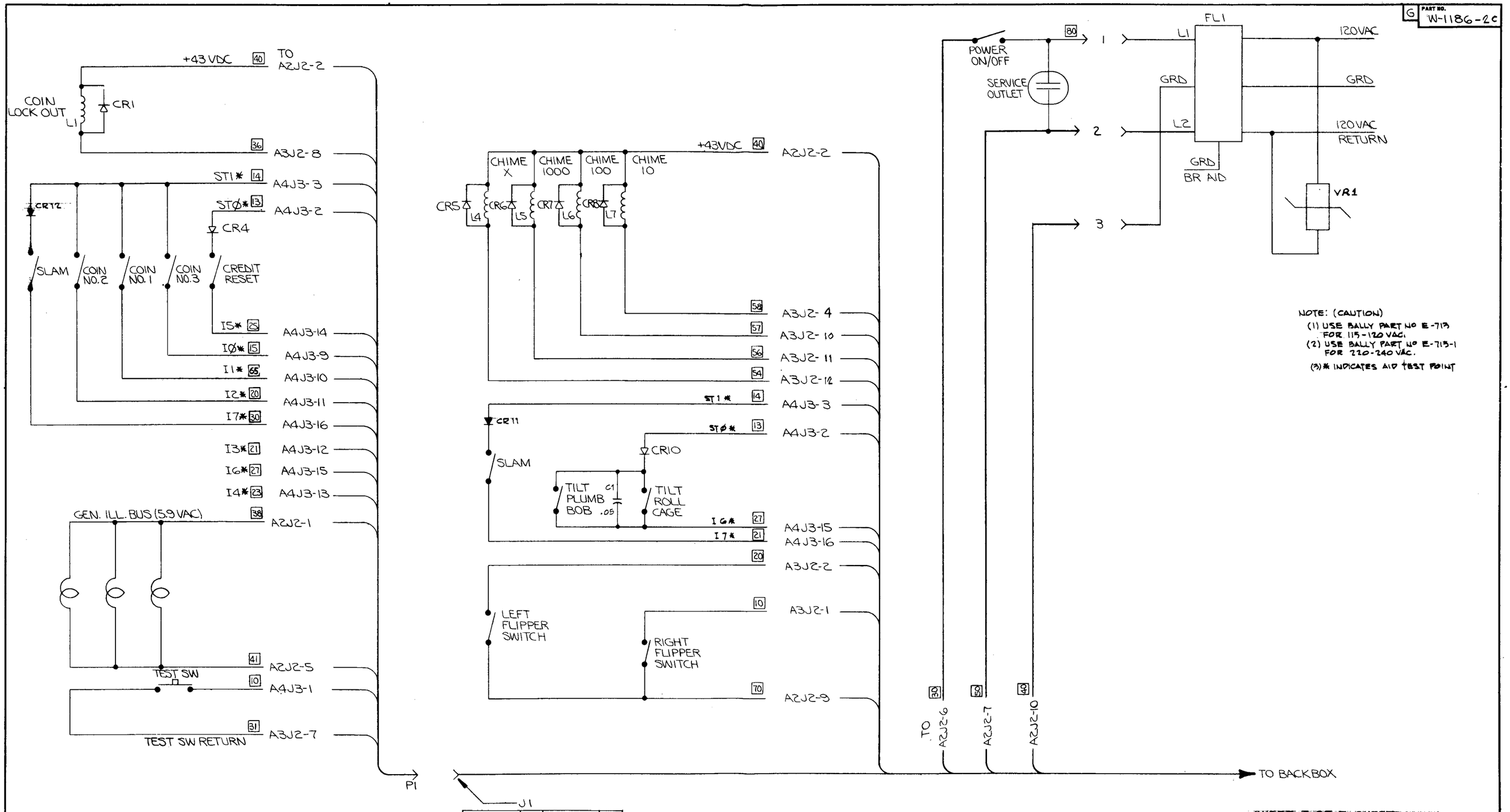

NOTE: (CAUTION)
(1) USE BALLY PART NO E-713 FOR 115-120 VAC.
(2) USE BALLY PART NO E-713-1 FOR 220-240 VAC.
(3) * INDICATES AID TEST POINT

TO	J1 PIN	TO	J1 PIN
A4J3-9	1	A4J3-3	11
A4J3-10	2	A2J2-2	15
A4J3-11	3	A3J2-8	16
A4J3-12	4	A2J2-1	17
A4J3-13	5	A2J2-5	18
A4J3-14	6	A4J3-1	19
A4J3-15	7	A3J2-7	20
A4J3-16	8		
A4J3-2	10		

A7 CABINET ASSY. WIRING

G PART NO. W-1186-2C

SHEET 3 OF 3 SHEETS

DIE SIZE — C.C. — FT. PER M — LBS. PER M —

ALL DESIGN, OPERATIVE AND PROCESS DATA PERTAINING TO THE ARTICLE SHOWN ON THIS SHEET IS THE PROPERTY OF BALLY MFG. CORP., CHICAGO, ILL. THIS INFORMATION IS DISCLOSED IN CONFIDENCE AND IS NOT TO BE COPIED, REPRODUCED, REVEALED TO OR APPROPRIATED BY OTHERS, IN PART OR IN WHOLE, WITHOUT THE EXPRESS CONSENT OF THE OWNERS. THE PRINT IS LOANED AND MUST NOT BE USED IN ANY MANNER DETRIMENTAL TO THE INTEREST OF THE OWNERS, AND MUST BE RETURNED ON DEMAND.

REMOVE ALL BURRS
TOLERANCES ON DIMENSIONS UNLESS OTHERWISE SPECIFIED
FRACTIONS ±
DECIMALS ±
ANGLES ±
DO NOT SCALE DRAWING

DR. BY DATE 8-18
CK. BY DATE
APD BY DATE
APD BY DATE
FINISH:
HARDENING:

Bally MANUFACTURING CORP. E.K.
2640 BELMONT AVENUE
CHICAGO, ILLINOIS
1094

PRINT CONTROL | PROD. CONT. | PUR. CONT. | PRO. ENG. | TOOL ENGR. | SAFT. | PUR. | TECH. | MAT. MGR. | TOTAL 3 | SCALE

NAME WIRING DIAGRAM ELECTRONIC
ASSEM. NO. USED ON/W 1118-E
MATERIAL
PART NO. W-1186-2C

OPER.	DEPT.	DESCRIPTION	TOOL No.

NO.	LET.	CHANGE	DATE	BY	CK.