USB

USB Type-C

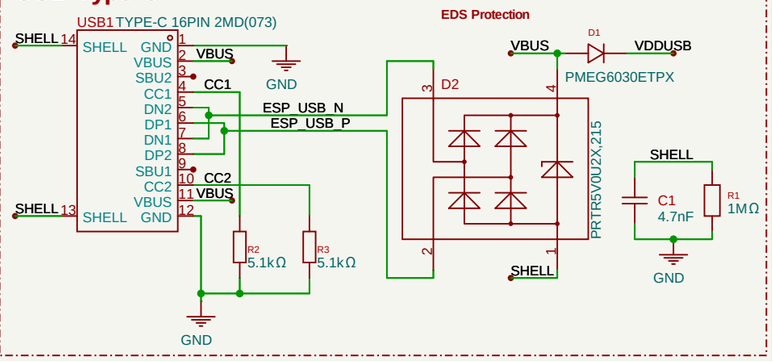

Links:

1. SCH_ESP32_RelayControl_2024-06-12.pdf
2. https://www.waveshare.com/wiki/R7FA4_PLUS_B

Schematic	GController	Update Date	2024-12-04
		Create Date	2024-08-16
Page	USB	Part Number	JLCPCB-002
Drawn	Naren Subburaj	GController	
Reviewed	Naren Subburaj		
		VER	SIZE	PAGE 1 OF 17
EasyEDA		V0.1	A3	Mark

Power Supply

Buck Convertor

Input : 15VDC - 36VDC
Output : 12V 5A

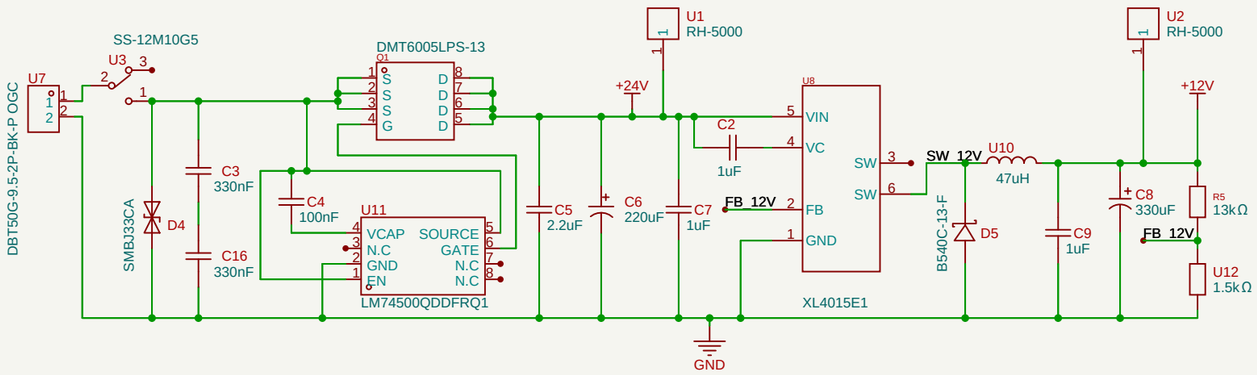

Buck Convertor

Input : 12V 5A
Output : 5V 3A and Isolated 5V 3A

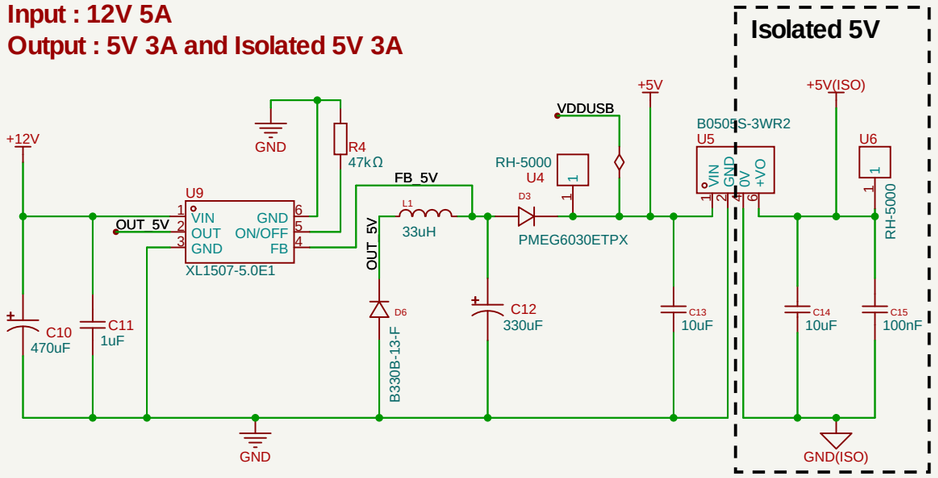

LDO

Input : 5V 3A
Output : 3.3V 2A

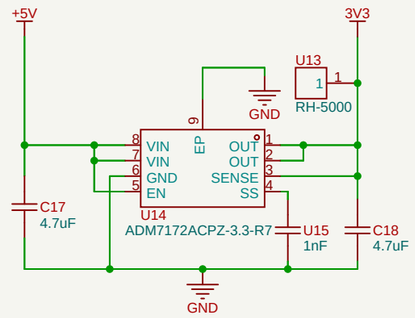

Links:

1. https://www.ti.com/lit/ug/snou172/snou172.pdf?ts=1728768049324&ref_url=https%253A%252F%252Fwww.google.com%252F
2. https://www.lcsc.com/datasheet/lcsc_datasheet_1811081616_XLSEMI-XL4015E1_C51661.pdf
3. https://www.lcsc.com/datasheet/lcsc_datasheet_2304140030_XLSEMI-XL1507-ADJE1_C74194.pdf
4. https://www.lcsc.com/datasheet/lcsc_datasheet_2004231133_Analog-Devices-ADM7172ACPZ-3-3-R7_C514342.pdf

Schematic	GController	Update Date	2024-12-04
		Create Date	2024-08-13
Page	PowerSupply	Part Number	JLCPCB-002
Drawn	Naren Subburaj	GController	
Reviewed	Naren Subburaj		
		VER / SIZE / PAGE	V0.1 / A3 / 2 OF 17
EasyEDA		Mark	

Touch Power Supply

Panel Voltage

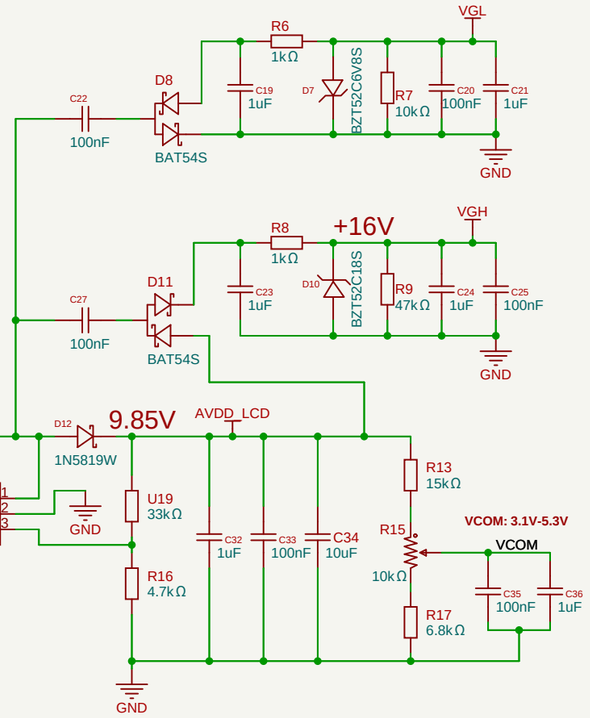

Backlight

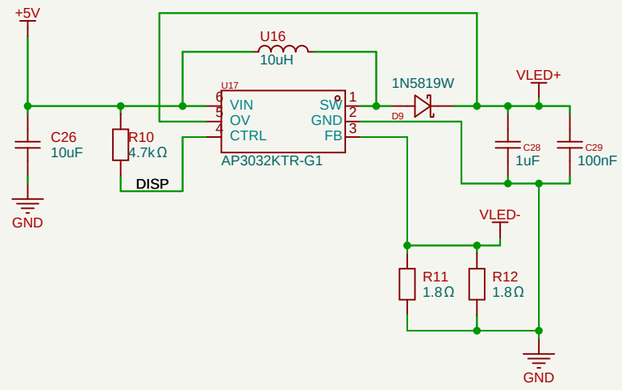

Links:

1. https://www.waveshare.com/wiki/ESP32-S3-Touch-LCD-7

Schematic	GController	Update Date	2024-12-04
		Create Date	2024-08-28
Page	Touchscreen-PowerSupply	Part Number	JLCPCB-002
Drawn	Naren Subburaj	GController	
Reviewed	Naren Subburaj		
		VER / SIZE / PAGE	V0.1 / A3 / 3 OF 17
EasyEDA		Mark	

Pin Mapping

I2C
IO8 — SDA
IO9 — SCL

SPI
IO11 — MOSI
IO12 — SCK
IO13 — MISO

RS485
IO15 — RS485_TXD
IO16 — RS485_RXD

SPI SD Card
MOSI — SD_MOSI
SCK — SD_SCK
MISO — SD_MISO
EXTIO4 — SD_CS

SPI NAND Flash
MOSI — FL_MOSI
SCK — FL_SCK
MISO — FL_MISO
EXTIO5 — FL_CS

SPI LORA Header
MOSI — LO_MOSI
SCK — LO_SCK
MISO — LO_MISO
EXTIO6 — LO_CS
EXTIO7 — LO_RST
EXTIO8 — LO_DIO0

Pilot Lamp
EXTIO9 — LAMP_01
EXTIO10 — LAMP_02
EXTIO11 — LAMP_03

Buzzer
EXTIO12 — BUZZER

Digital Outputs
EXTIO13 — DO_01
EXTIO14 — DO_02
EXTIO15 — DO_03
EXTIO16 — DO_04
EXTIO17 — DO_05
EXTIO18 — DO_06
EXTIO19 — DO_07
EXTIO20 — DO_08
EXTIO21 — DO_09
EXTIO22 — DO_10

Digital Inputs
EXTIO23 — DI_01
EXTIO24 — DI_02
EXTIO25 — DI_03
EXTIO26 — DI_04
EXTIO27 — DI_05
EXTIO28 — DI_06

I2C Temp Sensor
SDA — TEMP_SDA
SCL — TEMP_SCL

I2C I/O Expander
SDA — IO0_SDA
SCL — IO0_SCL
SDA — IO1_SDA
SCL — IO1_SCL

I2C Analog Input
SDA — AI_SDA
SCL — AI_SCL

I2C Analog Output
SDA — AO_SDA
SCL — AO_SCL

I2C RTC
SDA — RTC_SDA
SCL — RTC_SCL

USB
IO0 — BOOT

RGB LED
IO6 — RGB_LED

UART Header
TXD0 — UART_TXD0
RXD0 — UART_RXD0

7inch LCD Touchscreen
IO0 — G3
IO1 — R3
IO2 — R4
IO3 — VSYNC
IO4 — CTP_IRQ
IO5 — DE
IO7 — PCLK
IO10 — B7
IO14 — B3
IO17 — B6
IO18 — B5
IO21 — G7
IO38 — B4
IO39 — G2
IO40 — R7
IO41 — R6
IO42 — R5
IO45 — G4
IO46 — HSYNC
IO47 — G6
IO48 — G5
EXTIO0 — CTP_RST
EXTIO1 — DISP
EXTIO2 — LCD_RST
EXTIO3 — LCD_VDD_EN

I2C Touchscreen
SDA — CTP_SDA
SCL — CTP_SCL

ESP32

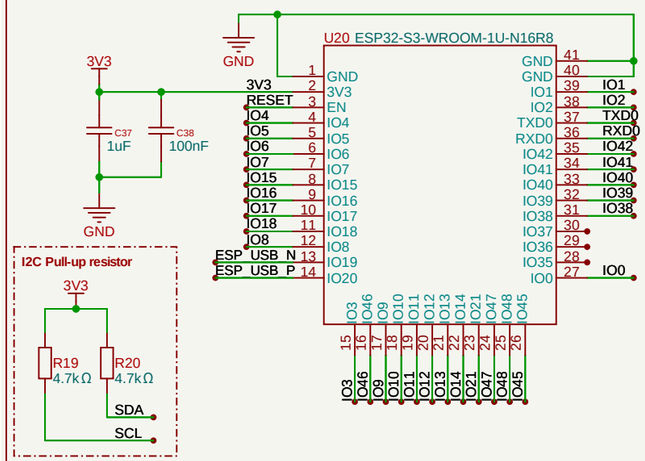

I2C Pull-up resistor

Push Button
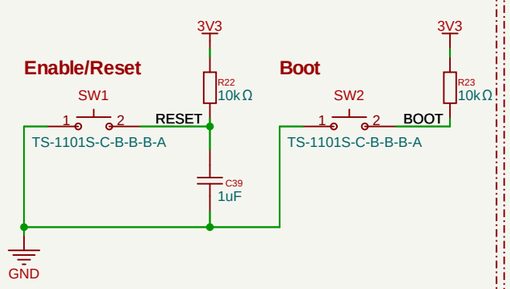

Strapping Pins
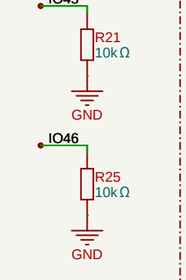

I2C Extender
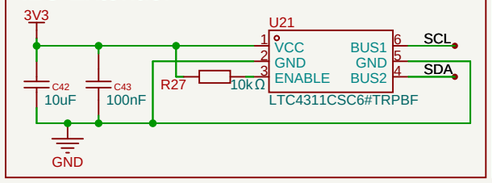

FPC Connector (7inch LCD & Touch)

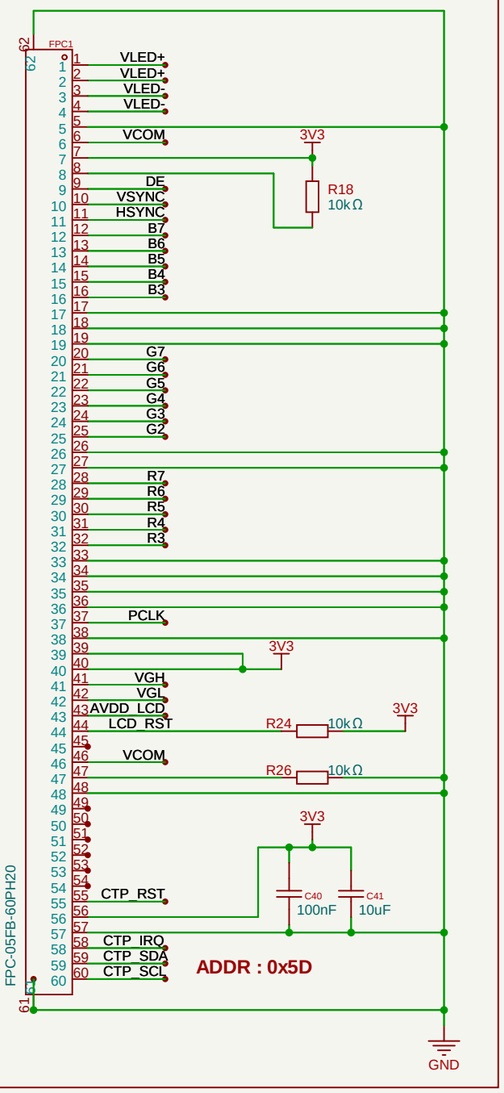

Links:

1. https://www.waveshare.com/wiki/ESP32-S3-Touch-LCD-7

Schematic	GController	Update Date	2024-12-04
		Create Date	2024-08-16
Page	ESP32-Display	Part Number	JLCPCB-002
Drawn	Naren Subburaj	GController	
Reviewed	Naren Subburaj		
		VER	V0.1
		SIZE	A3
		PAGE 4 OF 17	
EasyEDA		Mark	

I/O Expander

ADDR	A0	A1	A2	ADDR	A0	A1	A2
0x20	L	L	L	**0x24**	L	L	H
0x21	H	L	L	**0x25**	H	L	H
0x22	L	H	L	**0x26**	L	H	H
0x23	H	H	L	**0x27**	H	H	H

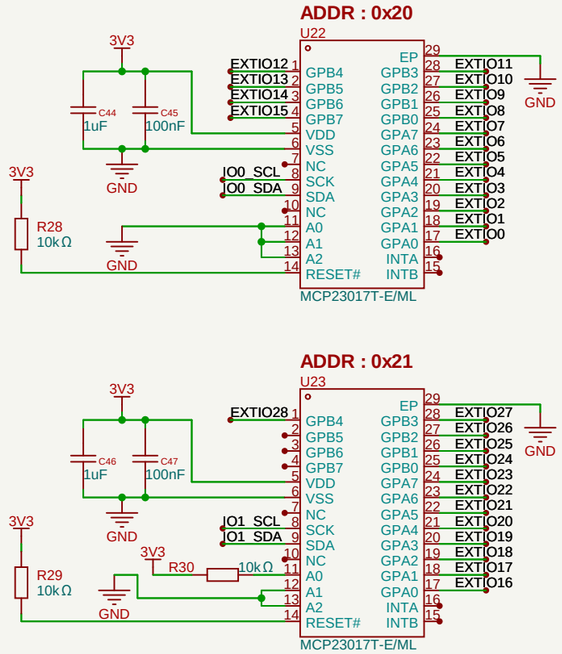

Links:

1. https://learn.adafruit.com/adafruit-mcp23017-i2c-gpio-expander/downloads
2. https://dfimg.dfrobot.com/nobody/wiki/3ce3119985b8f9f527018369cbe7be41.pdf

Schematic	GController	Update Date	2024-12-04
		Create Date	2024-09-24
Page	IO-Expander	Part Number	JLCPCB-002
Drawn	Naren Subburaj	GController	
Reviewed	Naren Subburaj		
		VER: V0.1	SIZE: A3
EasyEDA		PAGE 5 OF 17	Mark

Inverter

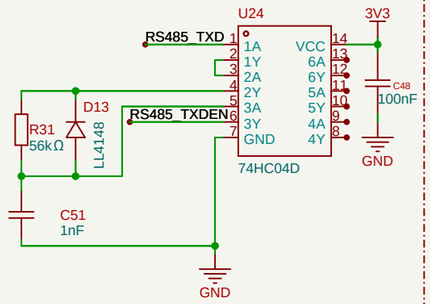

Digital/Power isolater

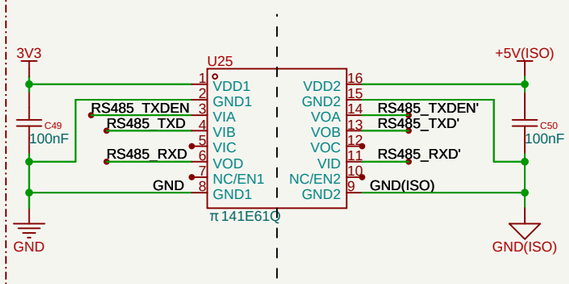

RS485

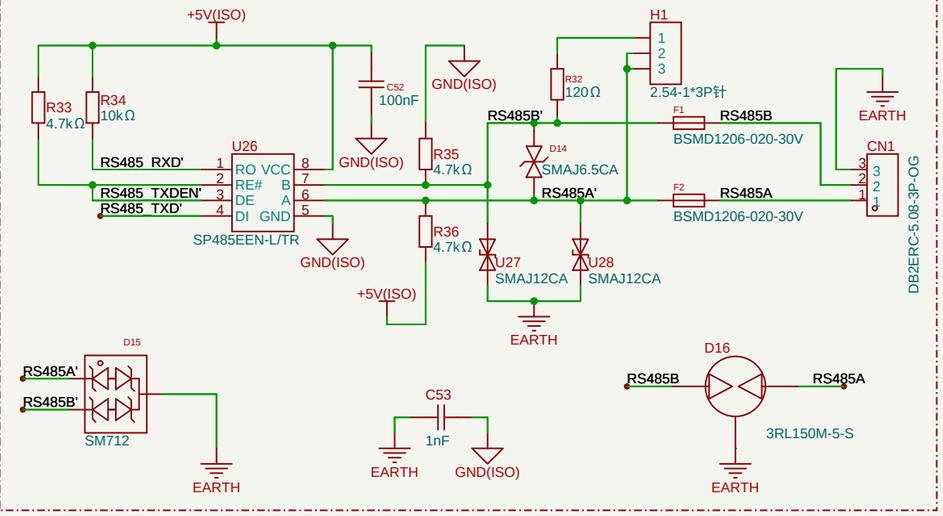

Links:

1. https://www.waveshare.com/wiki/ESP32-S3-Relay-6CH

Schematic	GController	Update Date	2024-12-04
		Create Date	2024-09-24
Page	RS485	Part Number	JLCPCB-002
Drawn	Naren Subburaj	GController	
Reviewed	Naren Subburaj		
		VER / SIZE / PAGE 6 OF 17	
EasyEDA		V0.1 / A3	Mark

RTC

Fixed ADDR : 0x68

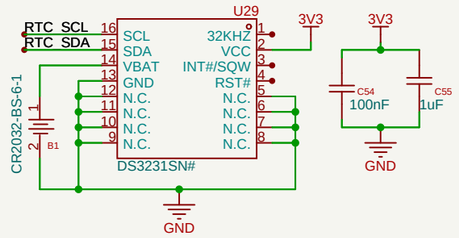

Check the ground

Links:

1. https://learn.adafruit.com/adafruit-ds3231-precision-rtc-breakout/downloads
2. https://www.lcsc.com/datasheet/lcsc_datasheet_2310091153_Analog-Devices-Inc--Maxim-Integrated-DS3231SN-_C722469.pdf

Schematic	GController	Update Date	2024-12-04
		Create Date	2024-09-24
Page	RTC	Part Number	JLCPCB-002
Drawn	Naren Subburaj	GController	
Reviewed	Naren Subburaj		
		VER / SIZE / PAGE 7 OF 17	
EasyEDA	V0.1 / A3	Mark	

Storage

SD Card

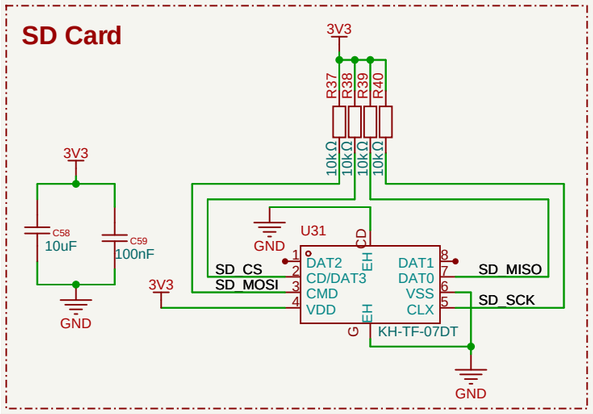

SPI NAND Flash

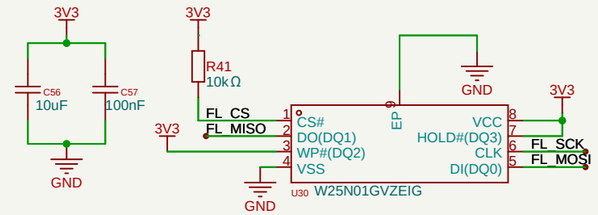

Links:

1. https://www.waveshare.com/wiki/ESP32-S3-Touch-LCD-7
2. https://www.lcsc.com/datasheet/lcsc_datasheet_2304140030_Winbond-Elec-W25N01GVZEIG_C907680.pdf
3. https://learn.adafruit.com/assets/116721
4. https://cdn-learn.adafruit.com/assets/assets/000/116/721/original/components_schem.png?1668619694

Schematic	GController	Update Date	2024-12-04
		Create Date	2024-09-24
Page	Storage	Part Number	JLCPCB-002
Drawn	Naren Subburaj	GController	
Reviewed	Naren Subburaj		
		VER / SIZE / PAGE 8 OF 17	
EasyEDA	V0.1 / A3	Mark	

Temperature & Pressure Sensor

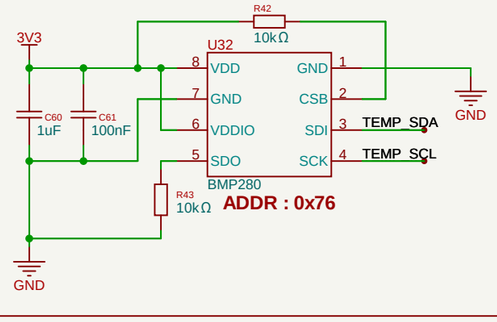

Links:

1. https://docs.sunfounder.com/projects/umsk/en/latest/01_components_basic/20-component_bmp280.html

Schematic	GController	Update Date	2024-12-04
		Create Date	2024-10-15
Page	Temp/Pressure-Sensor	Part Number	JLCPCB-002
Drawn	Naren Subburaj	GController	
Reviewed	Naren Subburaj		
		VER / SIZE / PAGE 9 OF 17	
EasyEDA		V0.1 / A3	Mark

Analog Input (4-20mA)

AI 1

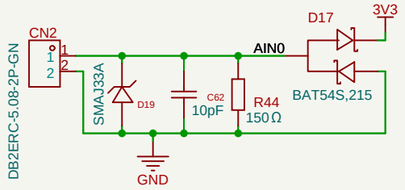

AI 3

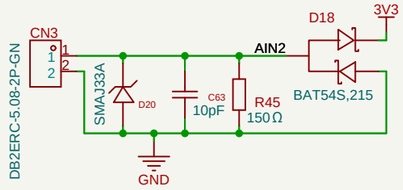

AI 2

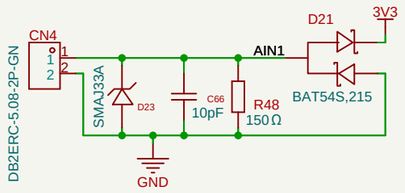

AI 4

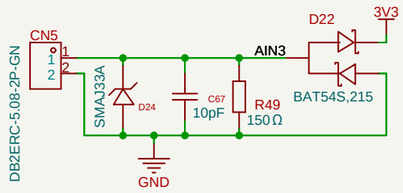

ADS1115

ADDR	A0
0x48	GND
0x49	VCC
0x4A	SDA
0x4B	SCL

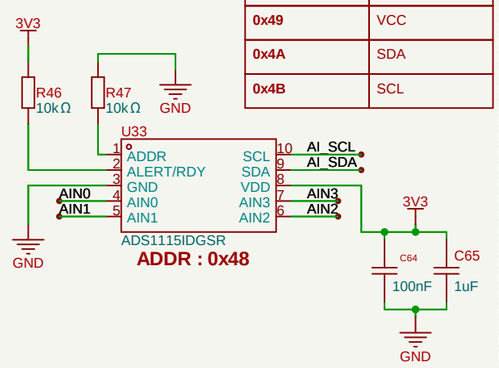

Links:

1. https://how2electronics.com/how-to-use-ads1115-16-bit-adc-module-with-arduino/
2. https://www.lcsc.com/datasheet/lcsc_datasheet_1809192322_Texas-Instruments-ADS1115IDGSR_C37593.pdf

Schematic	GController	Update Date	2024-12-04
		Create Date	2024-10-03
Page	Analog-Input	Part Number	JLCPCB-002
Drawn	Naren Subburaj	GController	
Reviewed	Naren Subburaj		
		VER / SIZE / PAGE	V0.1 / A3 / 10 OF 17
EasyEDA		Mark	

Analog Output (0-10v)

GP8413

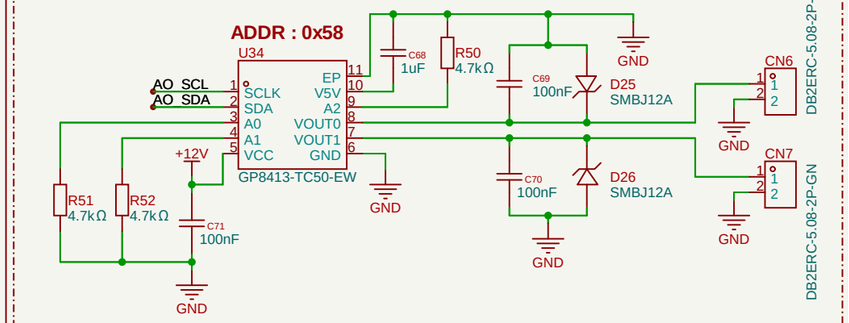

ADDR	A0	A1	A2
0x58	0	0	0
0x59	1	0	0
0x5A	0	1	0
0x5B	1	1	0
0x5C	0	0	1
0x5D	1	0	1
0x5E	0	1	1
0x5F	1	1	1

Links:

1. https://wiki.dfrobot.com/SKU_DFR1073_2_Channel_15bit_I2C_to_0-10V_DAC
2. https://www.lcsc.com/datasheet/lcsc_datasheet_2304281536_Guestgood-GP8413-TC50-EW_C5464816.pdf

Schematic	GController	Update Date	2024-12-04
		Create Date	2024-10-07
Page	Analog-Output	Part Number	JLCPCB-002
Drawn	Naren Subburaj	GController	
Reviewed	Naren Subburaj		
		VER	V0.1
		SIZE	A3
		PAGE 11 OF 17	
EasyEDA		Mark	

Digital Input (3 - 32VDC@5mA)

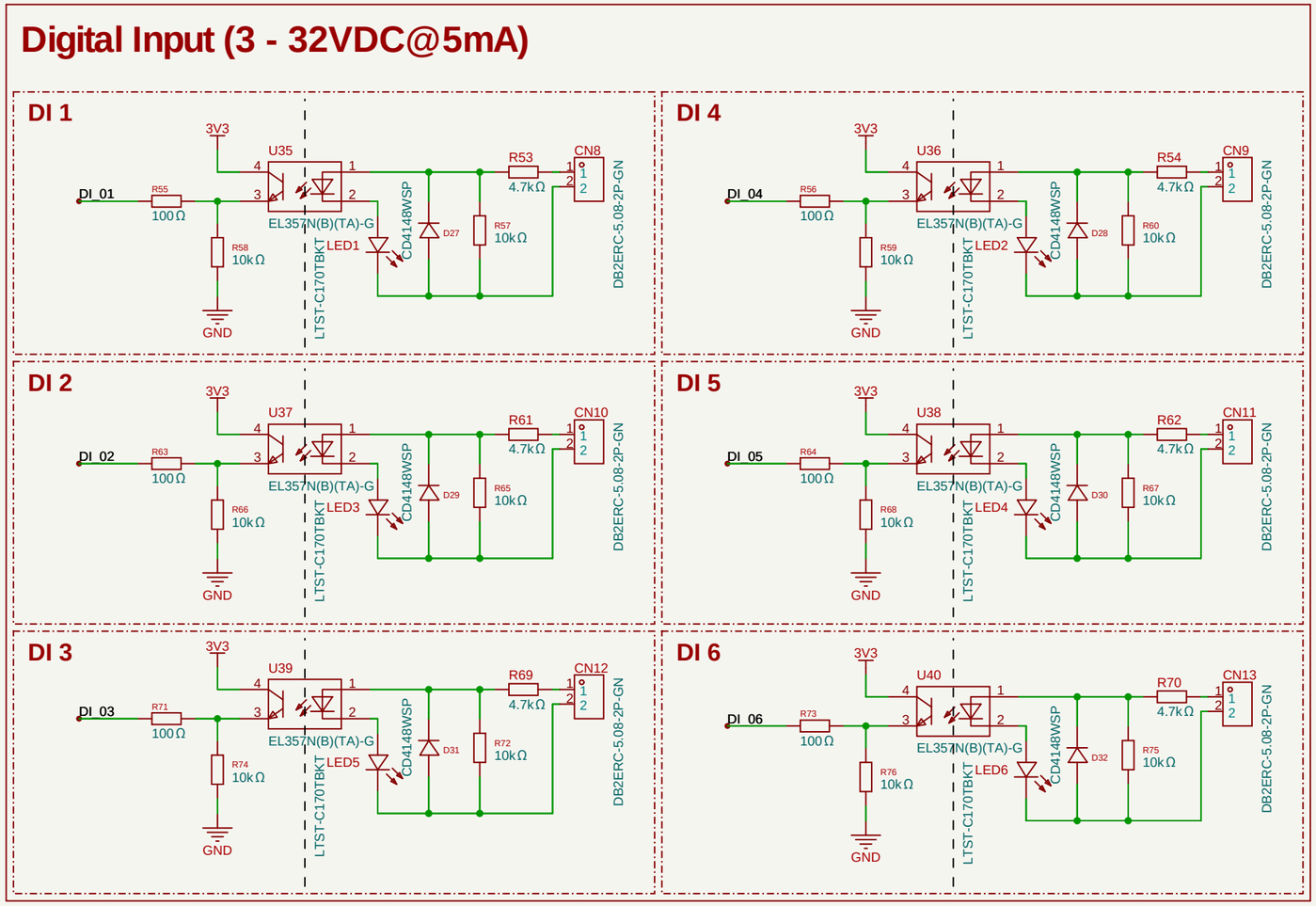

Links:

1. https://www.makeriot2020.com/index.php/tag/diy/

Schematic	GController	Update Date	2024-12-04
		Create Date	2024-10-06
Page	Digital-Input	Part Number	JLCPCB-002
Drawn	Naren Subburaj	GController	
Reviewed	Naren Subburaj		
		VER	SIZE / PAGE 12 OF 17
EasyEDA		V0.1	A3 / Mark

Digital Output - MOSFET

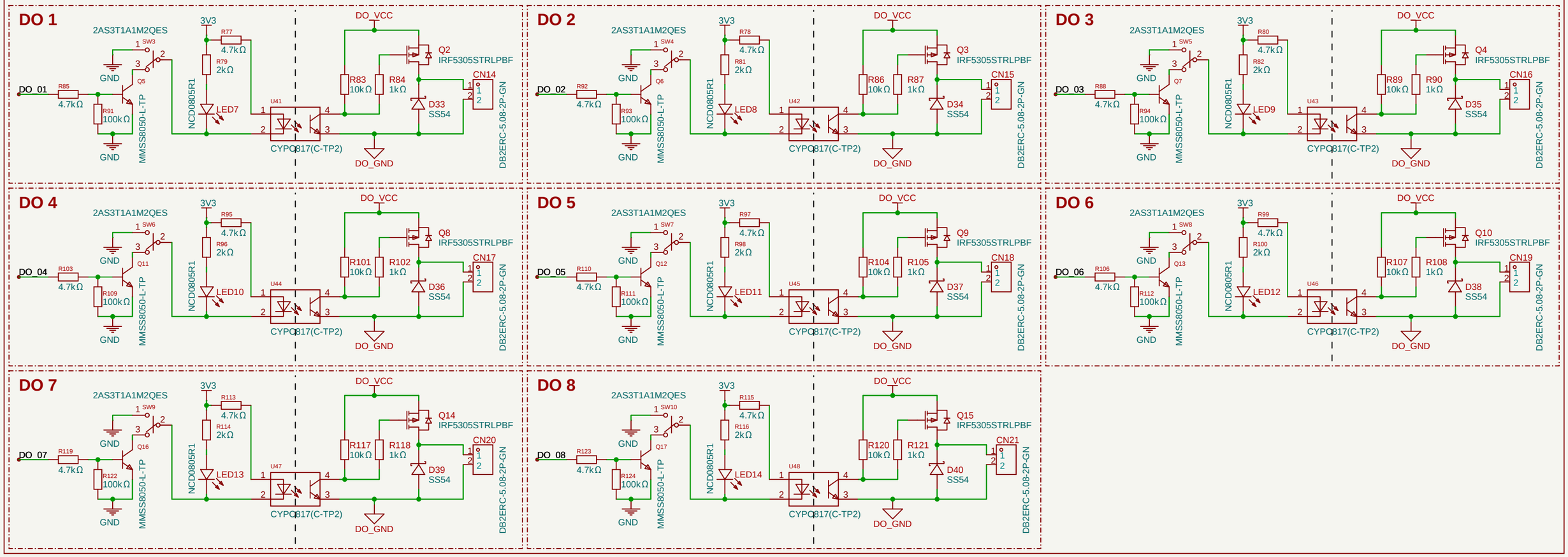

Digital Output - Relay

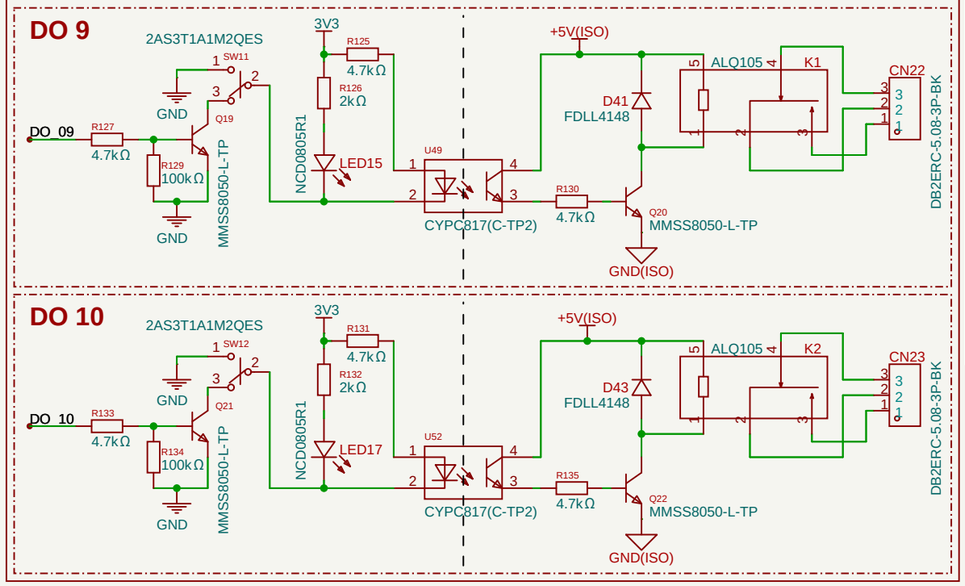

Digital Output Power Supply

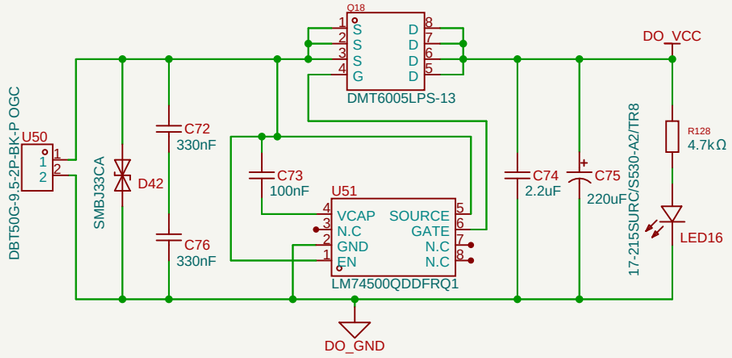

Links:

1. https://robojax.com/learn/arduino/?vid=robojax_e-switch_IRF5305
2. https://www.waveshare.com/wiki/ESP32-S3-Relay-6CH

Schematic	GController	Update Date	2024-12-04
		Create Date	2024-09-24
Page	Digital-Output	Part Number	JLCPCB-002
Drawn	Naren Subburaj	GController	
Reviewed	Naren Subburaj		
		VER / SIZE / PAGE 13 OF 17	
EasyEDA		V0.1 / A3	Mark

Buzzer

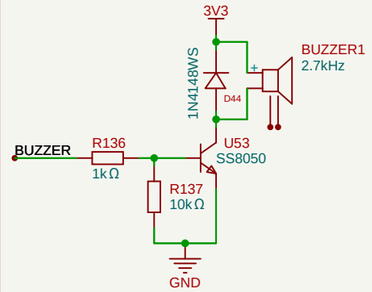

Links:

1. https://www.waveshare.com/wiki/ESP32-S3-Relay-6CH

Schematic	GController	Update Date	2024-12-04
		Create Date	2024-09-24
Page	Buzzer	Part Number	JLCPCB-002
Drawn	Naren Subburaj	GController	
Reviewed	Naren Subburaj		
		VER / SIZE / PAGE 14 OF 17	
EasyEDA	V0.1 / A3	Mark	

LED

Power LED

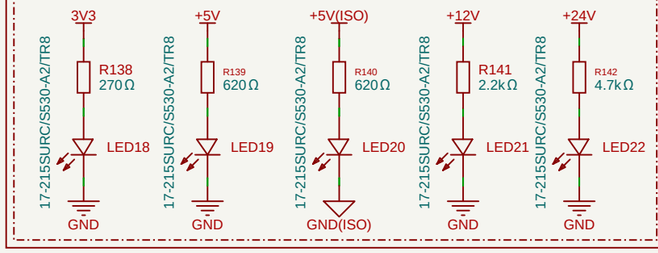

RS485 LED

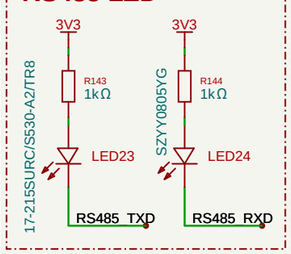

UART LED

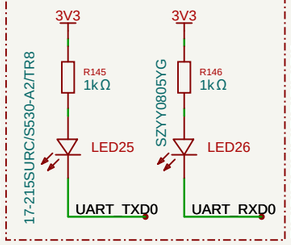

RGB LED

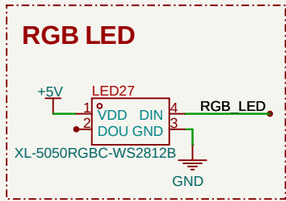

Schematic	GController	Update Date	2024-12-04
		Create Date	2024-10-10
Page	LED	Part Number	JLCPCB-002
Drawn	Naren Subburaj	GController	
Reviewed	Naren Subburaj		
		VER / SIZE / PAGE 15 OF 17	
EasyEDA		V0.1 / A3	Mark

Pilot Lamp
(Running, Alarm and Stopped)

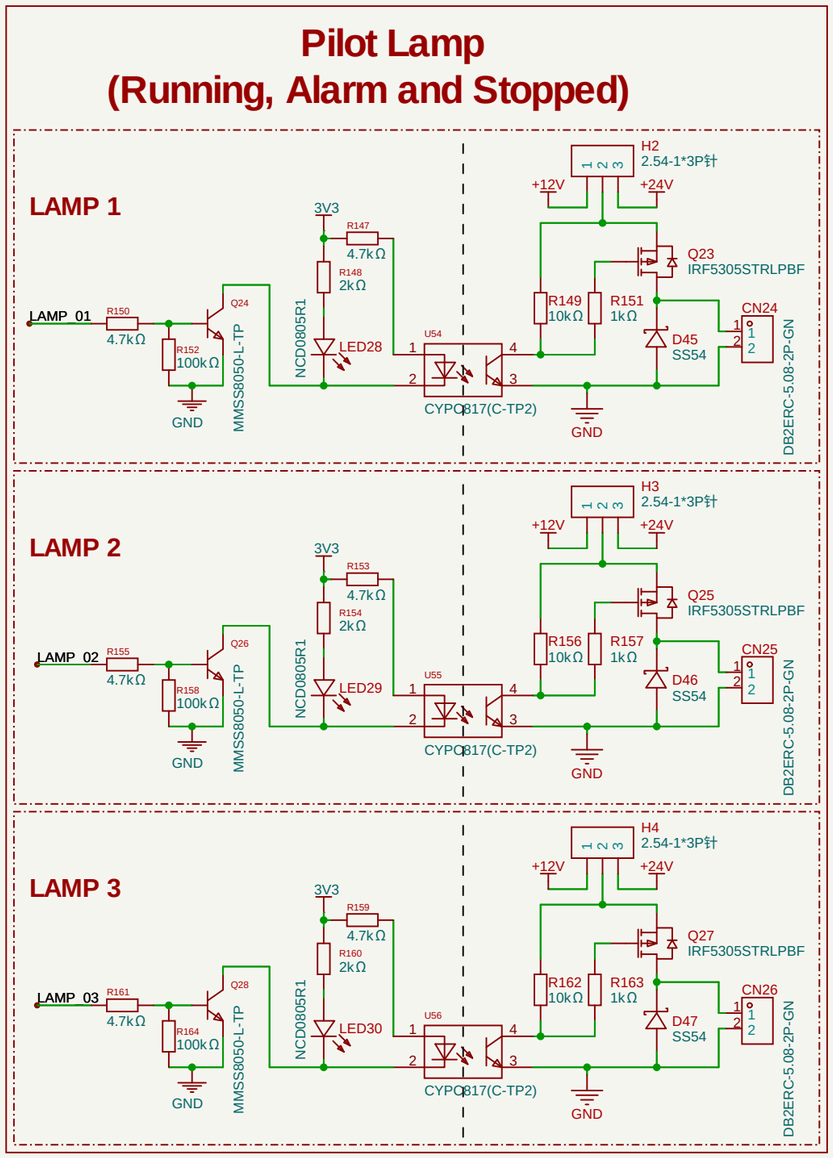

Schematic	GController	Update Date	2024-12-04
		Create Date	2024-10-14
Page	Pilot-Lamp	Part Number	JLCPCB-002
Drawn	Naren Subburaj	GController	
Reviewed	Naren Subburaj		
		VER	SIZE
EasyEDA		V0.1	A3

PAGE 16 OF 17

Mark

LoRa Header

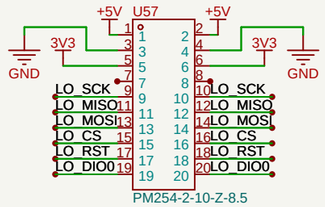

UART Header

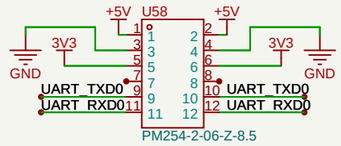

Schematic	GController	Update Date	2024-12-04
		Create Date	2024-10-09
Page	Headers	Part Number	JLCPCB-002
Drawn	Naren Subburaj	GController	
Reviewed	Naren Subburaj		
		VER / SIZE / PAGE 17 OF 17	
EasyEDA	V0.1 / A3	Mark	