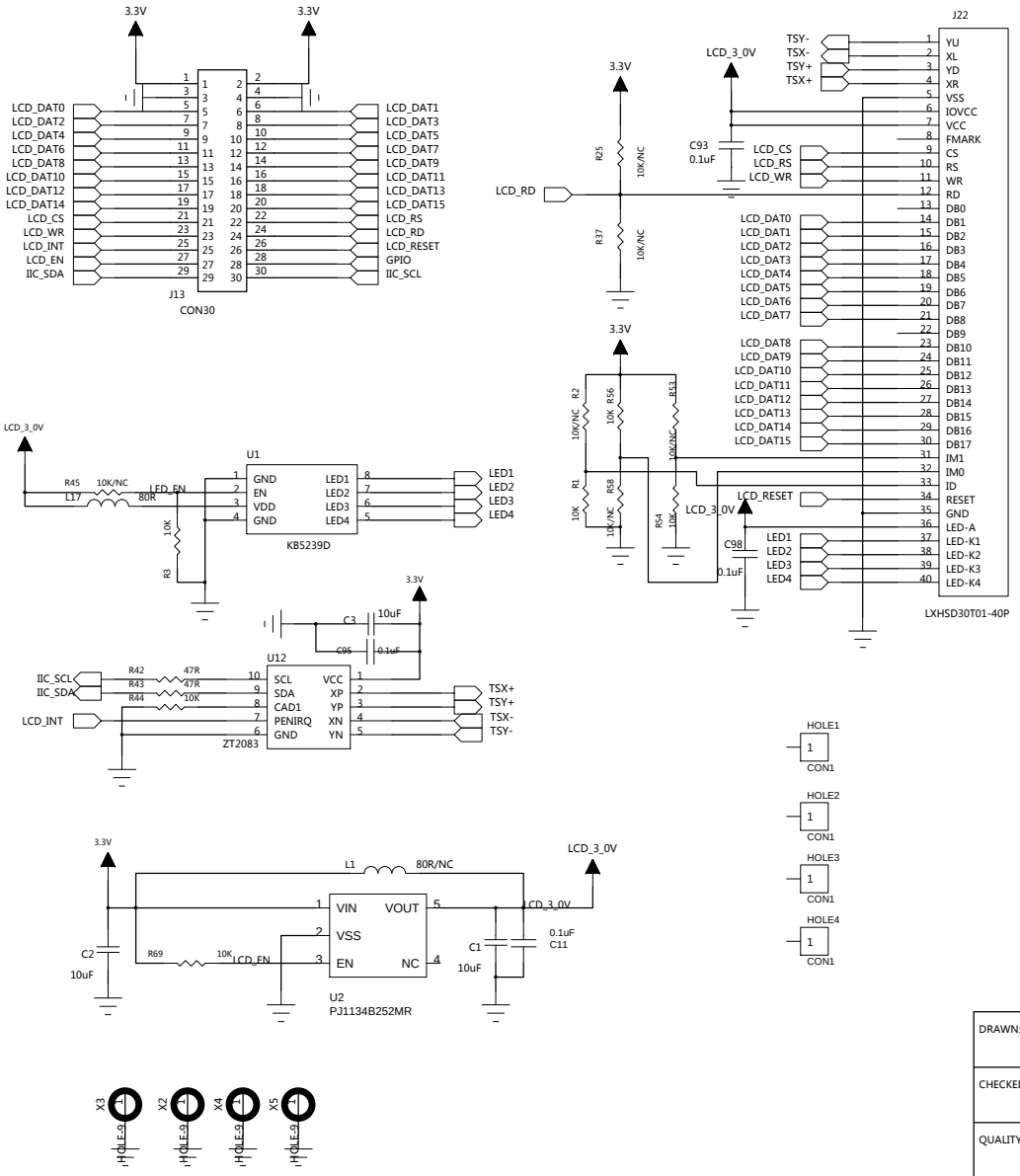

REVISION RECORD			
LTR	ECO NO:	APPROVED:	DATE:

COMPANY:			
TITLE:			
CODE:	SIZE: B	DRAWING NO:	REV:
SCALE:		SHEET: 1 OF 1	

DRAWN:	DATED:
CHECKED:	DATED:
QUALITY CONTROL:	DATED:
RELEASED:	DATED: