ES 50: Introduction to Electrical Eng.

Explore EE, satisfy a Gen Ed requirement & have fun

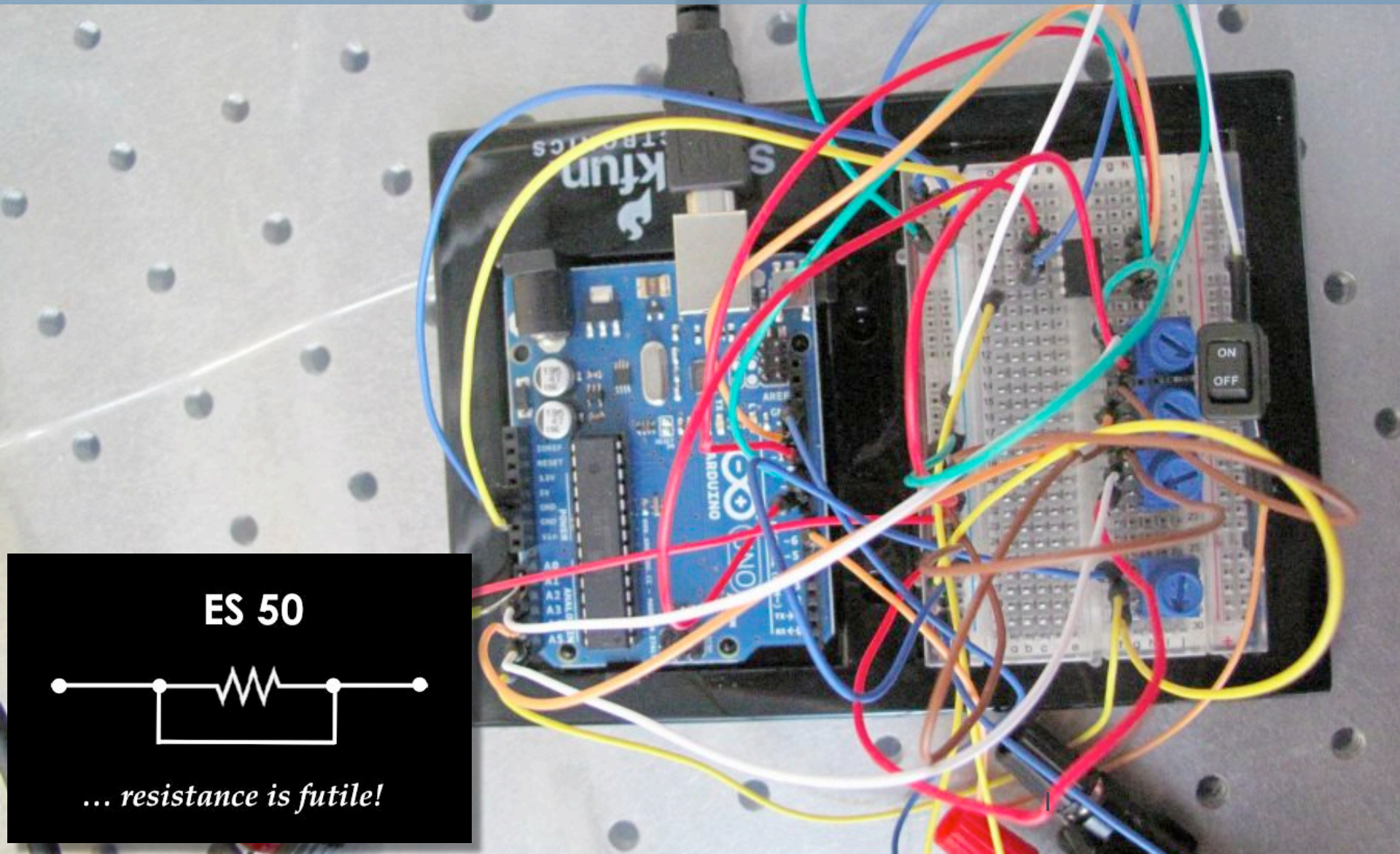

ES 50

… resistance is futile!

Lecture 3: Circuit Analysis

ES 50: Introduction to Electrical Engineering

Announcements

- **HW 1 is up. Due Saturday 9/19/15 5PM**
- **Review Sessions** by Brian and Peyton
  - **Wednesday 9/16, 7-9:30 PM, Pierce 301**
  - **Wednesday 9/17, 7-9:30 PM, Pierce 301**
- **Lab 1 starts** this week! You should all have been assigned a section. If you have any questions or issues, please contact Jessica (jessicalam@college) and cc Gu and Chris.
  - Lab write-ups are due 24hrs after completing your lab
- **Please complete online EH&S training** before you go to your first lab
  - Go to http://www.ehs.harvard.edu/training, click on the TMS button, log in, and take the lab100 (if newbie) or lab200 (for a refresher). This will take about 45min to complete.
- **No OH for Gu this Tues 1-2PM (9/15/15)**

- **Reminder:** Please no food in the lecture hall or lab. Please be especially careful to not open **peanut** products. At least one of us is highly allergic to peanuts.

Last Time:

- Analog vs. Digital signals: pros and cons
- Ohm's Law
- Ideal voltage and current sources
- The importance of reference direction in circuits

Alessandro Volta

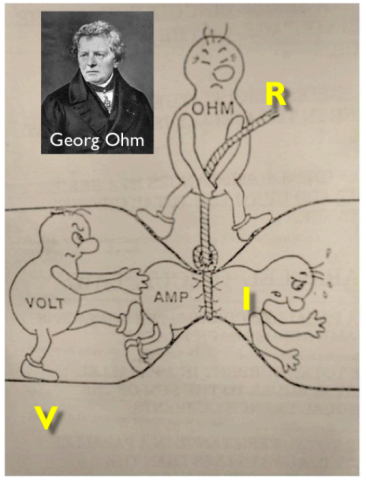

Adnre Marie-Ampere

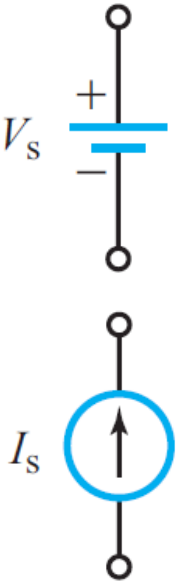

Today, we will cover:

- Electrical power
- Root mean square (RMS) and its relationship to power of AC signals
- Circuit topology and how to solve the circuit (find unknown currents and voltages)
- **Kirchhoff's current and voltage laws**: Definitions and examples
- Recipe for solving any circuit problem using Kirchhoff's laws

Power (p)

Rate of supplying or absorbing energy

$$p = \frac{dw}{dt} = \frac{dw}{dq}\frac{dq}{dt} = vi$$

Units: watts (W)

One Watt = Rate of one joule of work done per second

P = V * I or 1 W = 1 V x 1 A

Passive Sign Convention

- Why
  - To have a common way of describing the flow of *power* in a circuit
- What (approach)
  - Electric power flowing <u>into</u> a component is <u>positive</u>
    - So a *passive* component (light bulb, LED) that consumes power, will have *positive power dissipation*
  - Electric power flowing <u>out of</u> a component is <u>negative.</u>
    - So an *active* component (battery) or source of power, will have *negative power dissipation* since it *supplies power*
- What (in detail)
  - The <u>current</u> variable <u>is defined</u> so that <u>positive current enters the positive voltage terminal of the device.</u>
  - THE DIRECTION DEFINED BY CONVENTION MAY BE DIFFERENT FROM THE DIRECTIONS OF THE <u>ACTUAL VOLTAGE AND CURRENT FLOW.</u>

Power dissipated in a resistor

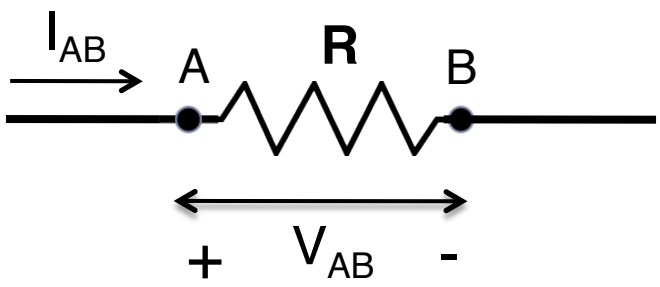

$$P_{resistor} = V_{AB} * I_{AB} = (I_{AB} * R) * I_{AB}$$

$$P_{resistor} = I_{AB}^2 * R$$

Note: $P_{resistor} > 0$ => resistors are *always* loads

Power dissipated in a toaster

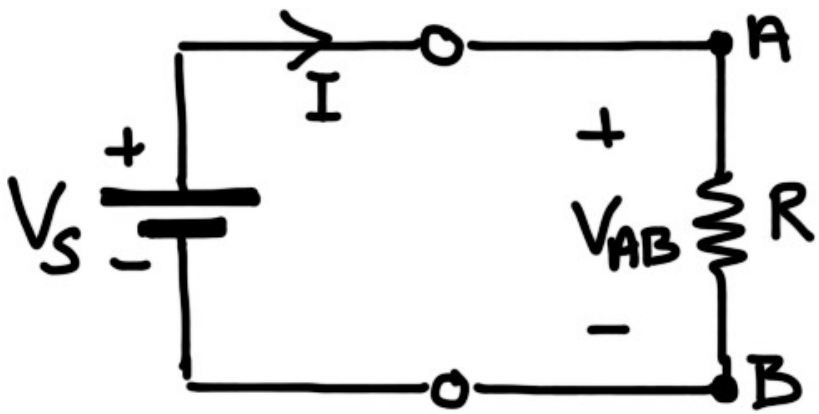

<u>Find:</u> $V_{AB} = V_S$

$I = I_{AB}$

Power dissipated by the toaster, $P_{toaster}$ =

$$V_{AB} * I_{AB} = I_{AB} * R * I_{AB} = I_{AB}^2 * R$$

Power supplied to the toaster =

$$V_S * I = V_S * (V_S / R) = V_S^2 / R$$

the same

Q: For more power do you need bigger or smaller R?

Power dissipated in a resistor

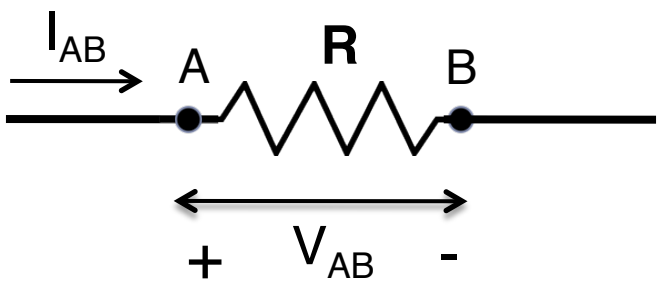

$$P_{resistor} = V_{AB} * I_{AB} = (I_{AB} * R) * I_{AB}$$

$$P_{resistor} = I_{AB}^2 * R$$

$$P_{resistor} = V_{AB}^2 / R$$

Note: $P_{resistor} > 0$ => resistors are *always* loads

In reality, a toaster is powered by an AC source. How does that work?

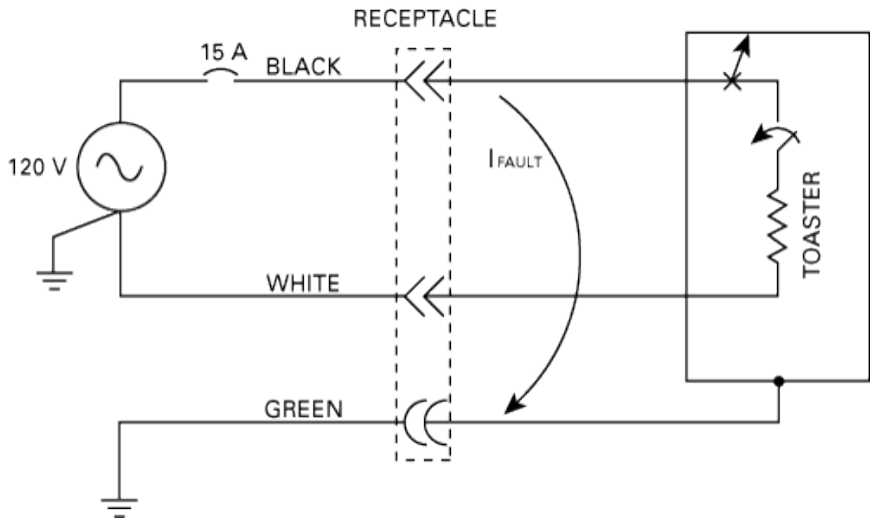

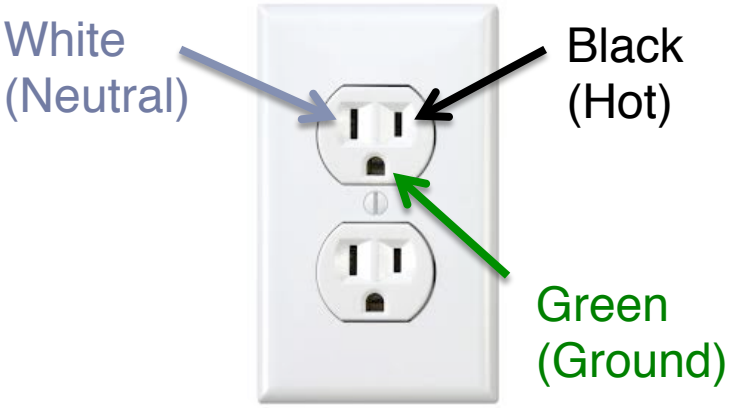

In reality, a toaster is powered by an AC source. How does that work?

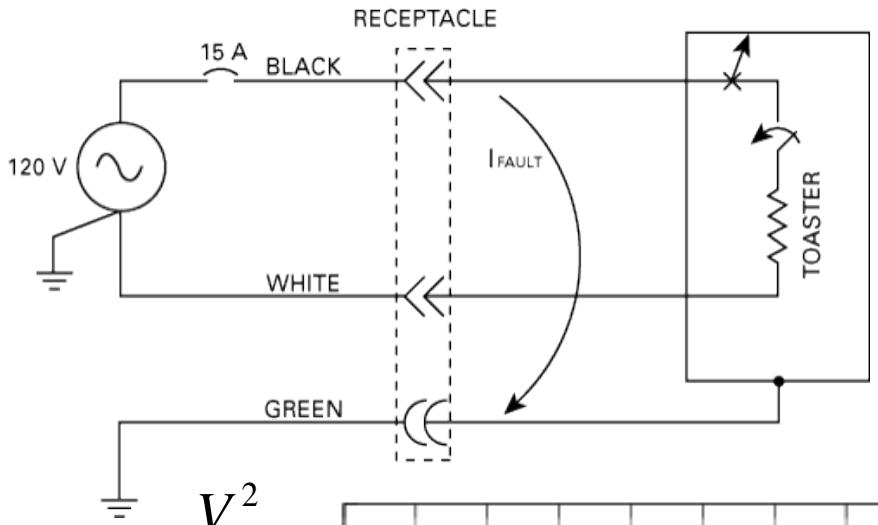

$$v(t) = V_{\max} \cdot \sin(2 \cdot \pi \cdot f_0 \cdot t)$$

$$p(t) = \frac{v^2(t)}{R} = \frac{V_{\max}{}^2}{R} \cdot \sin^2(2 \cdot \pi \cdot f_0 \cdot t)$$

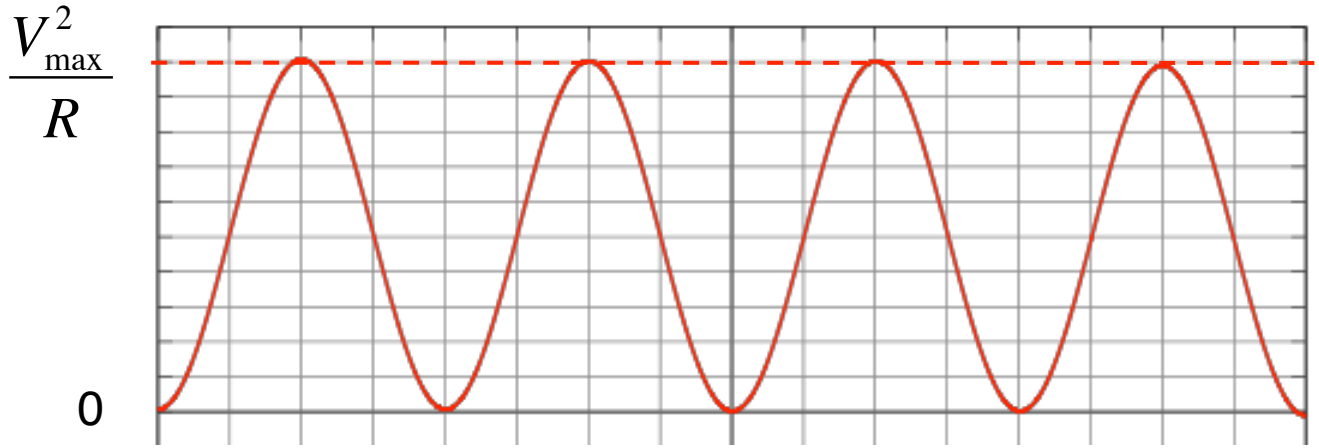

Q: Does the bread inside the toaster heat up and cool down periodically as one would infer from this plot of p(t)?

What is the average power delivered by the AC outlet to the toaster?

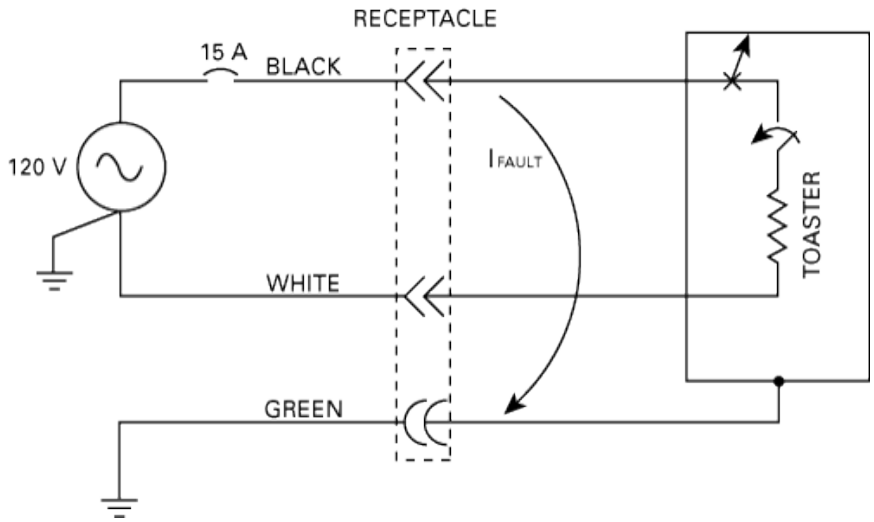

$$v(t) = V_{\max} \cdot \sin(2 \cdot \pi \cdot f_0 \cdot t)$$

$$p(t) = \frac{v^2(t)}{R} = \frac{V_{\max}^2}{R} \cdot \sin^2(2 \cdot \pi \cdot f_0 \cdot t)$$

$$P_{average} = average(p(t)) = average(v(t) * i(t))$$

$$P_{average} = \frac{1}{T} \int_0^T v(t) * i(t) dt$$

For a resistive load: i(t)=v(t)/R => $P_{average} = \frac{1}{T} \int_0^T v(t) * \frac{v(t)}{R} dt = \frac{1}{R} * \left[\frac{1}{T} \int_0^T v^2(t) dt \right]$

Now, we define a new voltage value, "root mean square" (RMS) voltage as:

$$V_{RMS} = \sqrt{\frac{1}{T} \int_0^T v^2(t) dt} = \frac{V_{\max}}{\sqrt{2}}$$

$$\Rightarrow P_{average} = \frac{V_{RMS}^2}{R} = \frac{V_{\max}^2}{2R}$$

Circuit Topology

- **Branch**: Single element, such as a resistor or source
- **Node**: Connection point between two or more branches
- **Extraordinary Node**: Connection point between at least 3 branches
- **Loop**: Closed path in a circuit

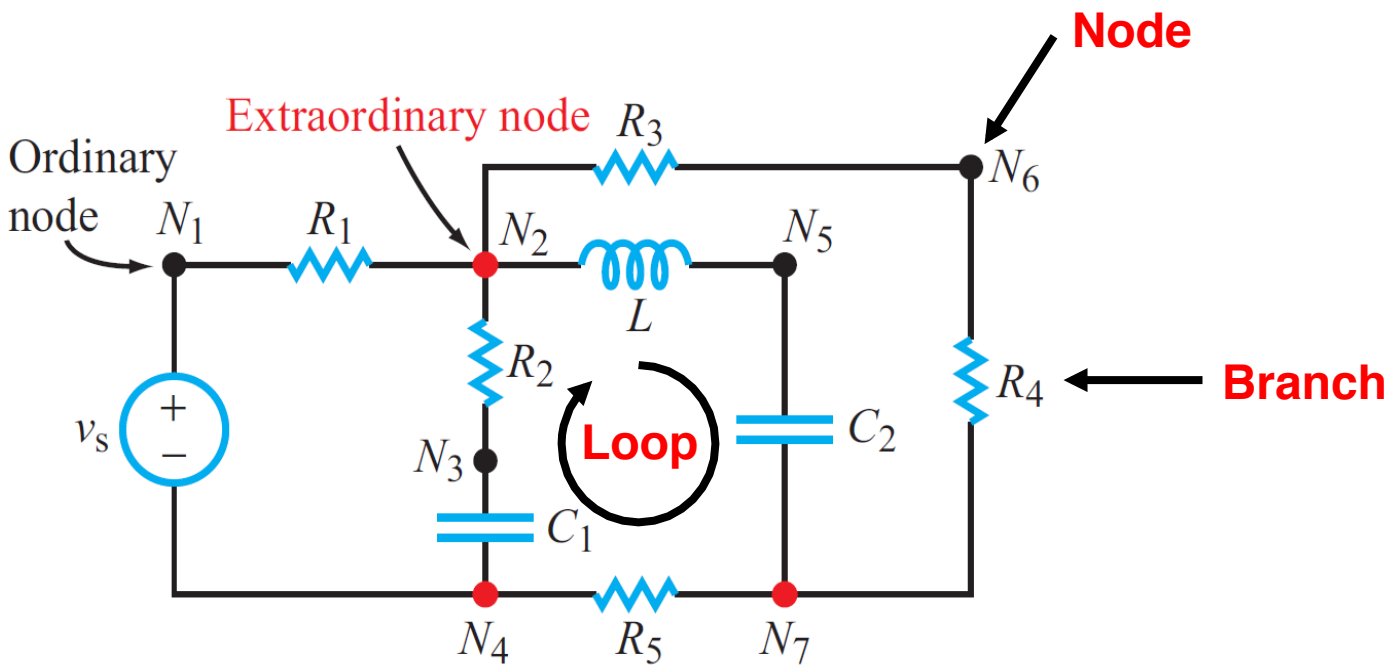

Example:
How many nodes, branches, loops?

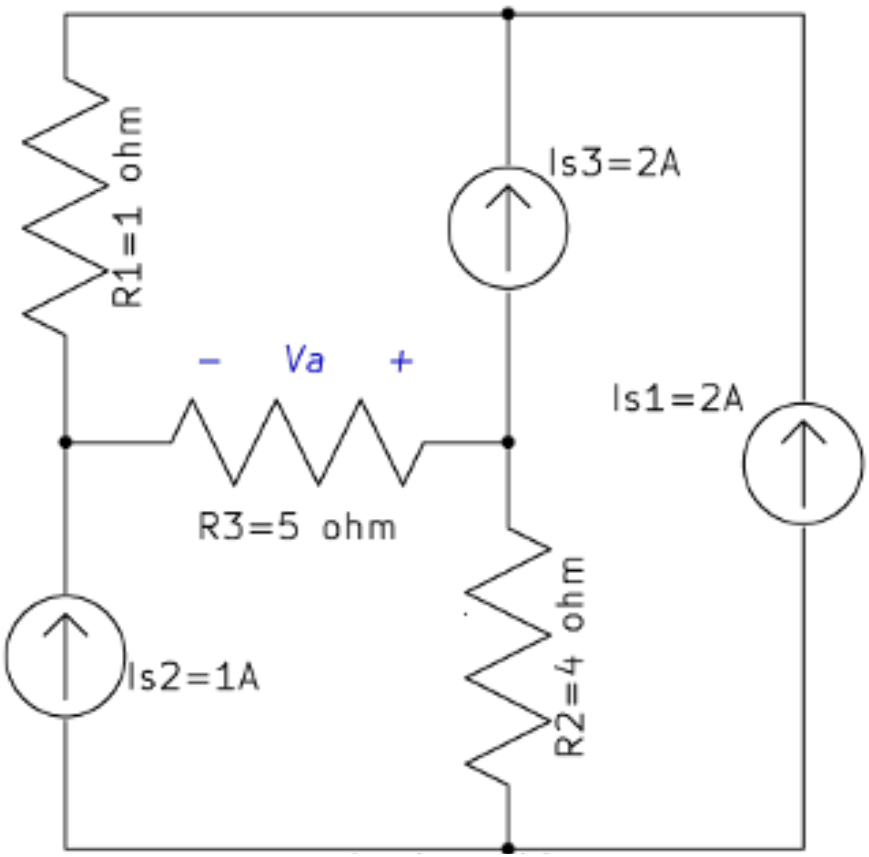

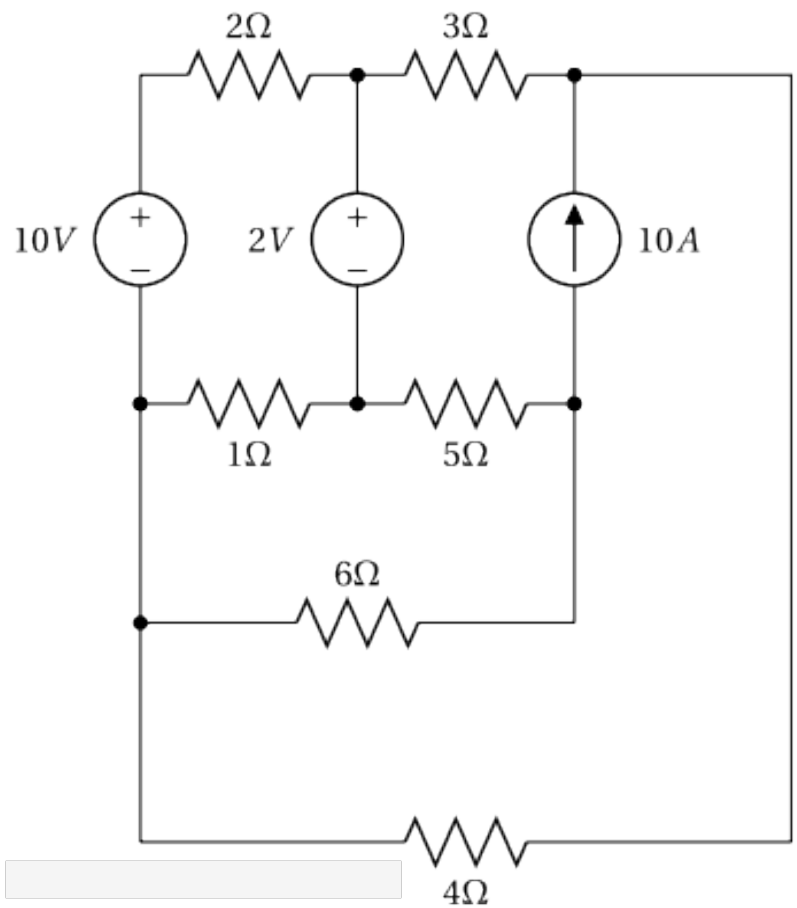

How do we solve these complex circuits? How do we find potentials (voltages) for each node, voltages between different nodes, and all branch currents?

Example:
How many nodes, branches, loops?

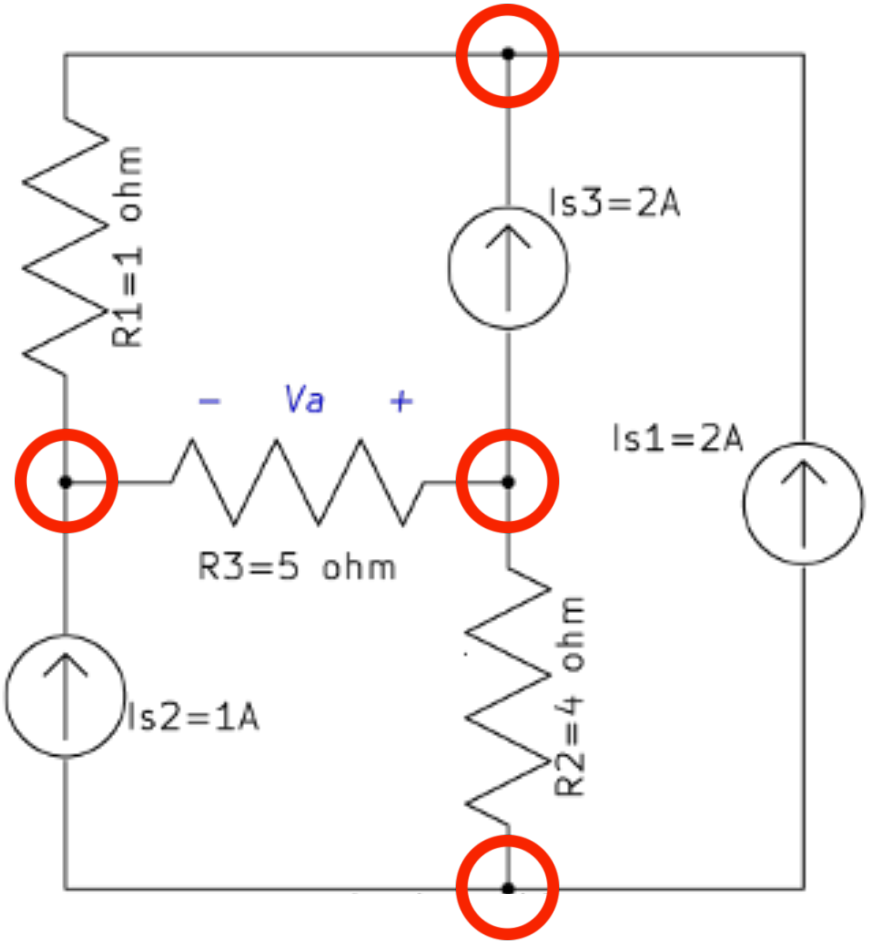

4 nodes

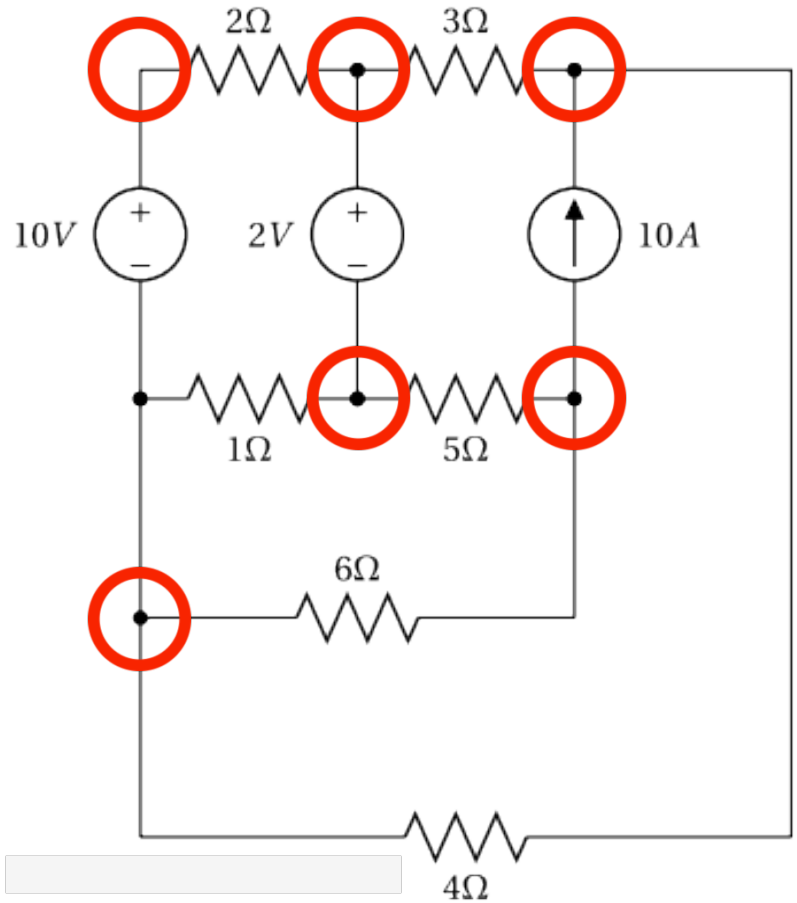

6 nodes

Example:
How many nodes, branches, loops?

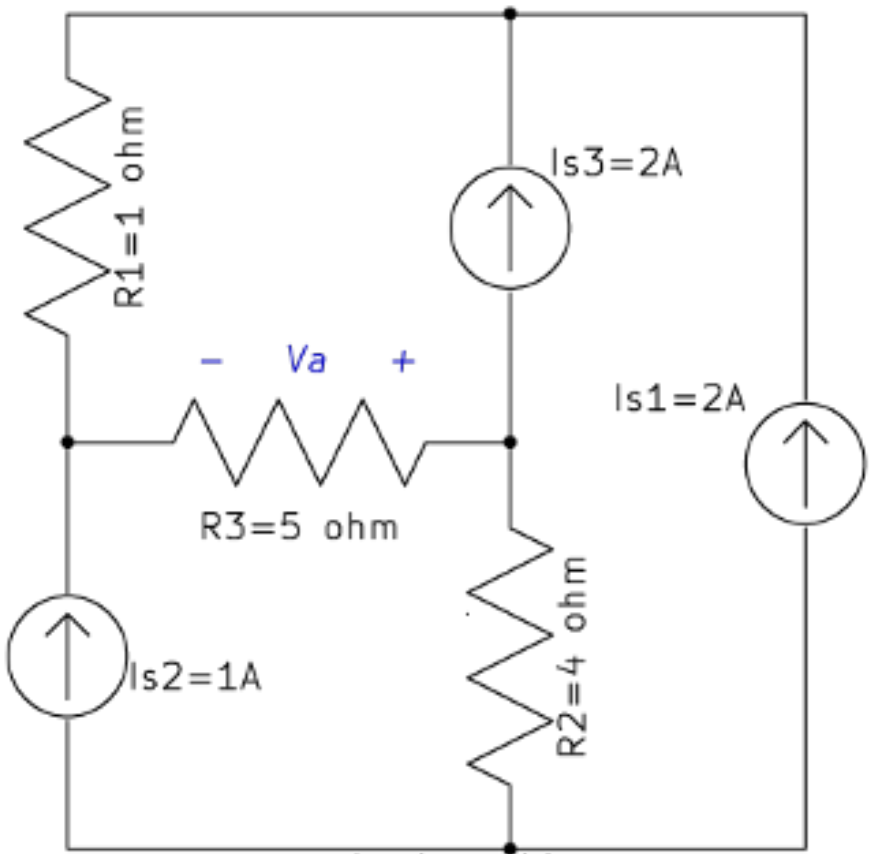

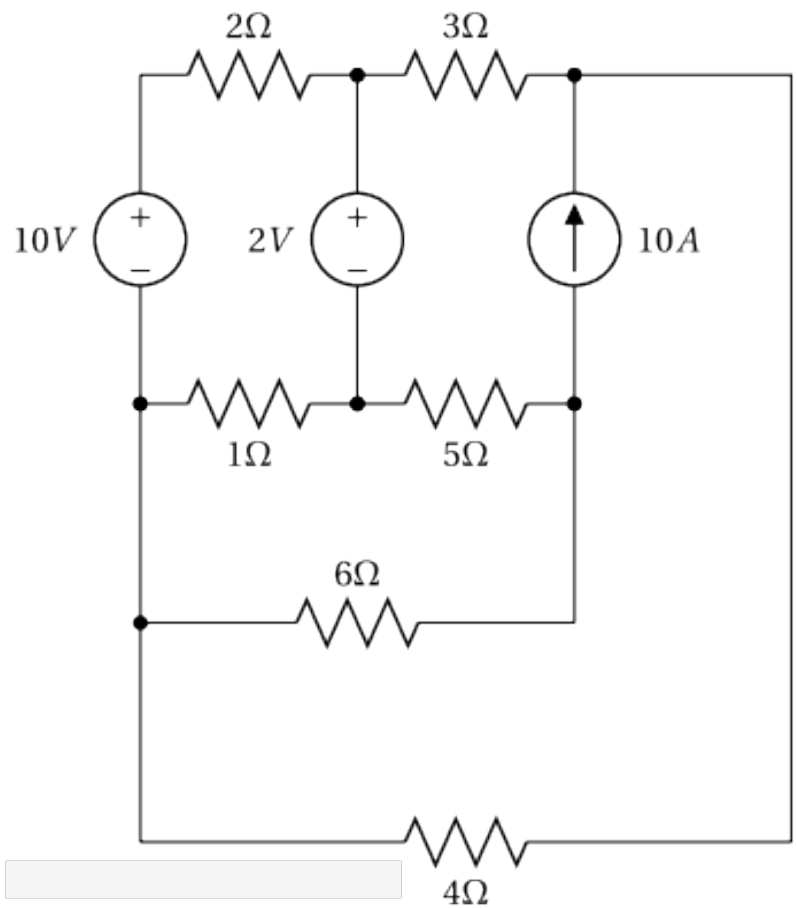

6 branches

9 branches

Example:
How many nodes, branches, independent loops?

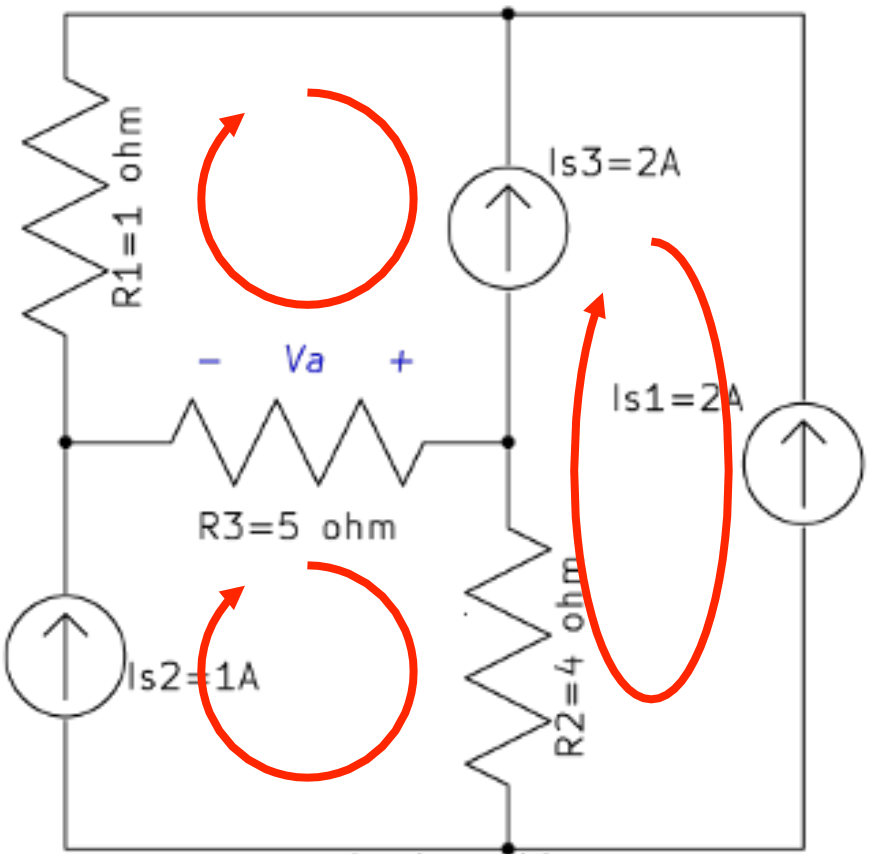

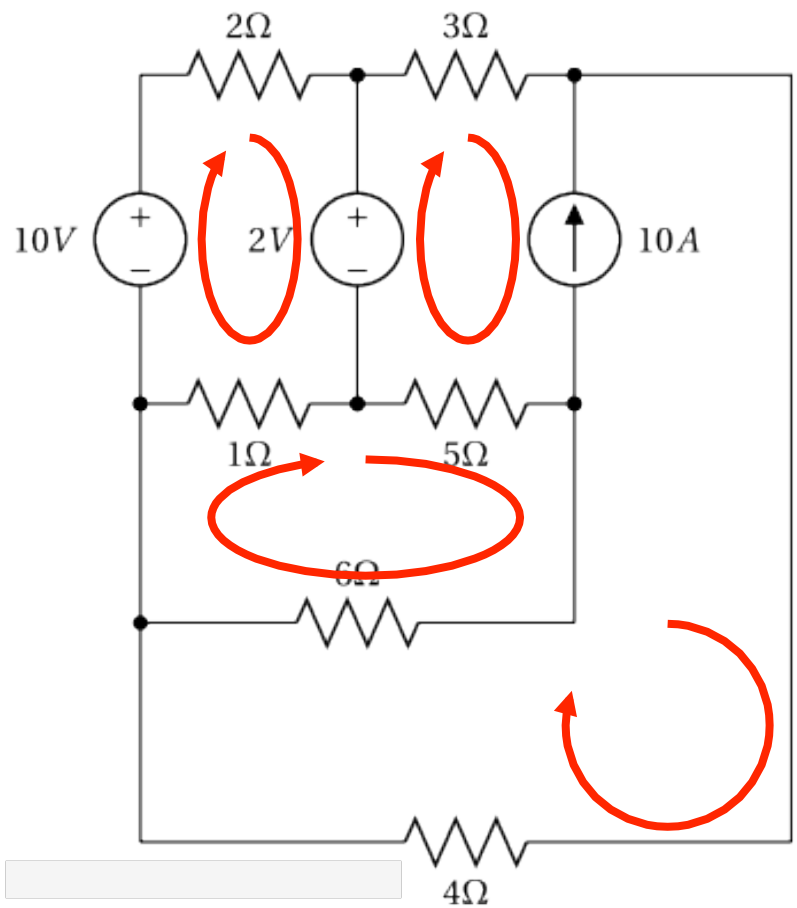

3 loops

4 loops

Kirchhoff's Laws

- **<u>Kirchhoff's Current Law (KCL):</u>**
  No charge (and therefore no current) is lost in a circuit
  => The sum of all currents at a node is equal to zero!
  Consequence: The total current entering the node, must equal the total current exiting the node.

- **<u>Kirchhoff Voltage Law (KVL):</u>**
  No net energy is created or lost in a circuit
  (it just changes from one form to another).
  => The net voltage around a loop is zero! However, the following convention must be used: If by going around a loop we encounter a first "+" terminal of a voltage (branch voltage), that voltage enters the sum with "+" sign. Otherwise, it enters the sum with "-" sign.
  Consequence: In a loop, the sum of all source voltages must equal the sum of all load voltages.

Kirchhoff's Current Law

Sum of currents entering/leaving a node is zero.

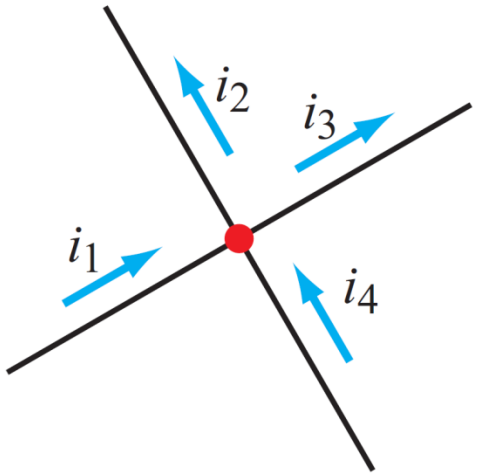

Note: By convention, currents entering a node have "+" sign and currents exiting a node have "-" sign.

$$\sum_{n=1}^{N} i_n = 0 \qquad \text{(KCL)},$$

$$i_1 - i_2 - i_3 + i_4 = 0$$

$$i_1 + i_4 = i_2 + i_3$$

If V_4, the voltage across the 4Ω resistor is 8V, determine I_1 and I_2.

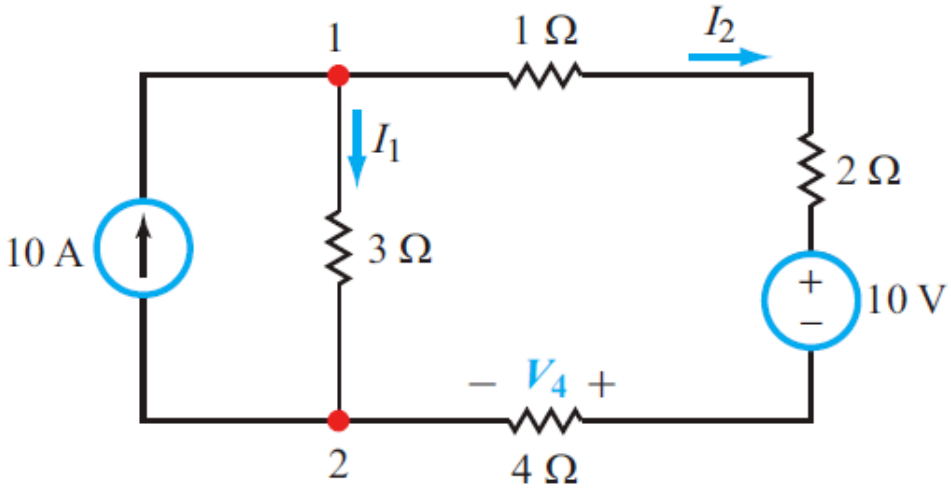

Solution: Applying Ohm's law,

$$I_2 = \frac{V_4}{4} = \frac{8}{4} = 2\text{ A}.$$

At node 1: $10 - I_1 - I_2 = 0.$

Hence,

$$I_1 = 10 - I_2 = 10 - 2 = 8\text{ A}.$$

Kirchhoff's Voltage Law (KVL)

Sum of voltages around a closed path (loop) is zero

Sum of voltage drops = sum of voltage rises

$$\sum_{n=1}^{N} v_n = 0 \qquad \text{(KVL)},$$

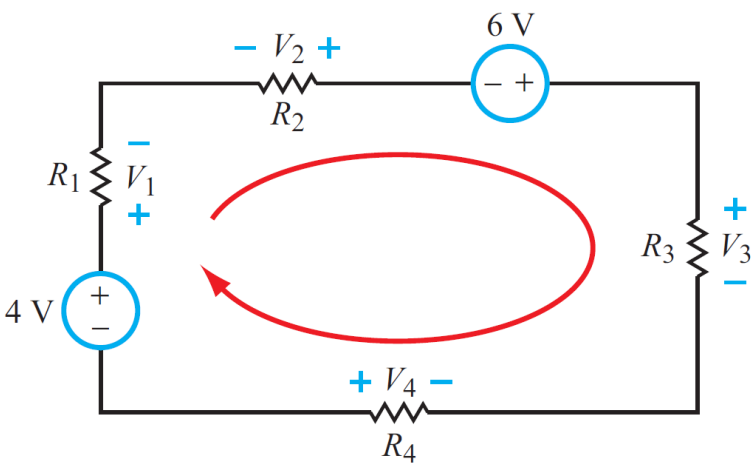

Sign Convention

- Add up the voltages in a systematic clockwise movement around the loop.
- Assign a positive sign to the voltage across an element if the (+) side of that voltage is encountered first, and assign a negative sign if the (−) side is encountered first.

$$-4 + V_1 - V_2 - 6 + V_3 - V_4 = 0$$

Example:
Using KCL & KVL to find I_2 and V_2.

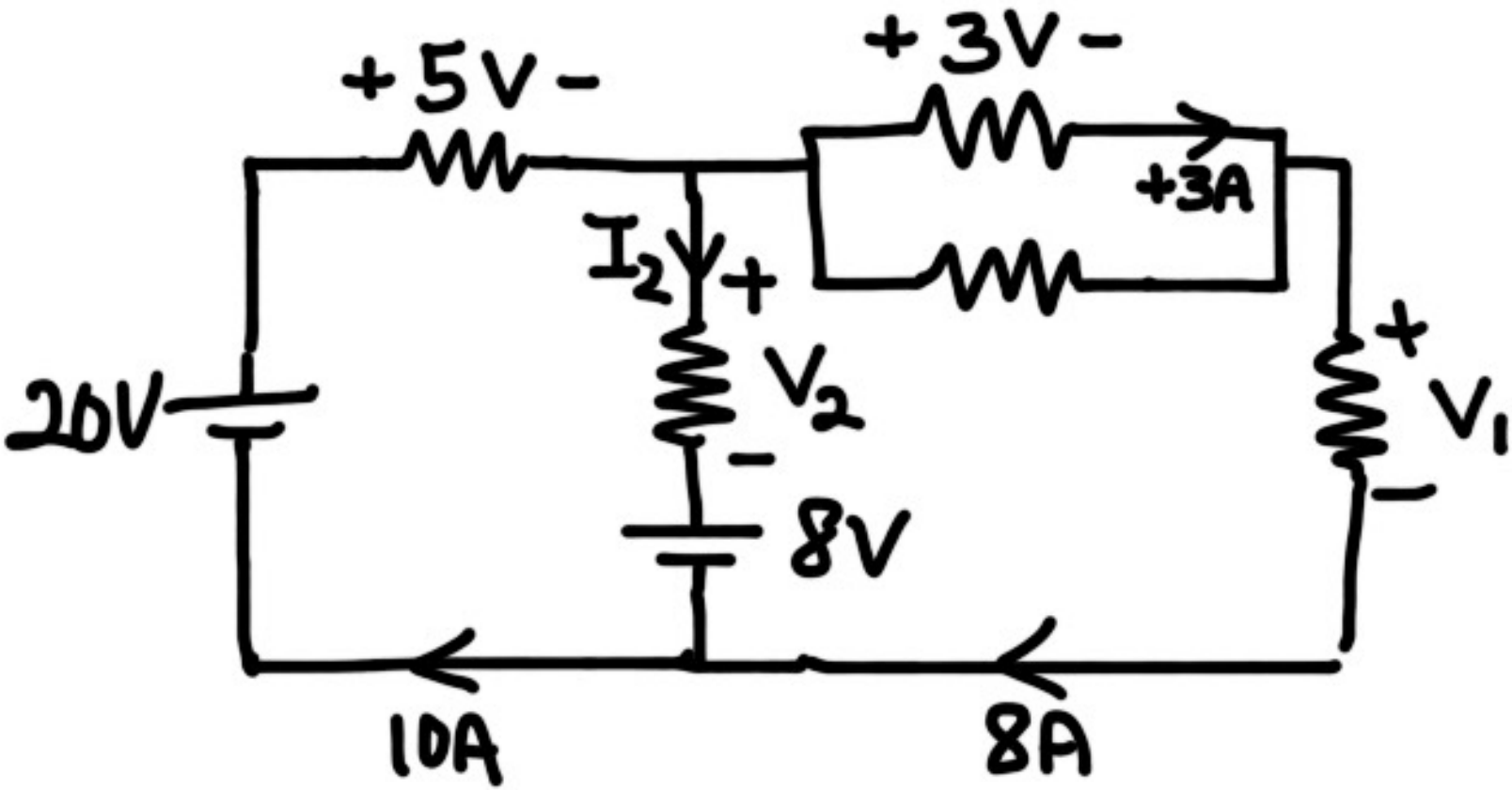

Example:
Using KCL & KVL find V_2, I_2, and V_1

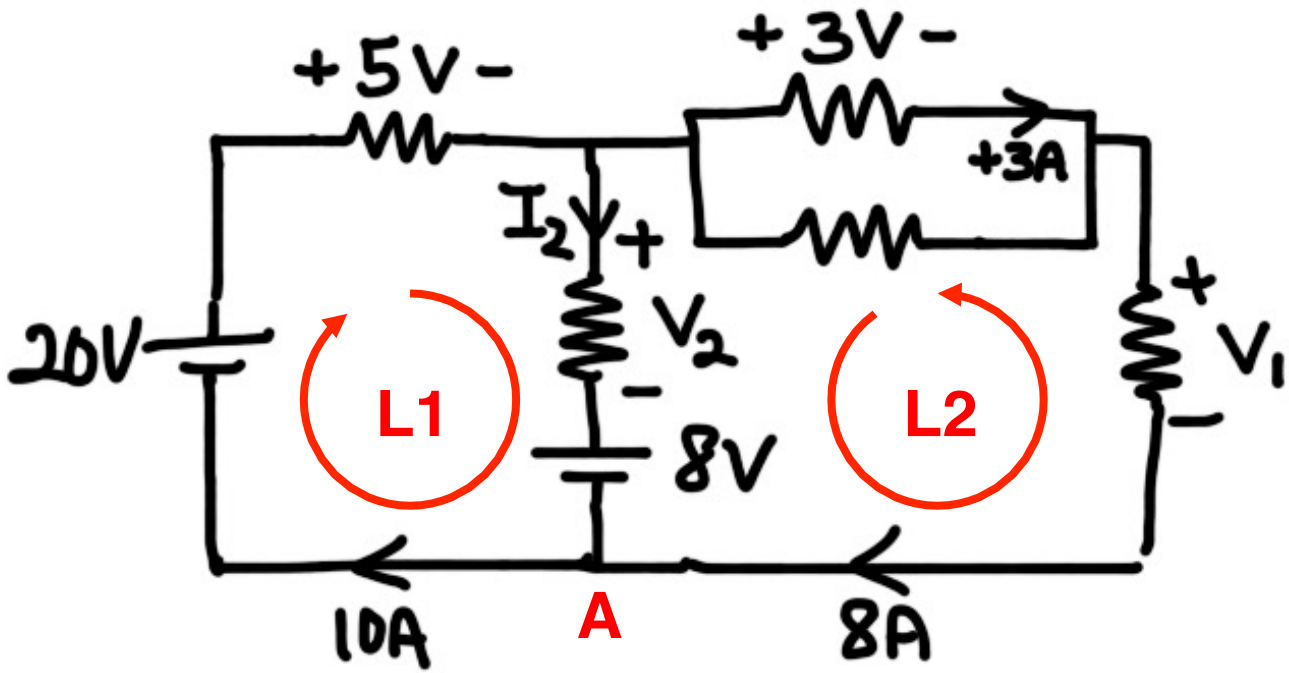

- KVL_L1 $5+V_2+8-20 = 0$ ➔ $V_2 = 7$ V
- KCL_A $8 + I_2-10 = 0$ ➔ $I_2 = 2$ A
- KVL_L2 $V_2+8-V_1-3 = 0$ ➔ $V_1 = 12$ V

Summary:
Kirchhoff's Current and Voltage Laws

KCL:
Sum of currents entering/leaving a node is zero
Note: By convention, currents entering a node have "+" sign and currents exiting a node have a "-" sign.

$$\sum_{n=1}^{N} i_n = 0 \qquad \text{(KCL)},$$

KVL:
Sum of voltages around a closed path is zero

$$\sum_{n=1}^{N} v_n = 0 \qquad \text{(KVL)},$$

Sign Convention

- Add up the voltages in a systematic clockwise movement around the loop.
- Assign a positive sign to the voltage across an element if the (+) side of that voltage is encountered first, and assign a negative sign if the (−) side is encountered first.

Simple (though not the most efficient) recipe for solving circuits…

1. Redraw the circuit and simplify it if possible
2. Label polarizations of active elements (sources) – this is already given in most cases
3. Choose current directions through each element arbitrarily
4. Label voltages across each passive element (e.g., resistors) so that current flows from "+" terminal to "-" terminal of the element
5. Use Ohm's Law to establish relationship between current **I** and voltage **V** for each resistor. Use following convention: if **I** is flowing from "+" to "-" terminal through resistor **R**, the voltage **V** is **V=I*R**
6. Use KCL for all extraordinary nodes to establish relationships between currents
7. USE KVLs for all (independent) loops to establish relationships between voltages
8. Solve the system of equations. DONE!

Example: 2012 quiz

Question 1: Easy Circuits (10 points)

a) **(3 points)** For the circuit below, label all resistor currents and resistor voltages according to reference directions used for passive elements.
b) (**6 points**) Find the currents going through each of the three resistors, with respect to the reference directions you chose in part (a)
c) **(1 points)** What is the total power generated by the source?

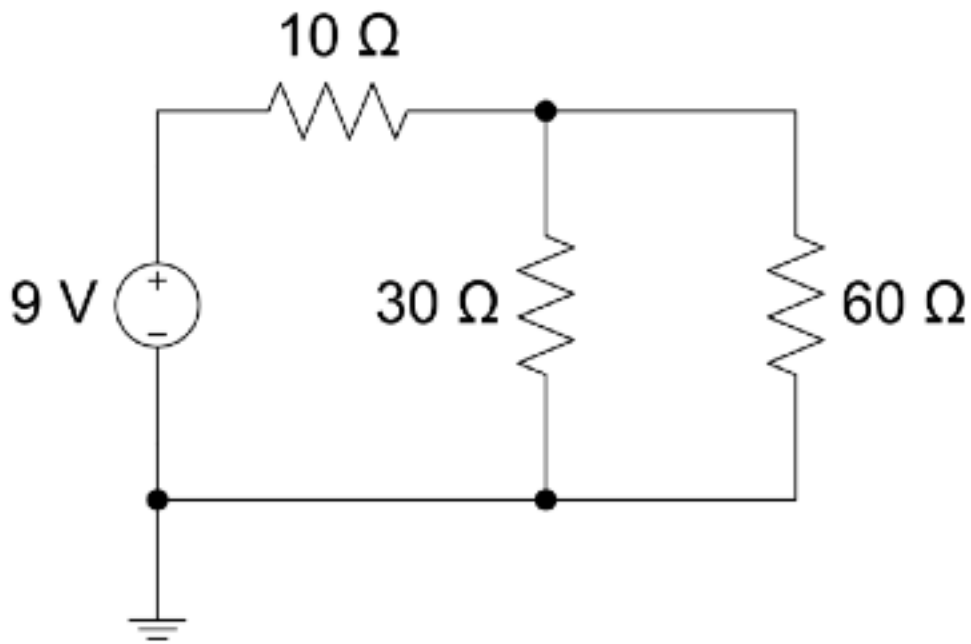

Example: 2012 quiz

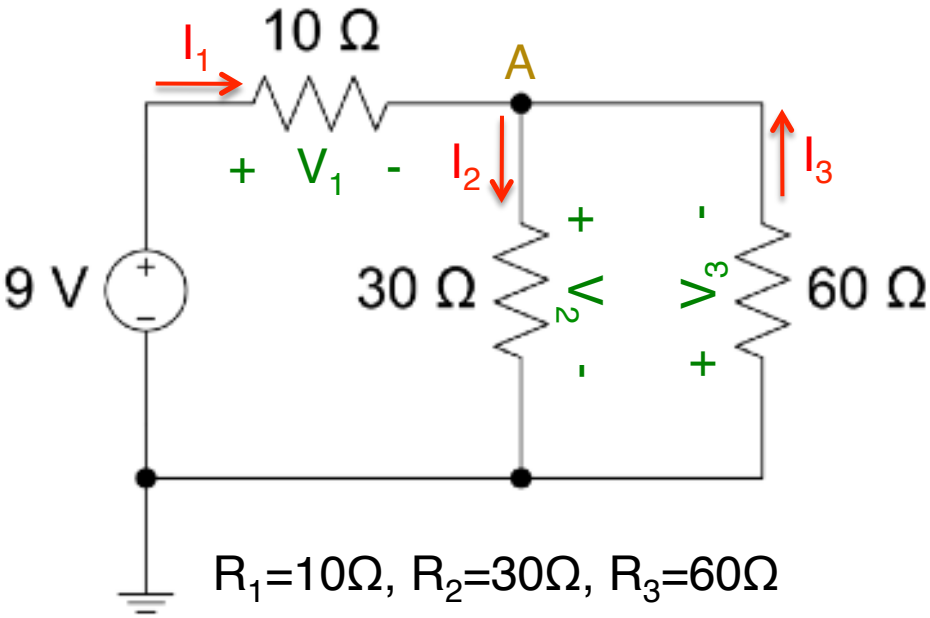

R_1=10Ω, R_2=30Ω, R_3=60Ω

$V_1=I_1*R_1$, $V_2=R_2*I_2$, $V_3=R_3*I_3$ (1)

Using the recipe:

1. Redraw the circuit and simplify it if possible (we will skip this for now)
2. Label polarizations of active elements (already done for us)
3. Choose current directions through each element arbitrarily
4. Label voltages across each passive element (e.g. resistors) so that current is flowing from "+" terminal to "-" terminal of the element (done)
5. Use Ohm's law to establish relationship between current **I** and voltage **V** for each resistor

Example: 2012 quiz

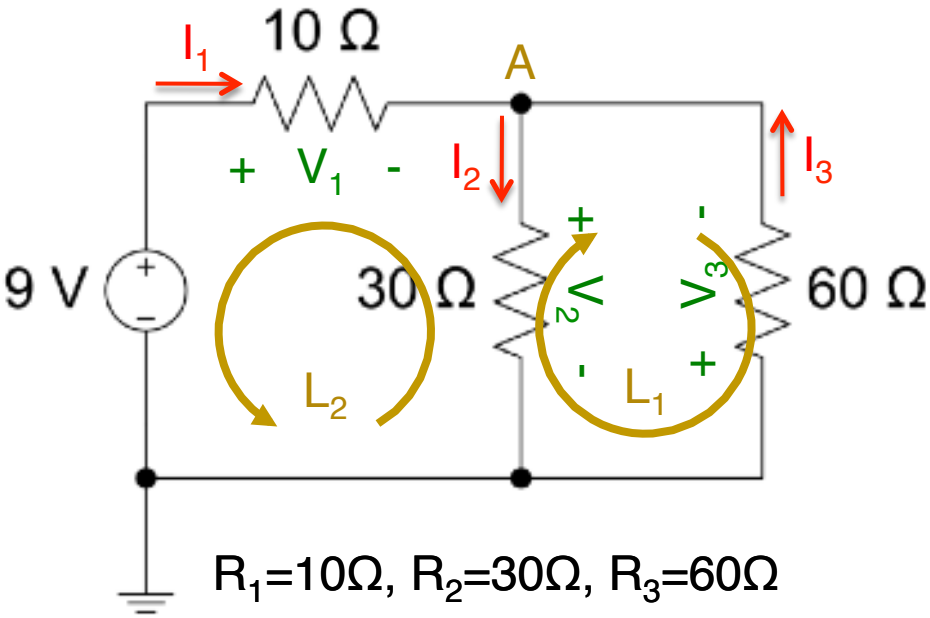

R_1=10Ω, R_2=30Ω, R_3=60Ω

$V_1=I_1*R_1$, $V_2=R_2*I_2$, $V_3=R_3*I_3$ (1)

KCL A: $I_1 - I_2 + I_3 = 0$ (2)

KVL L_1: $-V_2 - V_3 = 0$ (3)

KVL L_2: $9 - V_2 - V_1 = 0$ (4)

Using the recipe:

1. Redraw the circuit and simplify it if possible (we will skip it for now)
2. Label polarizations of active elements (already done for us)
3. Choose current directions through each element arbitrarily
4. Label voltages across each passive element (e.g. resistors) so that current is flowing from "+" terminal to "-" terminal of the element (done)
5. Use Ohm's Law to establish relationship between current **I** and voltage **V** for each resistor
6. KCL for all nodes (except for one) to establish relationships between currents
7. KVL for all (independent) loops to establish relationships between voltages

Example: 2012 quiz

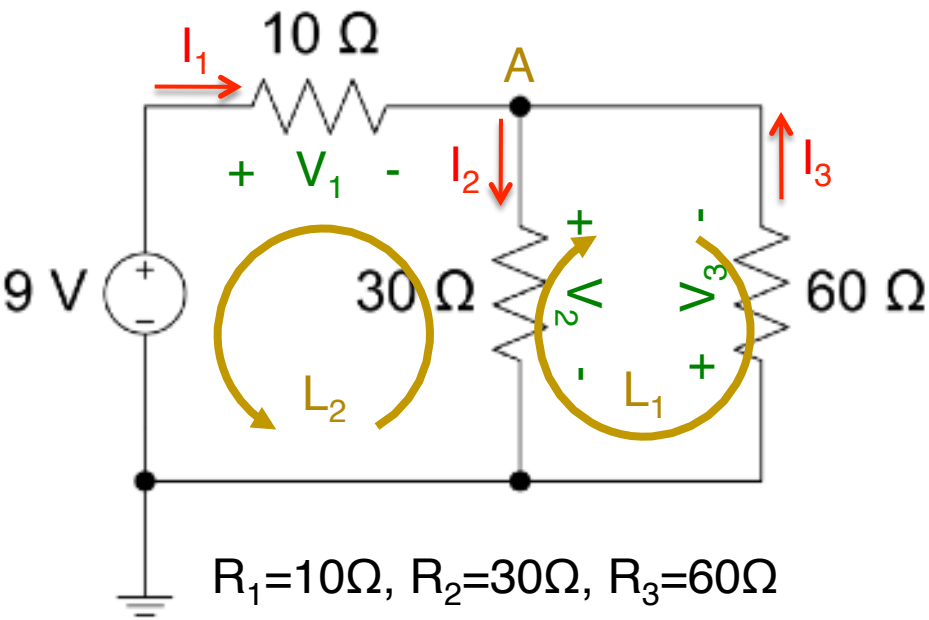

R_1=10Ω, R_2=30Ω, R_3=60Ω

$V_1=I_1*R_1$, $V_2=R_2*I_2$, $V_3=R_3*I_3$ (1)

KCL A: $I_1 - I_2 + I_3 = 0$ (2)

KVL L_1: $-V_2 - V_3 = 0$ (3)

KVL L_2: $9 - V_2 - V_1 = 0$ (4)

Using the recipe:

8. Solve the equations

Eqs. 1 & 3 ➔ $R_2*I_2 = -R_3 * I_3$ ➔ $\mathbf{I_2 = -2 * I_3}$

Eq. 2 ➔ $I_1 + 2I_3 + I_3 = 0$ ➔ $\mathbf{I_1 = -3 * I_3}$

Eqs. 1 & 4 ➔ $9 = R_1I_1 + R_2I_2$

Substituting for I_1 and I_2 we get:
$9 = R_1I_1 + R_2I_2$
$9 = 10*(-3I_3) + 20*(-2I_3) = -90\ I_3$

I_3 = -0.1A, V_3 = -6 V
I_2 = -2 I_3 = 0.2 A, V_2 = 6 V
I_1 = -3 I_3 = 0.3A, V_1 = 3 V

Power generated/supplied by the source:
P = 9V * I_1 = 2.7 W