ES 50: Introduction to Electrical Eng.

Explore EE, satisfy a Gen Ed requirement & have fun

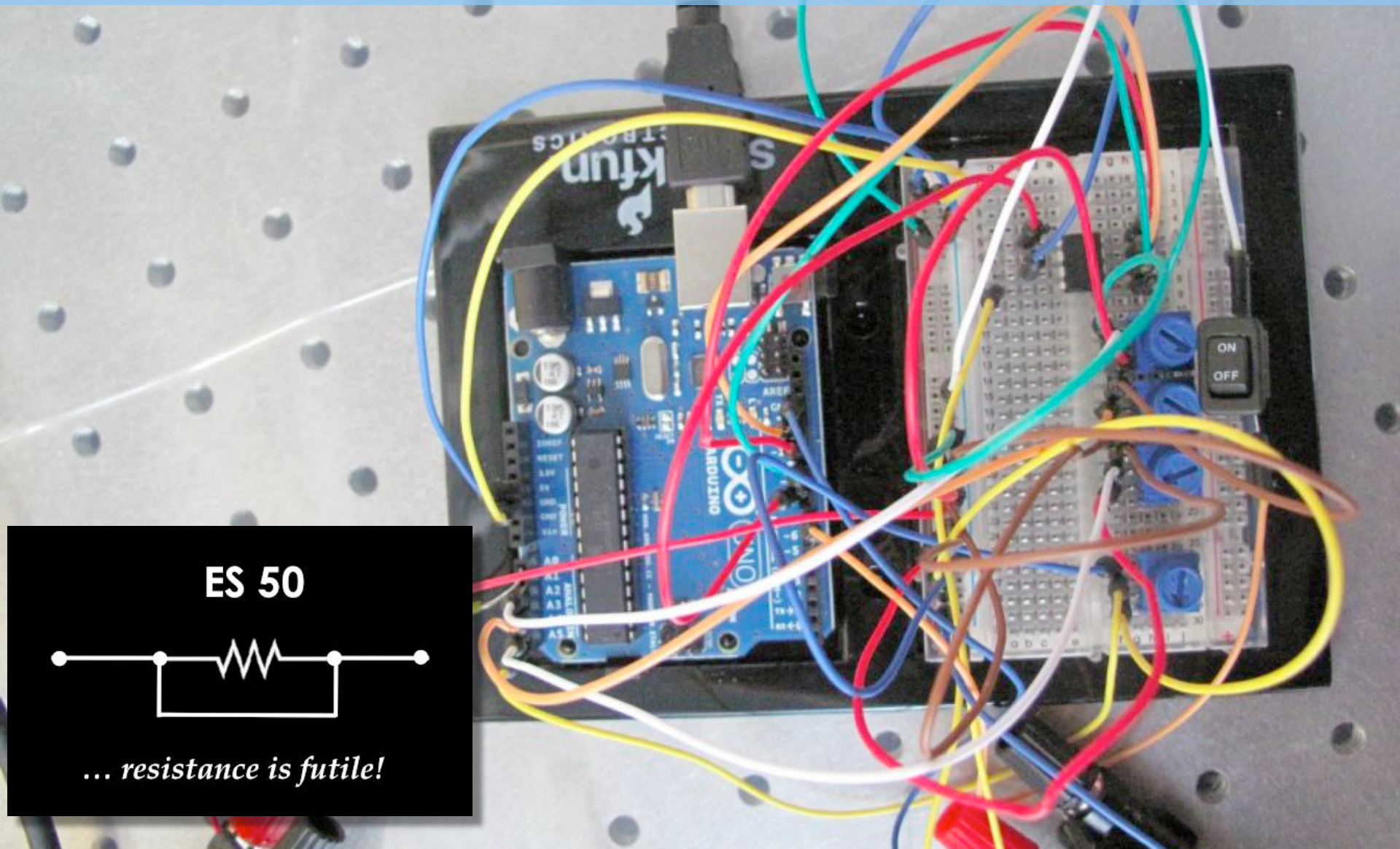

ES 50

… resistance is futile!

Lecture 19: Devices & Moore's Law

November 30, 2015

HARVARD
School of Engineering and Applied Sciences

Updates

Final Project Fair

- Final Project Fair will be Wed Dec 9 11-130
- Lunch will be provided
- Joint with ES 51 & ES 52

My Office Hours

- Tomorrow 3-4 in Pierce 287

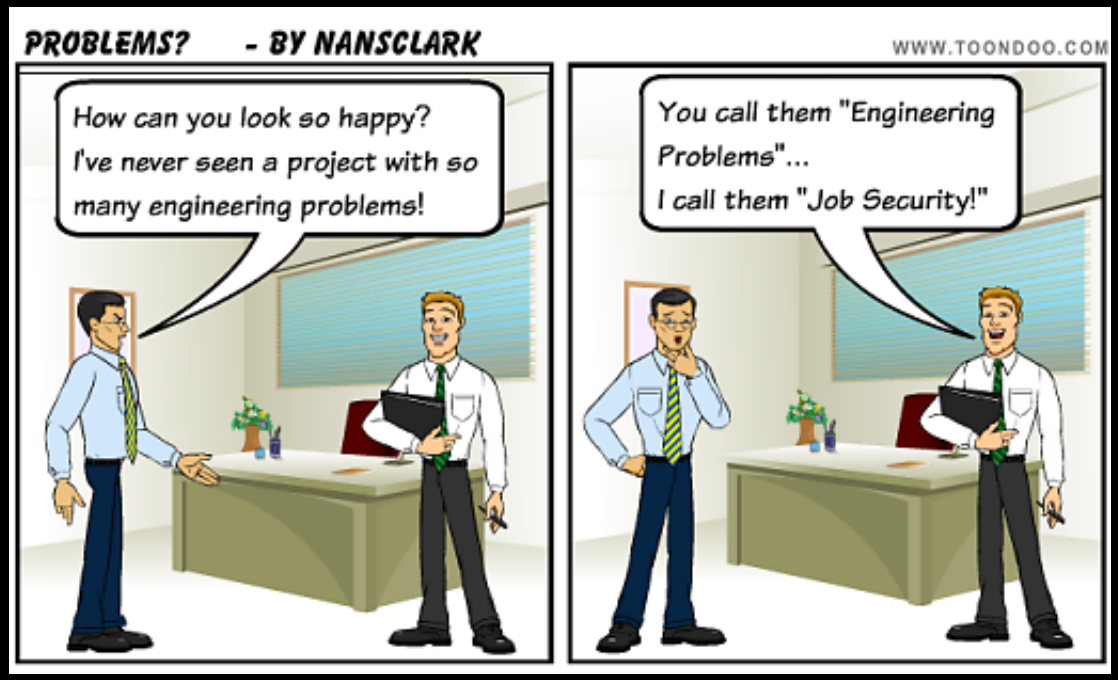

Design Skills Survey

- Not, the Q Guide
- This will show up as a Pset & will be a completion grade. It won't take more than 10 min info will be posted soon.

What underlies the actual logic gates?

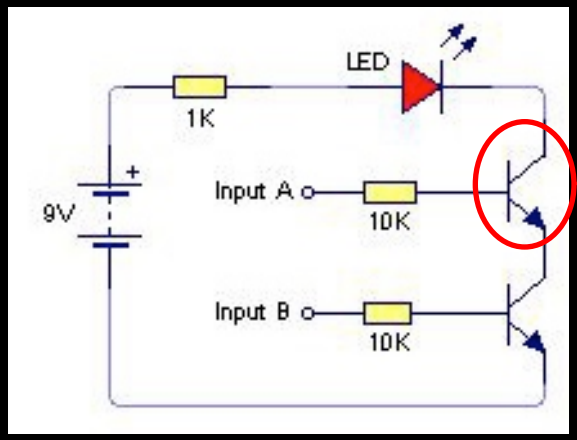

How does this 'device' have to behave? Can we figure it out?

2 Input AND

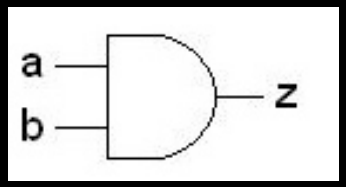

When either A or B is 0 (low), there is no current going through the LED.

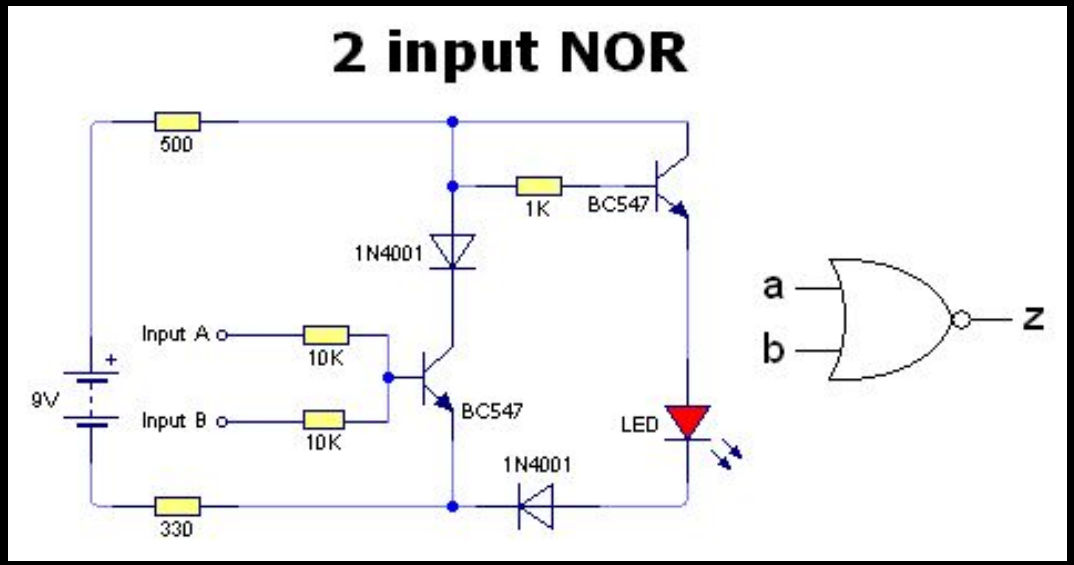

When either A or B is 1 (high), there IS current going through the LED.

What underlies the actual logic gates?

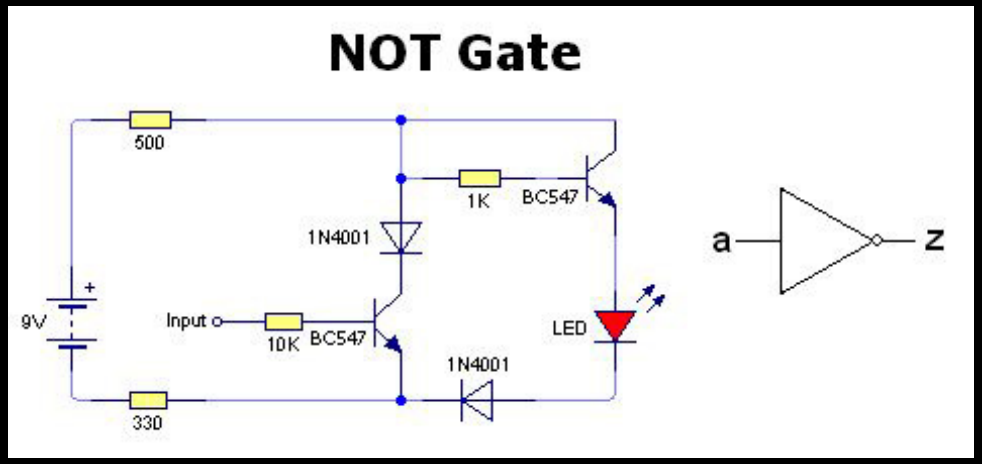

When the input is HIGH, there is no light given off by the LED.
When the input is LOW, there IS light given off by the LED.

'gate'

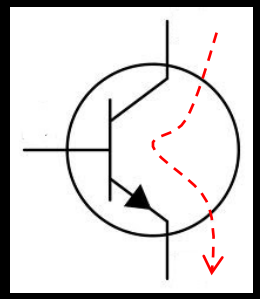

current

So this symbol must represent an influential device whose operation underlies logic gates

Hypothesis: the 'input' to the gate determines whether or not current flows through the device

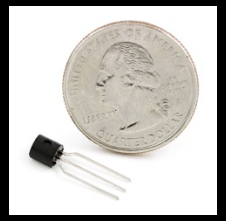

sparkfun

Component BC547

An electronic switch, fairly compact: how does it work, what is it made of?

The ‘perfect’ electronic switch: what criteria?

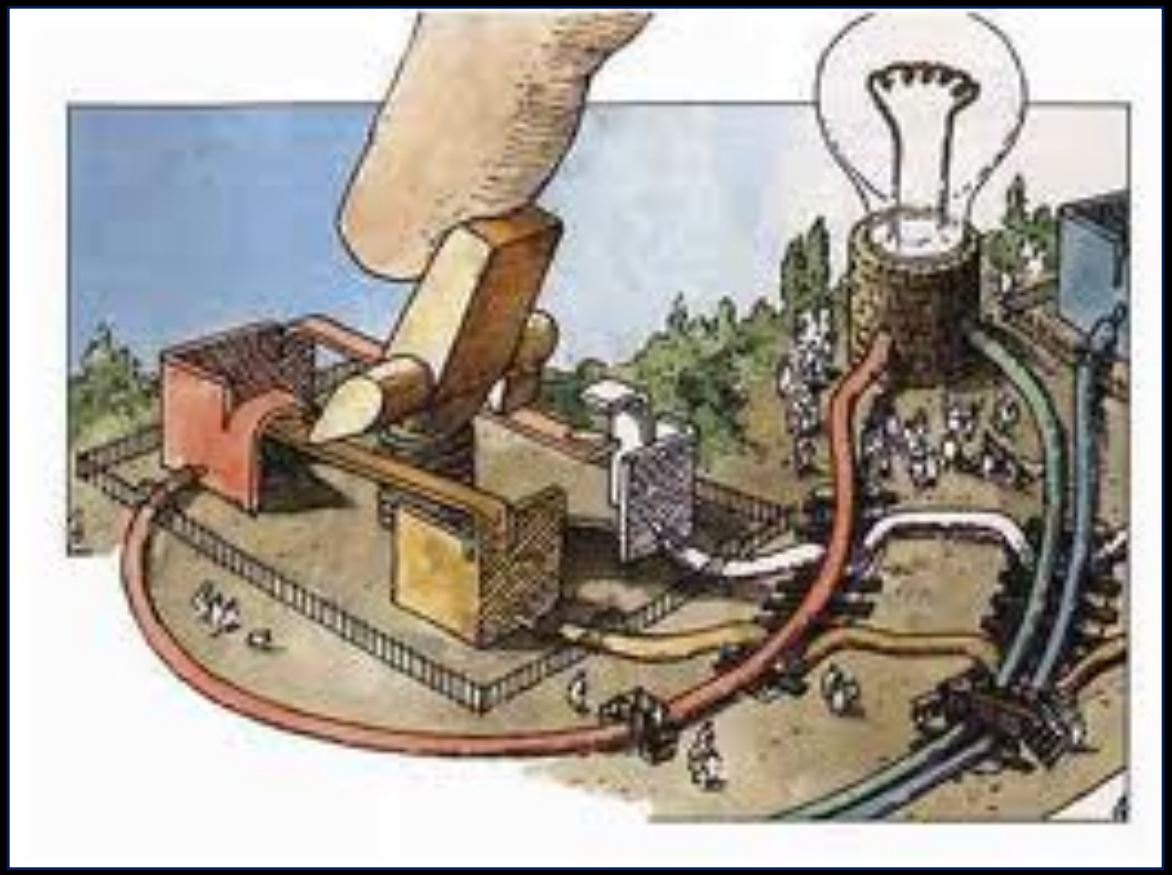

David Macaulay

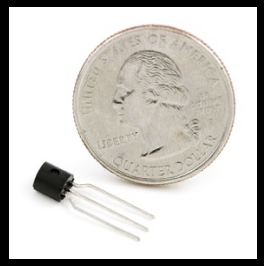

In fact, looking into the gates and amplifiers we've worked with….

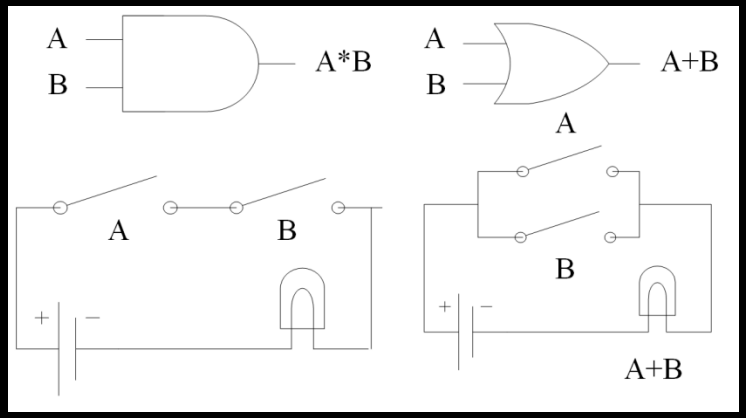

Basic Logic Gates

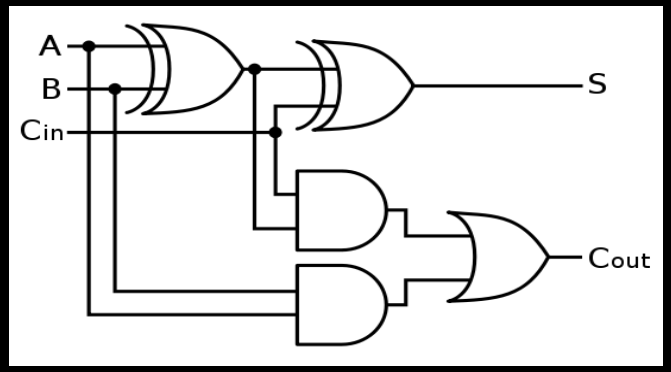

Logic Circuits, Finite State Machines

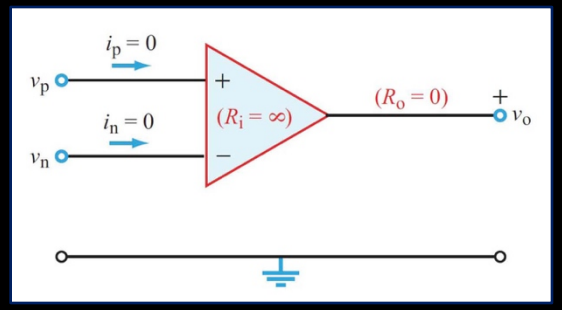

The Op Amp!

WHAT MAKES ALL THIS POSSIBLE?

The (semiconductor) transistor!

Bipolar Transistor

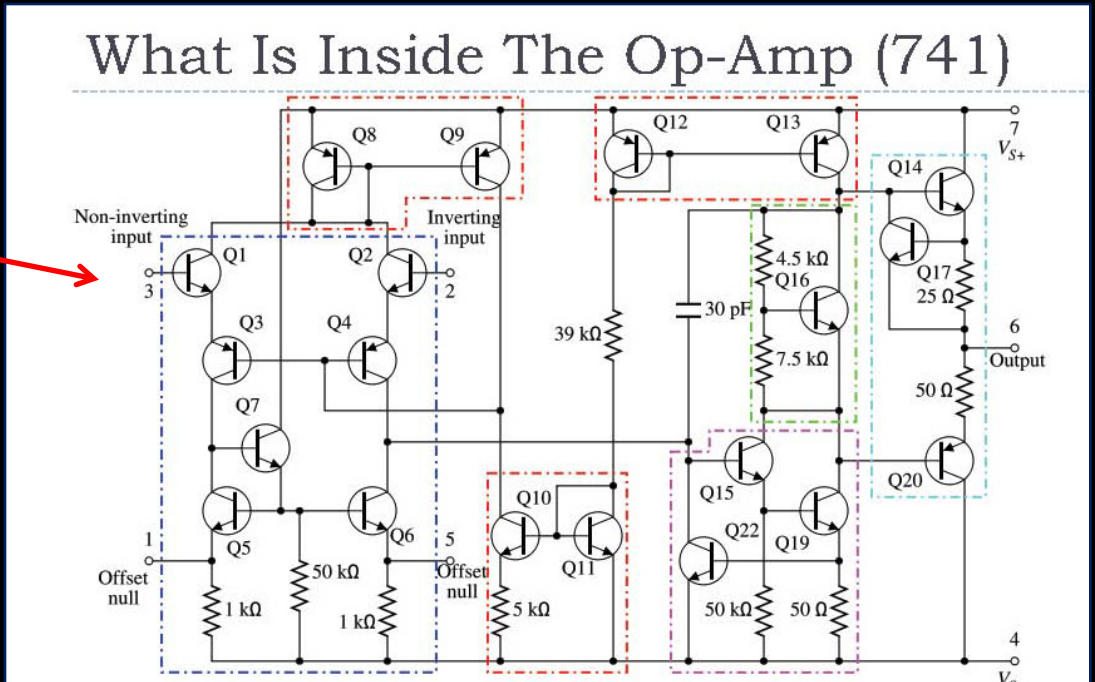

A component level diagram of the common 741 op-amp.

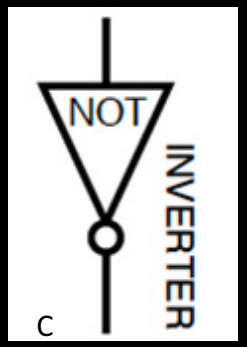

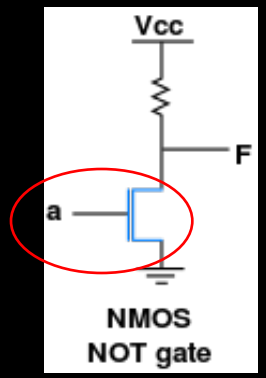

Inventing a compact, all-electronic switch

							VIIIA
		IIIA	IVA	VA	VIA	VIIA	2 He 4.003
		5 B 10.811	6 C 12.011	7 N 14.007	8 O 15.999	9 F 18.998	10 Ne 20.183
IB	IIB	13 Al 26.982	14 Si 28.086	15 P 30.974	16 S 32.064	17 Cl 35.453	18 Ar 39.948
29 Cu 63.54	30 Zn 65.37	31 Ga 69.72	32 Ge 72.59	33 As 74.922	34 Se 78.96	35 Br 79.909	36 Kr 83.80
47 Ag 107.870	48 Cd 112.40	49 In 114.82	50 Sn 118.69	51 Sb 121.75	52 Te 127.60	53 I 126.904	54 Xe 131.30
79 Au 196.967	80 Hg 200.59	81 Tl 204.37	82 Pb 207.19	83 Bi 208.980	84 Po (210)	85 At (210)	86 Rn (222)

If we had our choice of any materials to include in our switch, what would we choose, and why?

Metals are great 'conductors' but they might conduct all the time… and be 'difficult' to turn off

Cu, Au, Ag…..

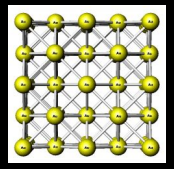

If we want to put lots of devices together, we might want parts of the device to conduct like metals, parts to be insulating….

Inventing a compact, all-electronic switch

An 'ideal' material might be almost as conductive as METAL, but also could be INSULATING

This is the ideal material and ideal electronic switch that researchers were looking for at the end of World War II – let's step back and bit and understand the context

The ultimate switch and AMPLIFIER:

VACUUM TUBES

A small change in (3) can produce a large change in the current between (1) and (2)

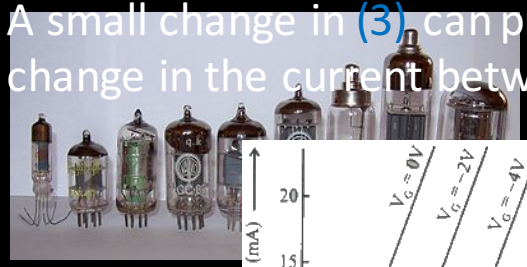

Source:

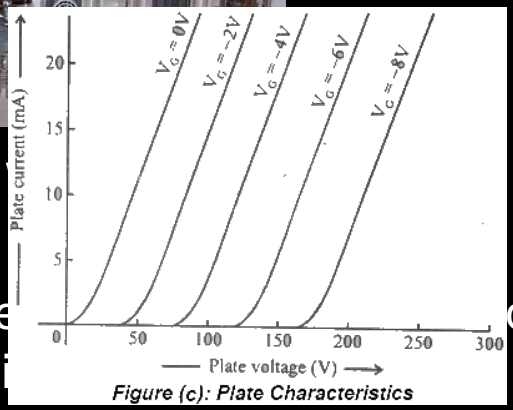

Figure (c): Plate Characteristics

- 'Boil off'
- Regulate de
- Encase i

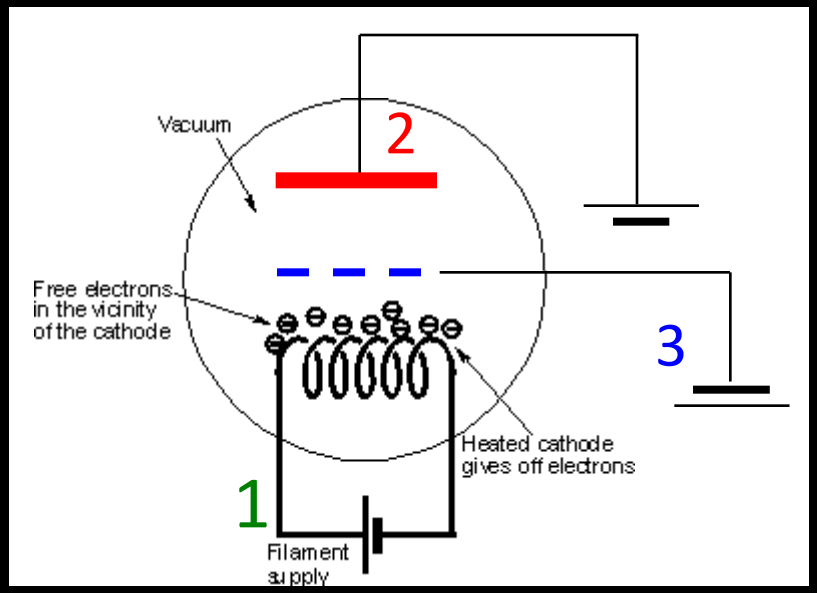

Vacuum tubes powered the first electronic computer

Electronic Numerical Integrator And Computer (ENIAC), 1948

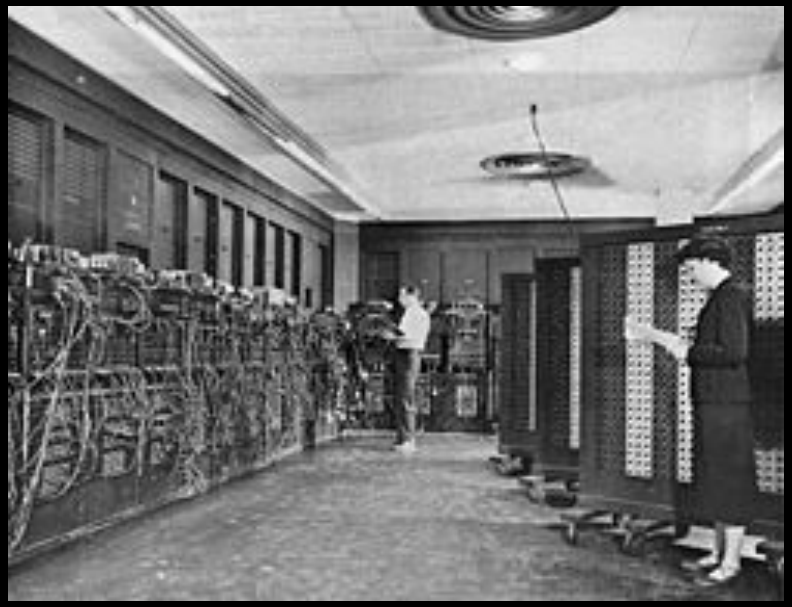

- First electronic general-purpose computer
- 17,468 vacuum tubes, 70,000 resistors, 10,000 capacitors…~ 5 million hand-soldered joints
- ~ 5.8 x 3 x 80 feet, took up 680 sq. ft., consumed 150 kW power
- Division took 28 milliseconds

At Bell Labs (and other places in the world), the hunt was on for an all-electronic switch IN A SEMICONDUCTOR.

What's 'wrong' with vacuum tubes?

What is a semiconductor? Why is it such a big deal?

Which of these materials is a

- Metal (conductor)?
- Insulator ?
- Semiconductor?

How would you know?

http://www.mineralminers.com/html/phantom_quartz_crystal.htm
http://www.irocks.com/Gold_Crystals_Gold_Nuggets.html
http://images-of-elements.com/silicon.php

Metals, insulators, semiconductors: all about energies of electrons within BANDS

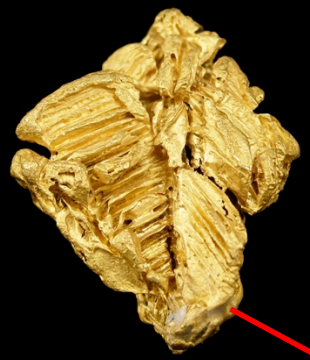

Metals: no 'gap' in available electron states
Insulators: large gap
Semiconductors: in-between gaps, & *tunable*

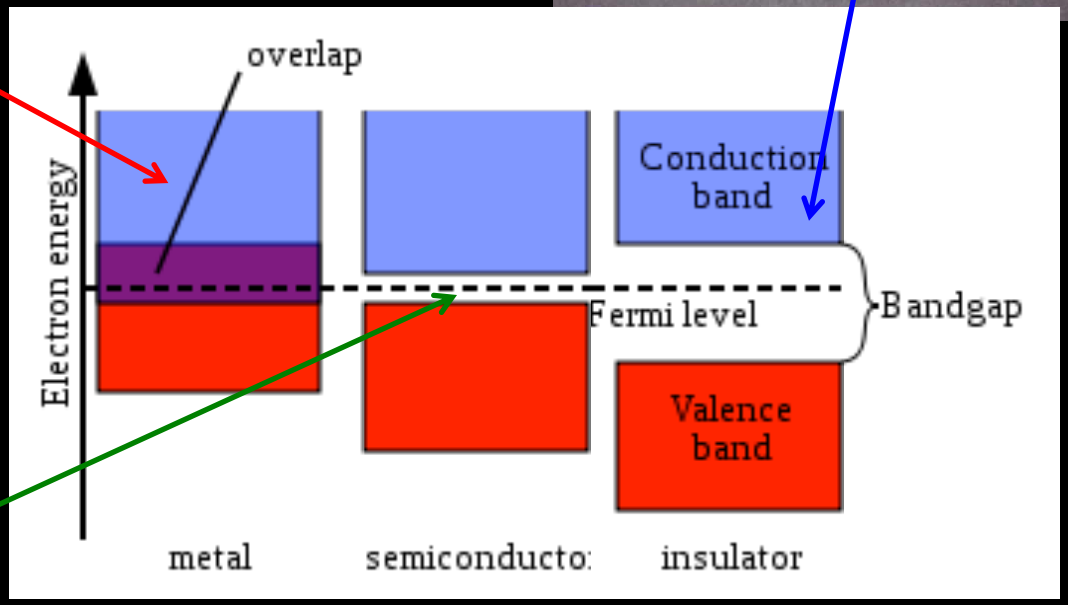

The First Solid State Transistor

1956 Nobel Prize to Shockley, Bardeen, & Brattain

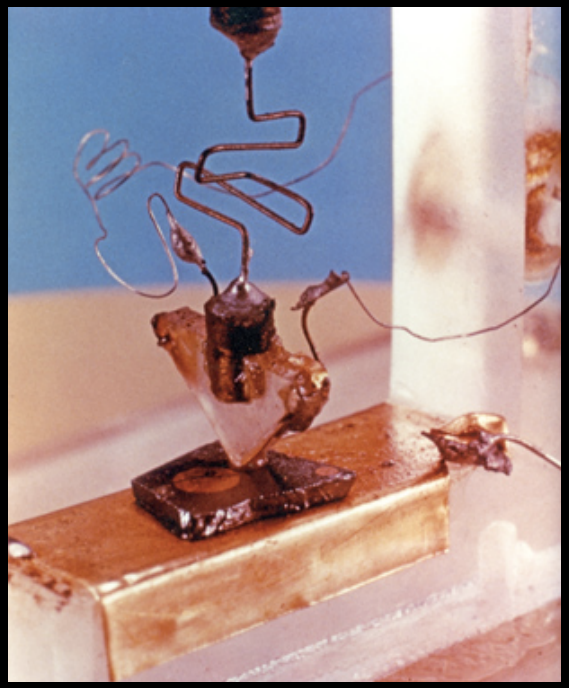

First transistor
1948

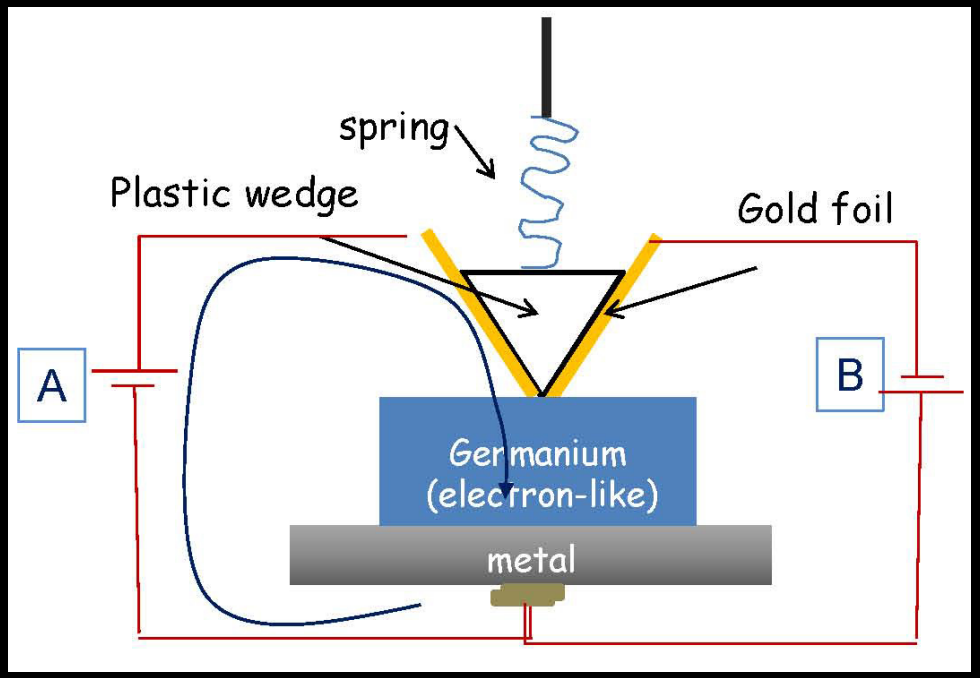

- 2 pieces of gold foil very close together, < 1/64" apart
- Spring pressed wedge into Germanium
- Depending on the bias voltage applied to B, compared to A, can AMPLIFY THE INCOMMING SIGNAL

Semiconductors: changeable charge behavior

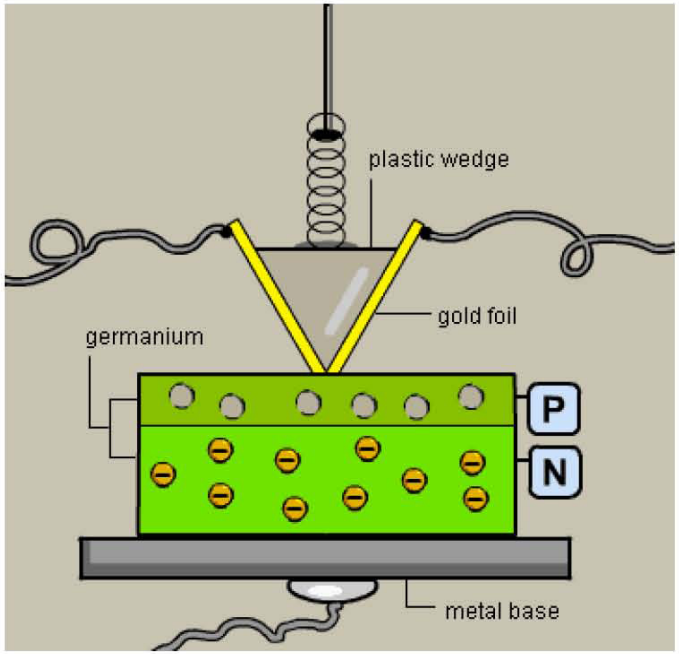

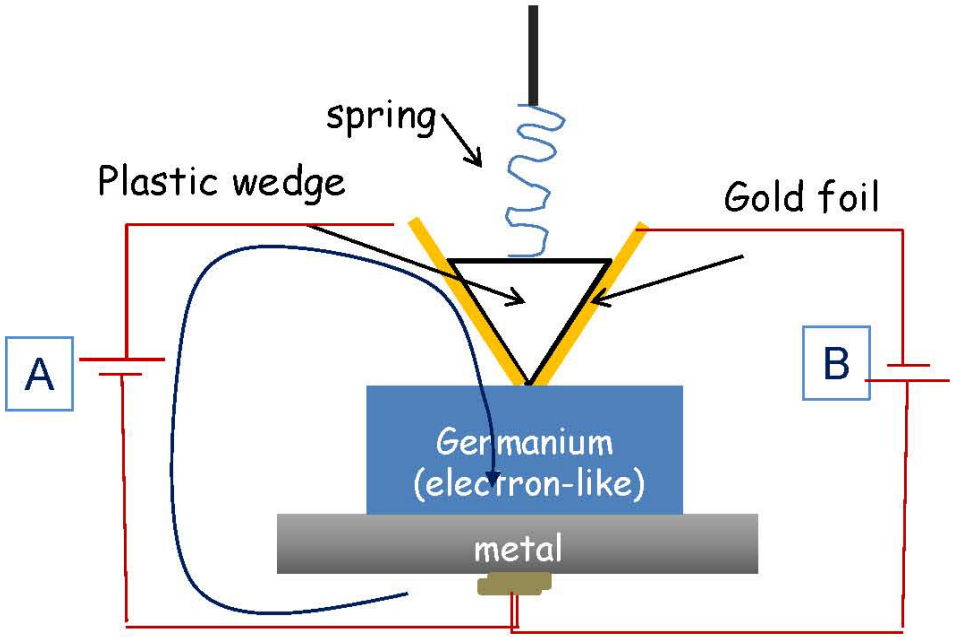

- Most of the GERMANIUM (Ge) behaves as an ELECTRON-conductor (negative charge, n-type)
- When a wire is connected to the surface, Ge behaves as if the surface is NOT n-type, but has carriers of the opposite charge (positive, p-type)
- AMPLIFICATION very dependent on the surface of the Ge (several hundred times increase in current)

The ‘ideal’ device material

…ideally, integrated into a single material

- Can be almost as conductive as a METAL or can be INSULATING

- Can behave as a conductor of both negatively-charged particles (electrons) AND positively-charged particles (holes)

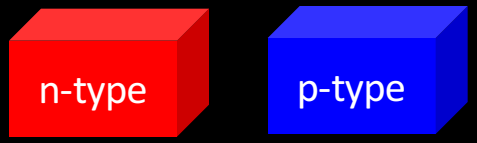

In photonic devices, can efficiently convert energy in photons into electrical energy (or vice versa)

- [Manufacturable, scalable to high density….]

SEMICONDUCTORS HAVE THOSE ‘IDEAL’ PROPERTIES AS A CONSEQUENCE OF WHERE THEIR ELECTRONS ‘LIVE’

instead of assembling each device, component by component ….

Print billions of transistors in parallel, on a large silicon page (wafer)

Jack Kilby
2000 Nobel Prize Winner,
Inventor of Integrated Circuit

More design possibilities: bringing p-type and n-type materials together

The result is a different 'landscape' for electrons and holes

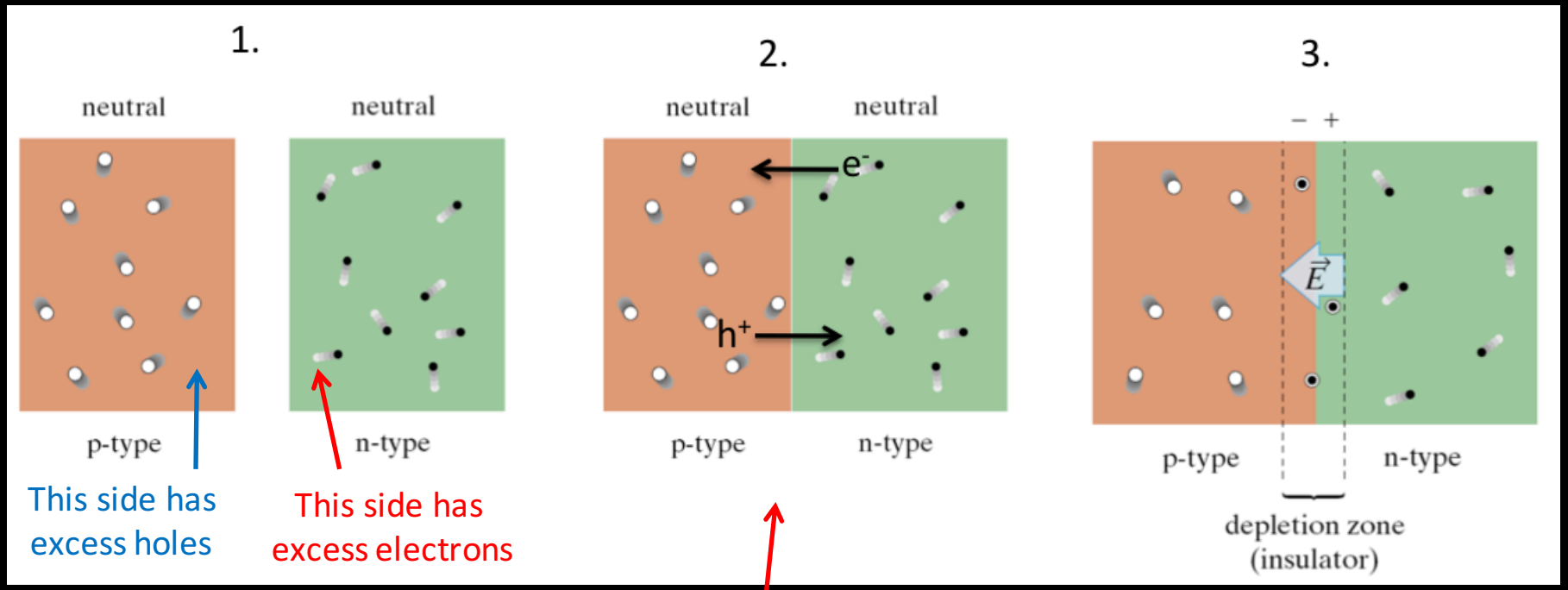

When we bring the material together,
the electrons and holes will try to compensate for this imbalance: why and how?

More design possibilities: bringing p-type and n-type materials together

THE 'LANDSCAPE' FOR ELECTRONS LOOKS LIKE:

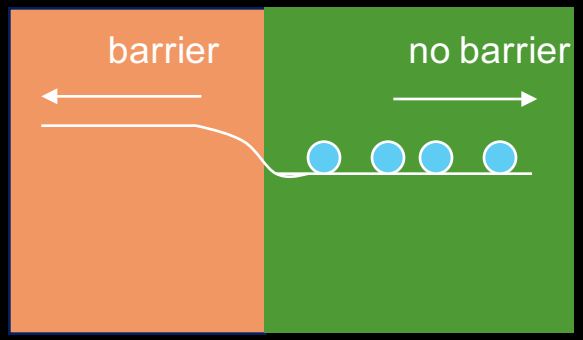

But you can <u>change</u> the landscape by applying a voltage between p-type and n-type silicon:

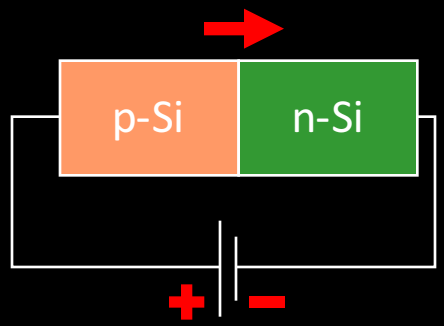

'FORWARD BIAS'

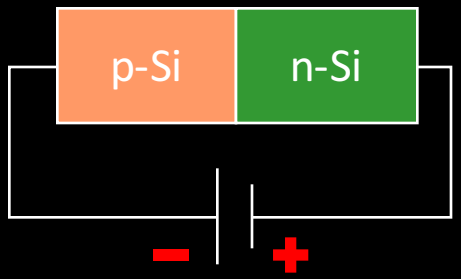

'REVERSE BIAS'

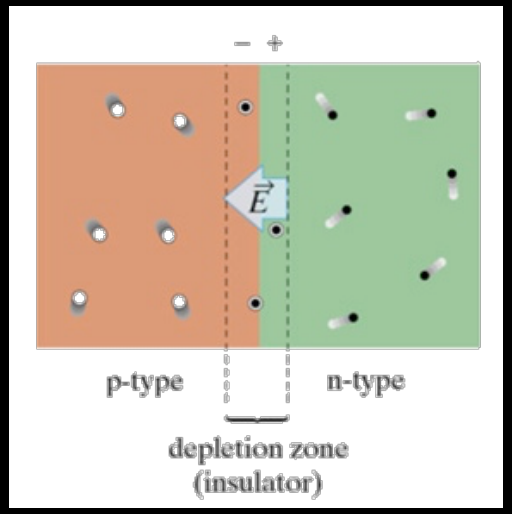

REDUCE

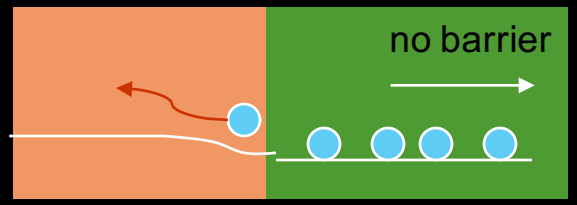

Current begins to flow

INCREASE

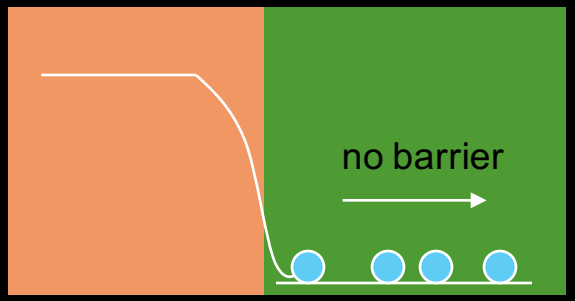

No current

The p-n junction: an important building block

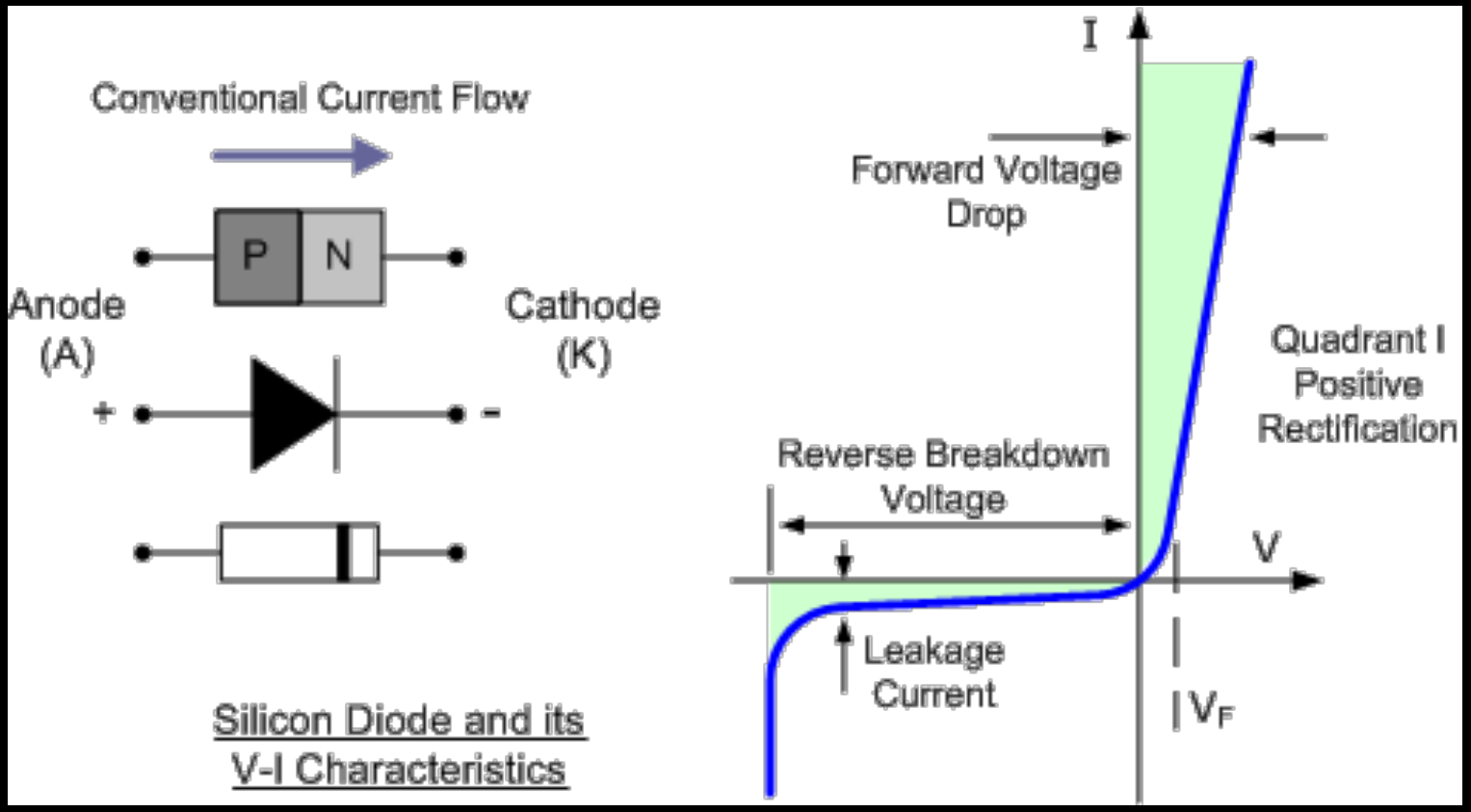

Sends current in one direction only (rectifies)

The p-n junction: an important building block

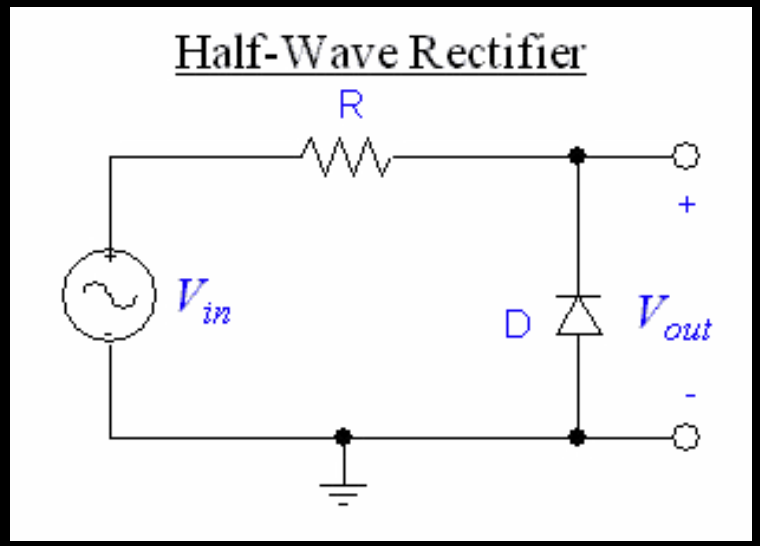

Sends current in one direction only (rectifies)

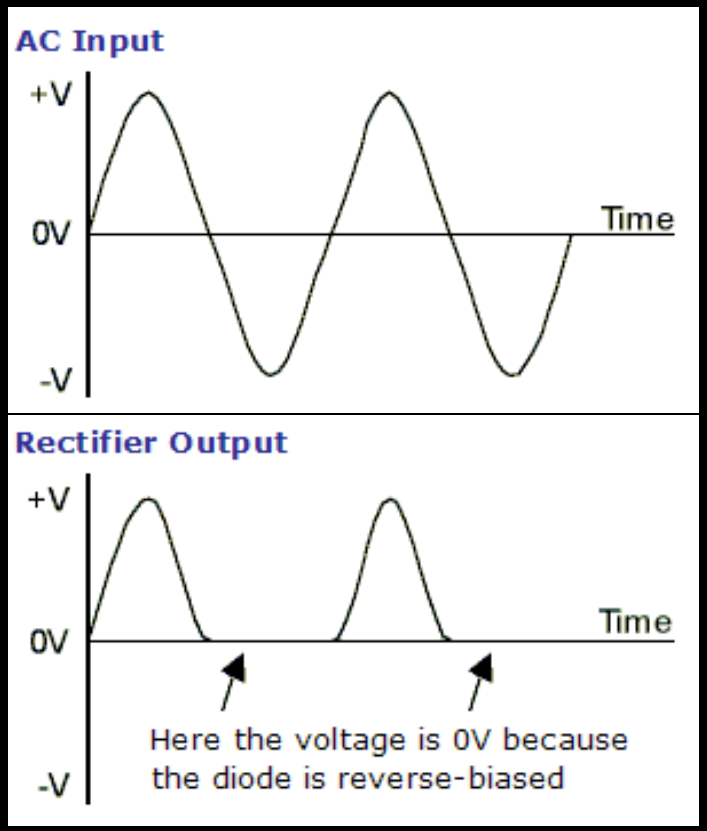

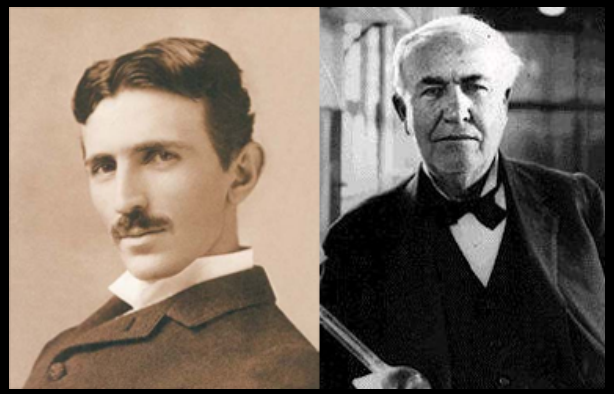

The battle between Nikola Tesla and Thomas Edison

Simple PN Light Emitting Diode

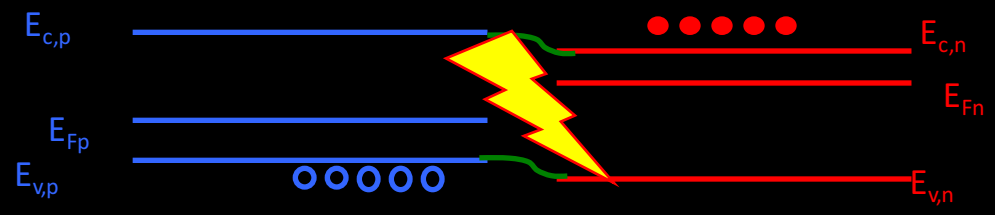

Forward Bias

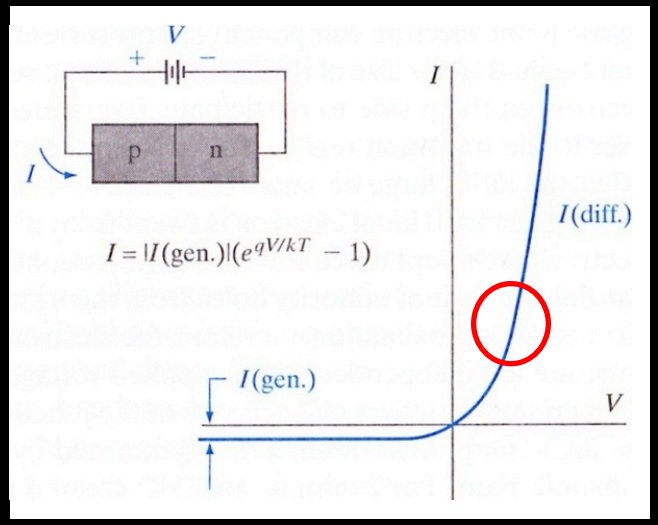

Operation

- Majority carriers collect at energetic barrier
- Electron and hole radiatively recombine
- Some carriers diffuse across the barrier and do not produce light
- Carriers spread out over ~ ± L_D beyond junction with carrier decreasing density
- Recombination Rate ~ np

How can we increase radiative recombination?

Heterojunctions

PN Homojunction

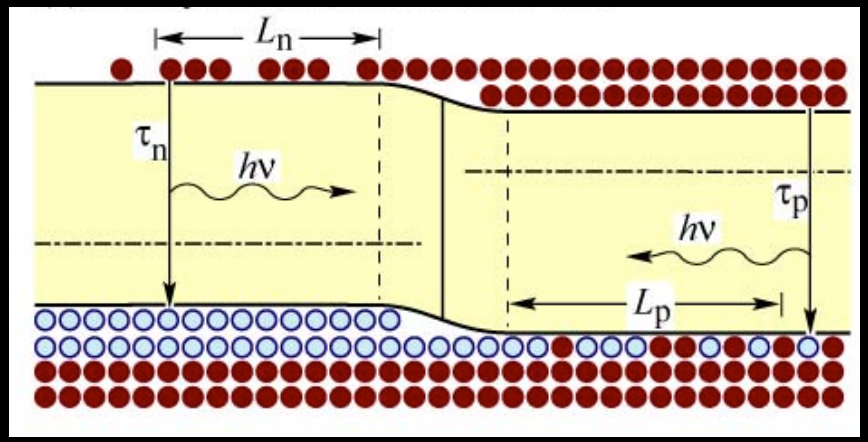

Carriers spread out over ~ ± L_D beyond junction with decreasing density

What could we do to make this better?

- What properties would enable this?
- Band structure?

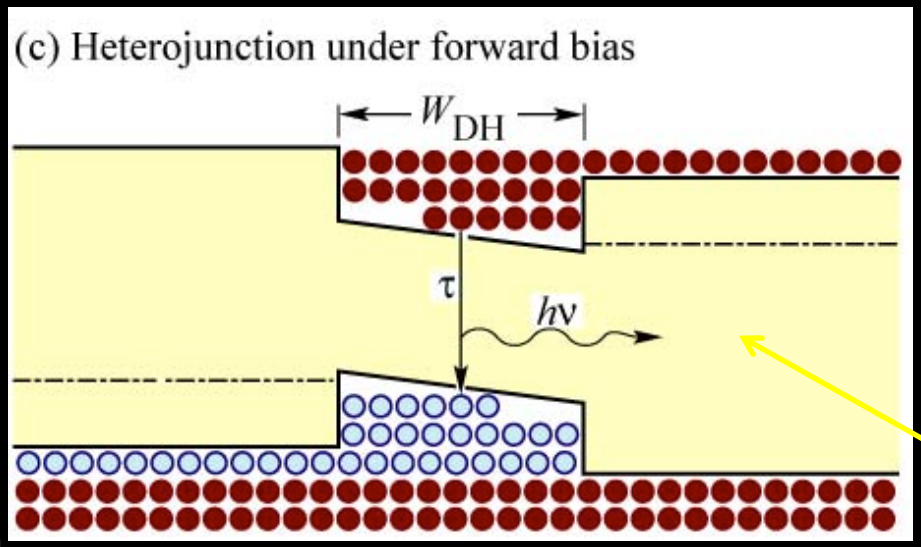

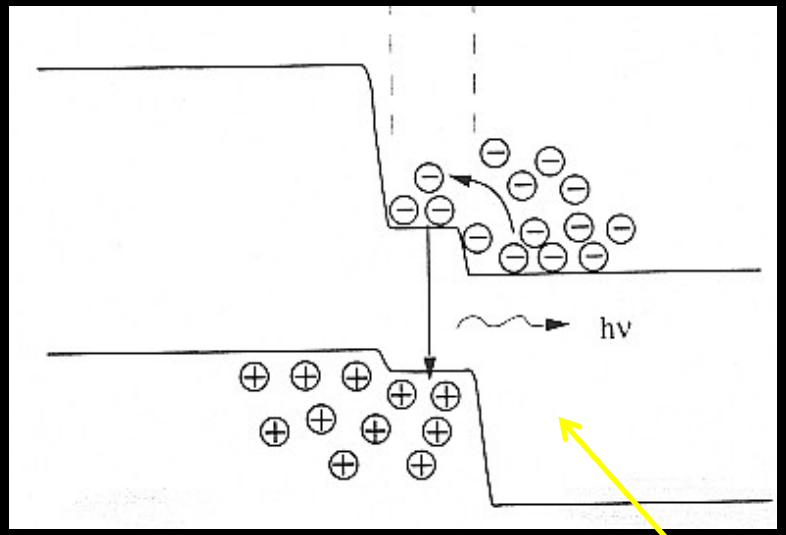

Carriers confined to $W << L_D$, local concentrations increase for same current, $R_{rad} \sim np$

PN Photodiode Operation

Steady State

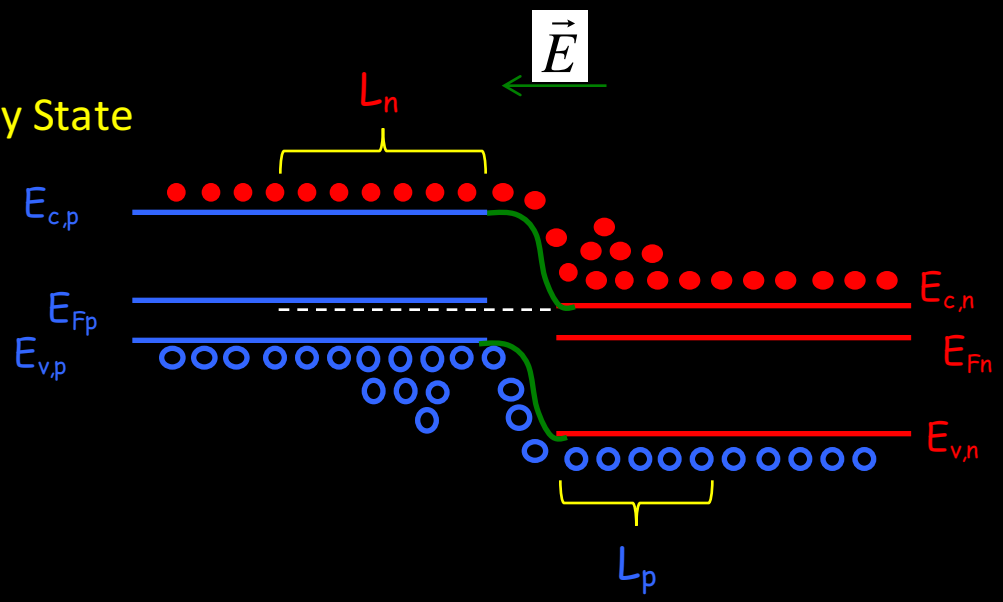

Reverse Bias (or zero bias)

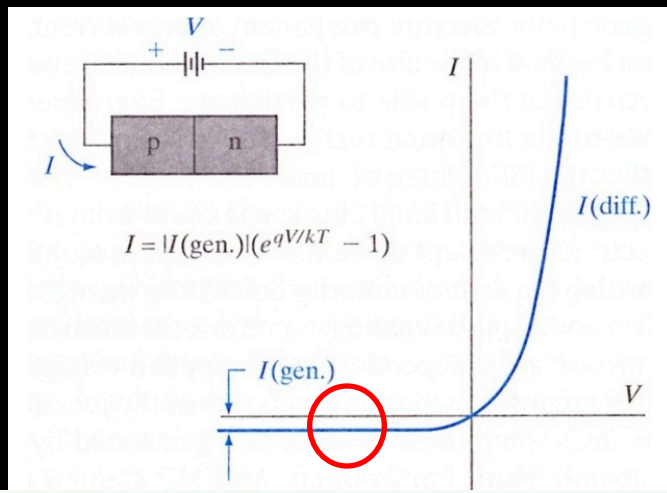

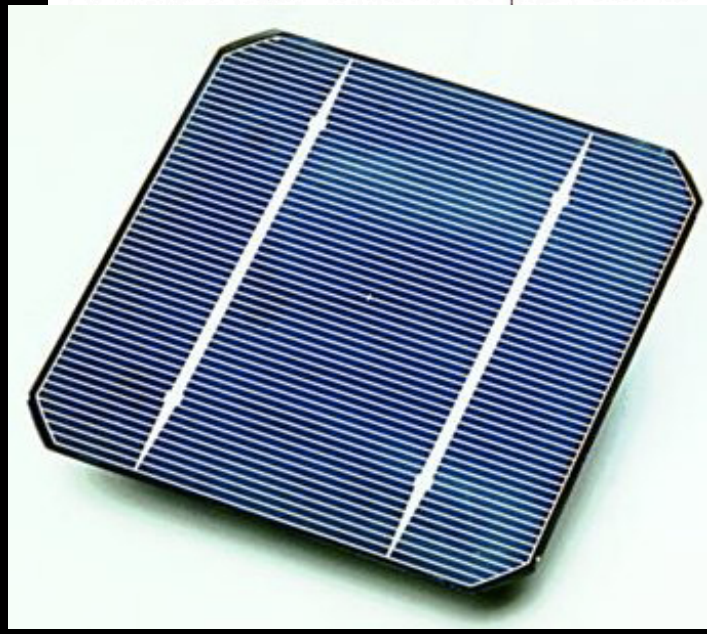

- Carriers are photogenerated everywhere
- Field acts on the carriers in the Space Charge Region (Depletion Region)
- Majority carriers diffuse towards contacts
- Minority carriers diffuse toward SCR, only within 1 diffusion length
- Other minority carriers are lost outside of 1 diffusion length (recombine)

Photodetectors ≈ solar cells!!!

The diverse world of switch possibilities
BJT: Bipolar Junction Transistor

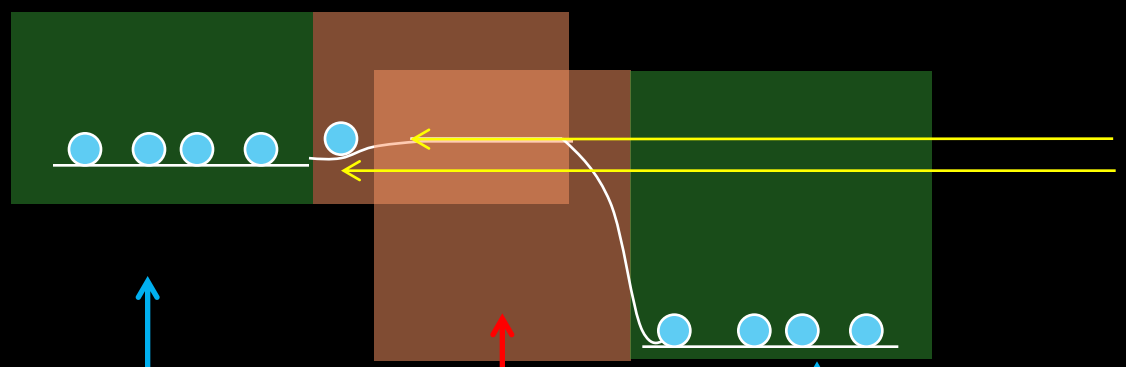

EMITTER
(source of electrons)

BASE

COLLECTOR

A subtle change in the height of this 'barrier' can result in a large change in the total current through the device.

THIS IS GAIN!

Remember, the direction of electron flow is *opposite* to the direction of current flow

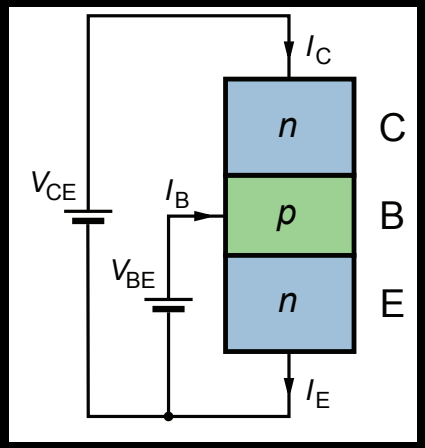

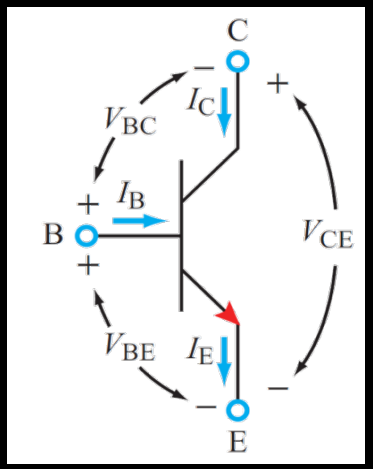

Once V_{CE} is turned on "enough", I_B sets the output current!

- Its like a current source

Another way of controlling current..

By using a voltage (or field) to control the current

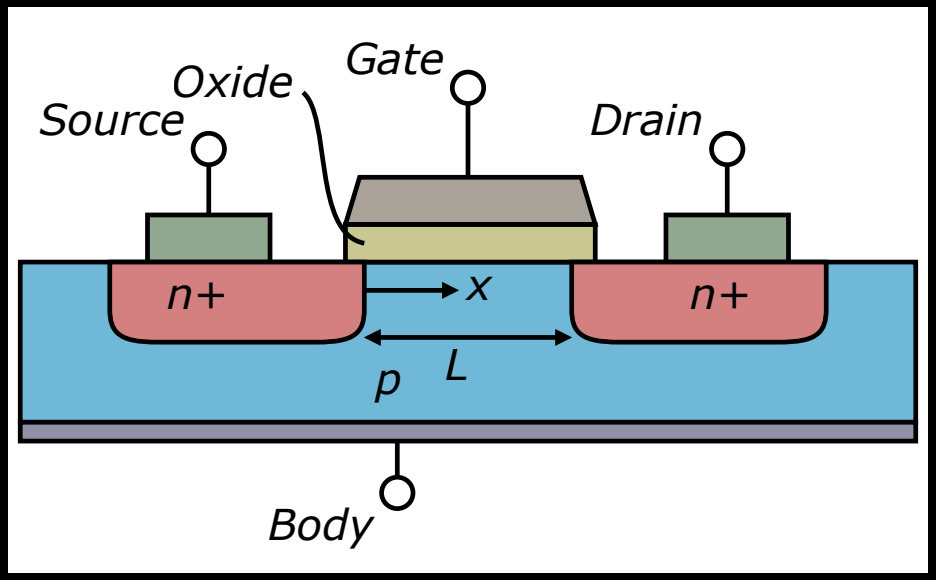

Metal-Oxide-Semiconductor (MOS)-Field Effect Transistor (FET)

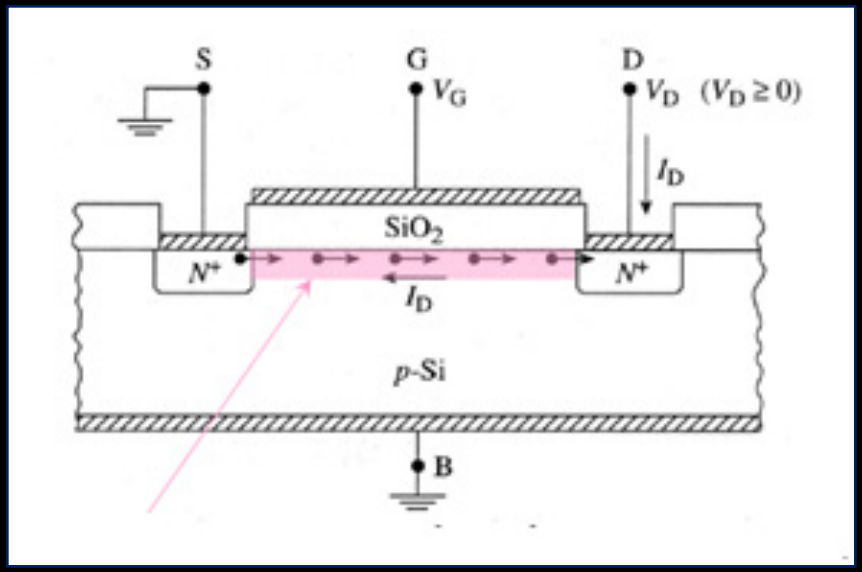

The gate controls the current between a SOURCE and DRAIN.

1. We can make a device with N-channel or P-channel
2. We can make a device that's 'normally on' or 'normally off'...then
3. Control that device by ENHANCING or DEPLETING the current in the channel

MOSFET: Characteristics

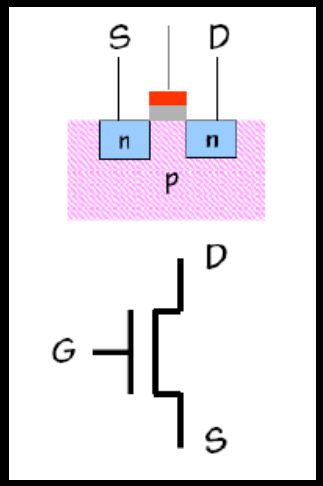

N-channel, enhancement

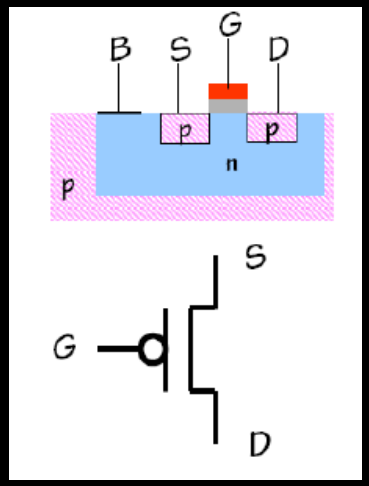

P-channel, enhancement

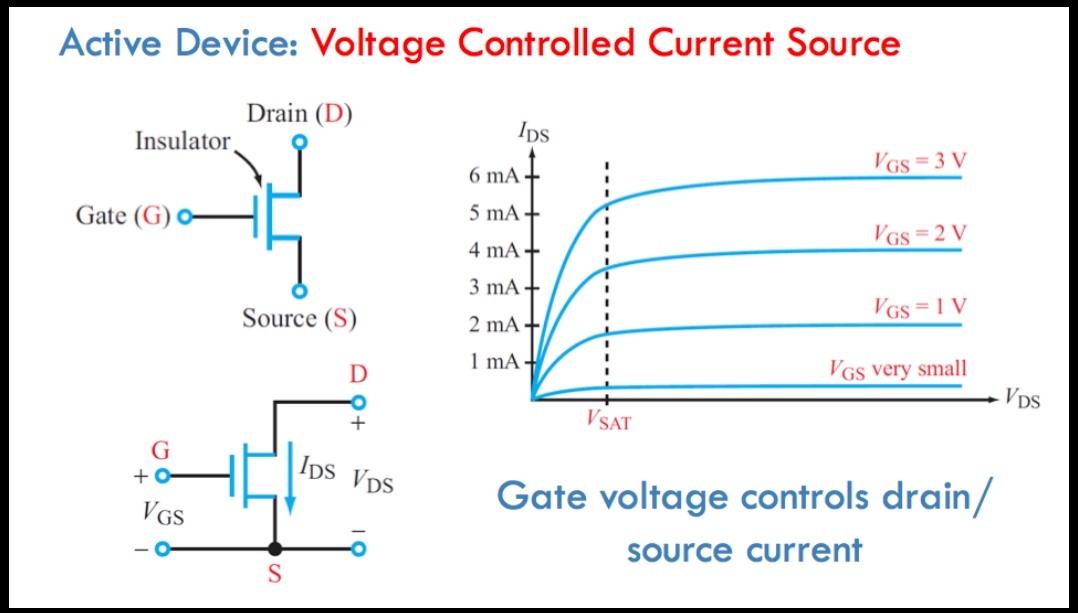

So how do we make these devices?

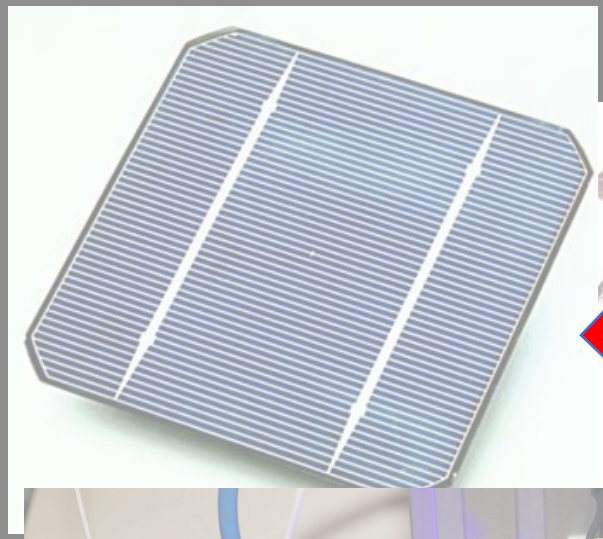

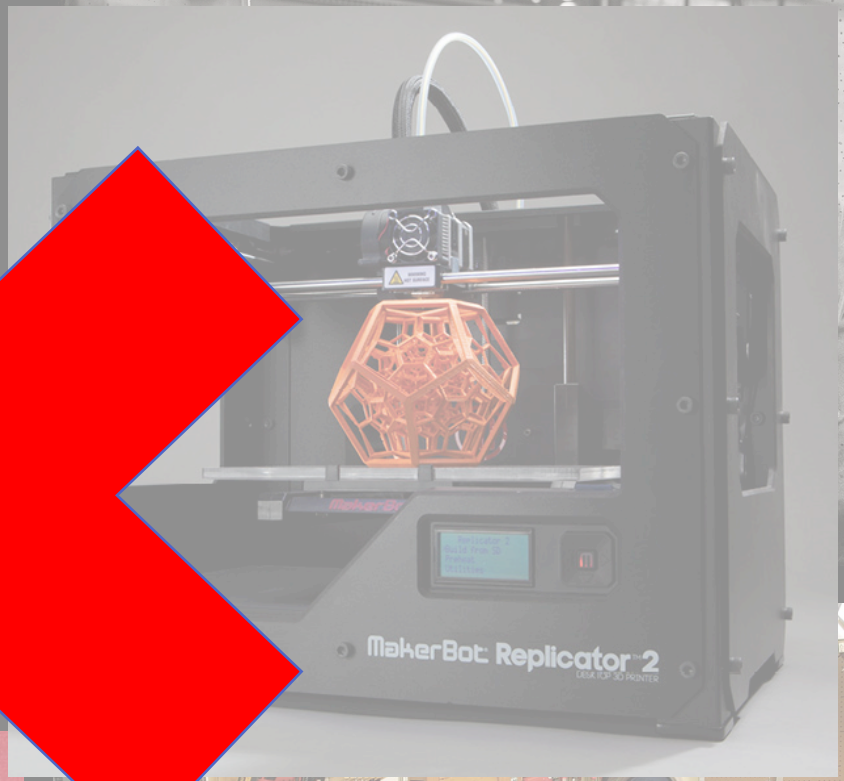

Let's take a look at what led to semiconductor manufacturing as we know it today!!!

The seed of an idea, the potential for scalability

Switches made in semiconductor

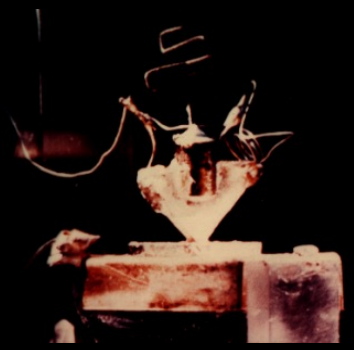

First transistor
1948

'Printing' electronic functions onto a semiconductor page

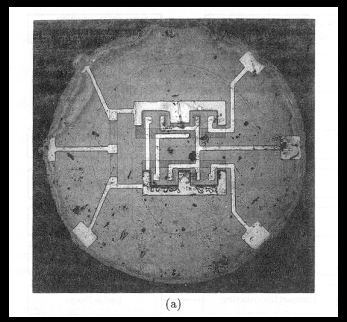

First Integrated Circuit
1959

…the ultimate in circuit miniaturization is attained using only one material for all circuit elements ….

Kilby patent application

Imagine that the one material is the 'paper' – and the dopants, metals, insulators are different kinds of colored inks…

A Prize-winning Idea (of the Nobel kind)

First Integrated Circuit (1959)

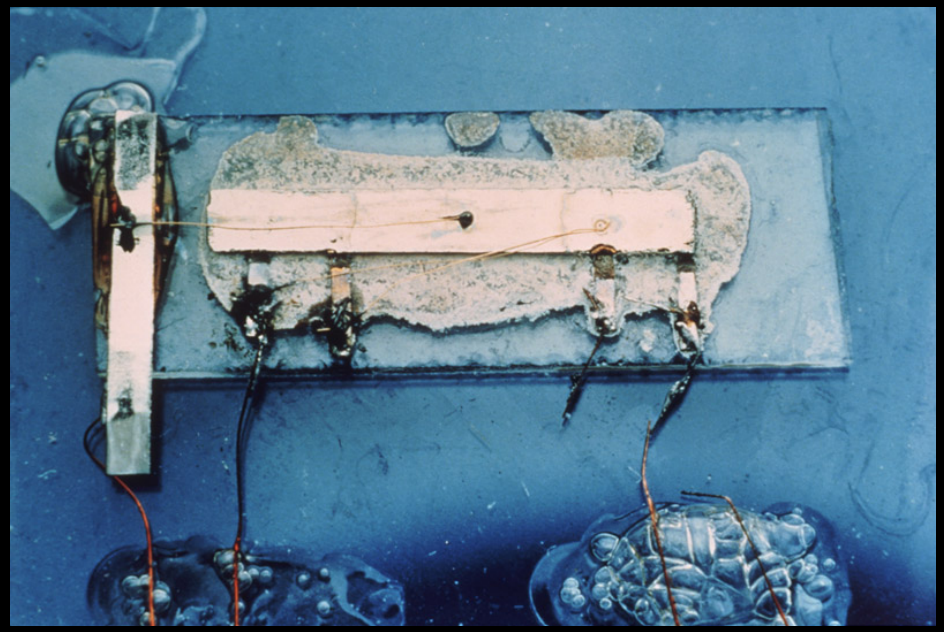

Jack Kilby (2000)

The transforming idea: <u>all</u> the electronic functions of a circuit can be achieved using silicon or silicon-related materials as the basis

A ‘VIRTUOUS’ CYCLE?

Why are transistors so prevalent?

- They’re cheap!

Why are transistors cheap?

- Scalable manufacturing
- More devices per amount of material
- More devices per initial investment
  - DEVICES MUST BE MUCH SMALLER IN SIZE!

SMALL IS BEAUTIFUL, FUNCTIONAL, ECONOMICALLY IMPORTANT

(MOORE’S LAW)

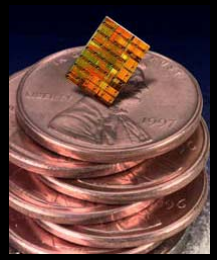

Exponential progress…

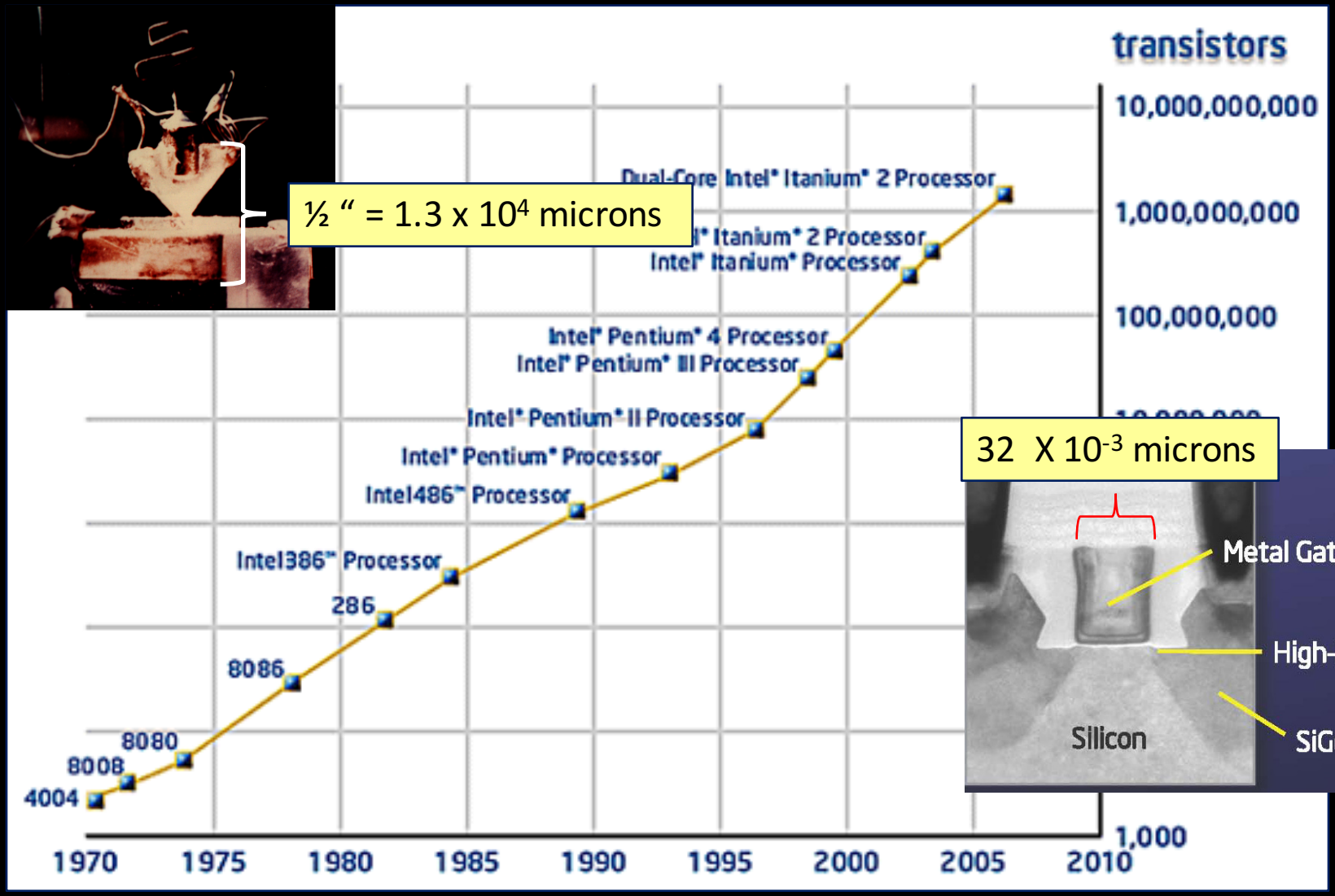

http://declineofscarcity.com/?p=1627

Cheaper and More Accessible Technology

THEN (1946)

ENIAC:Electronic Numerical Integrator And Computer

- Roughly 8.5 x 3 x 80 feet, took up 680 square feet and consumed 150 kW
- Division took 28 milliseconds!

First ge
computer, using vacuum tubes

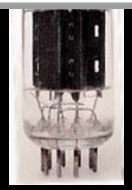

A ‘Paradigm Shift’: Gutenberg’s Printing Press Reappears

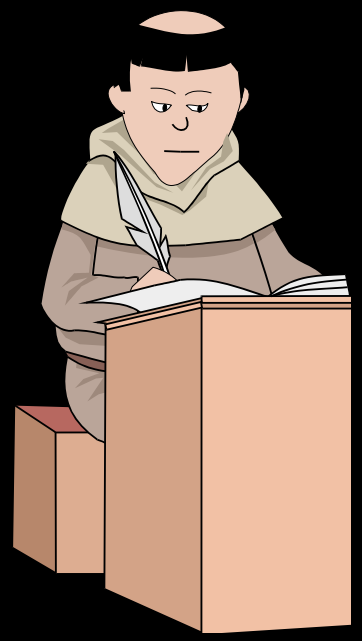

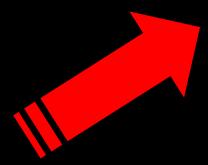

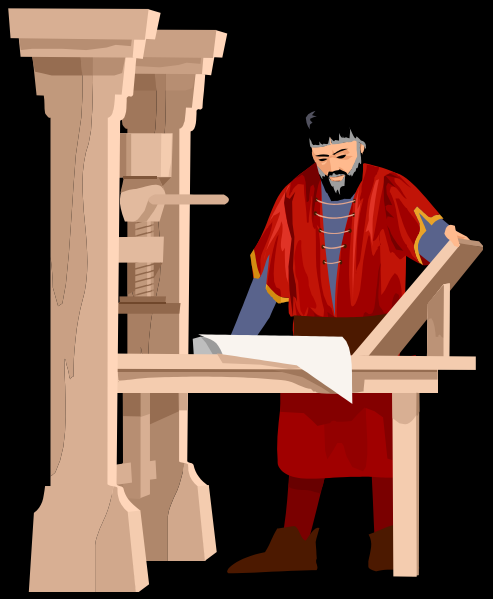

The invention of the printing press made books more easily and cheaply available. The widespread availability of written information transformed society.

How do you ‘write’ a transistor?

Precision Fabrication at the Nanoscale

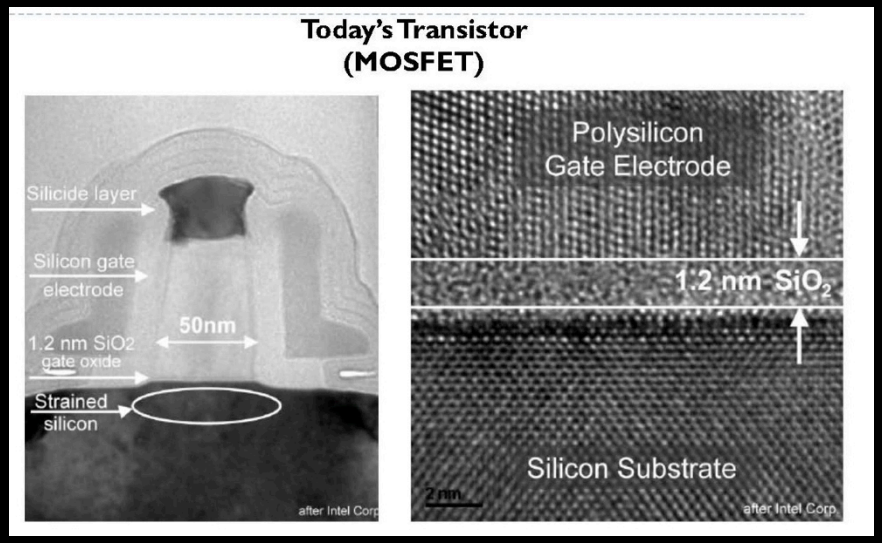

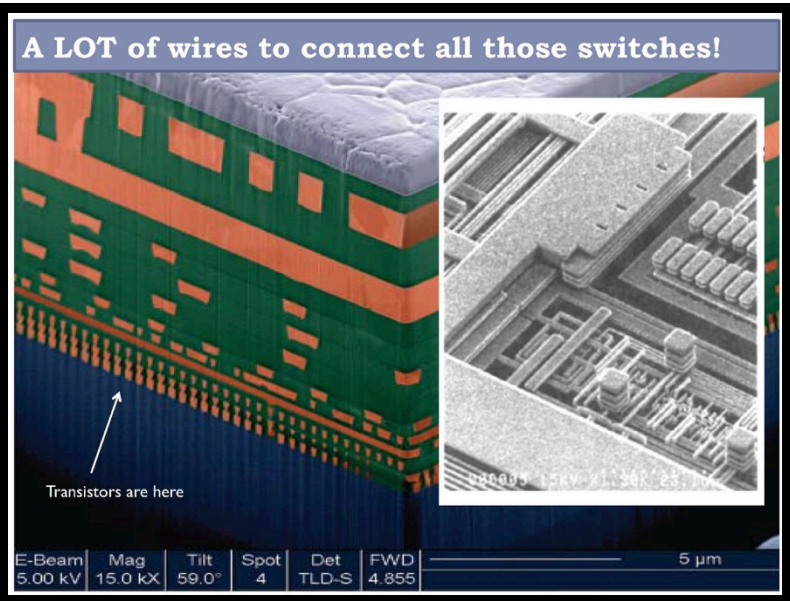

Miles of wiring, complex interconnections

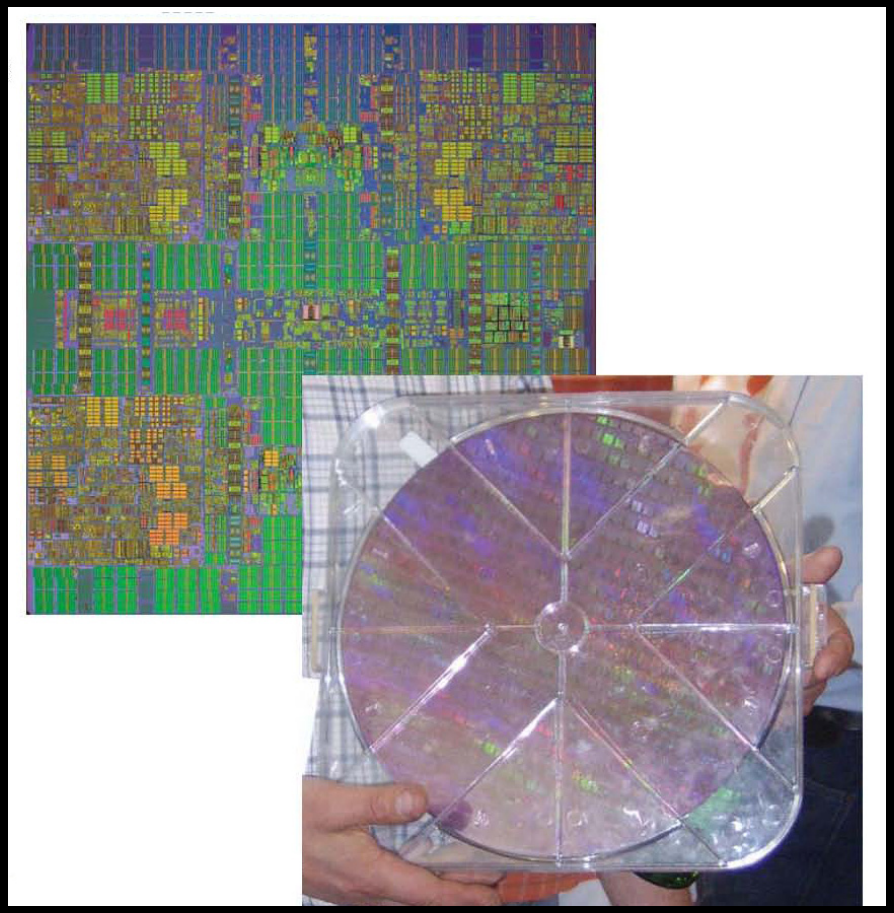

Complexity of Circuits
(> 2 billion transistors)

Intel: The Making of a Chip with 22nm/3D Transistor: http://youtu.be/d9SWNLZvA8g
Konarka Power Plastic: http://youtu.be/3UzSUmU8zdc

Putting it in Scale

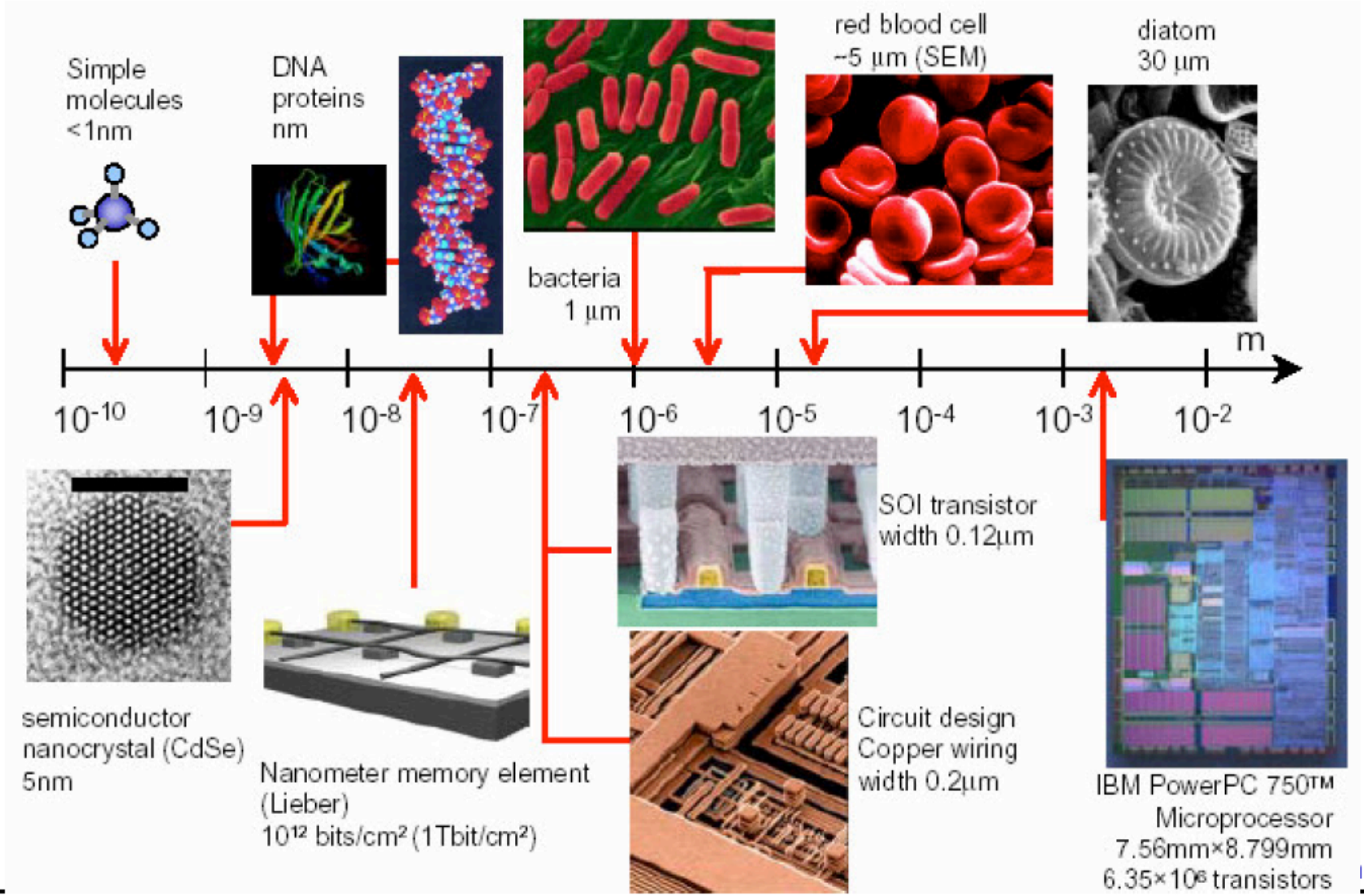

IBM's Fishkill Fabrication Line

Called 'Clean Rooms'? Why?

Center for Nanoscale Systems at Harvard
Cleanroom

Device Engineering

The heart of device engineering is about harnessing & manipulating material properties

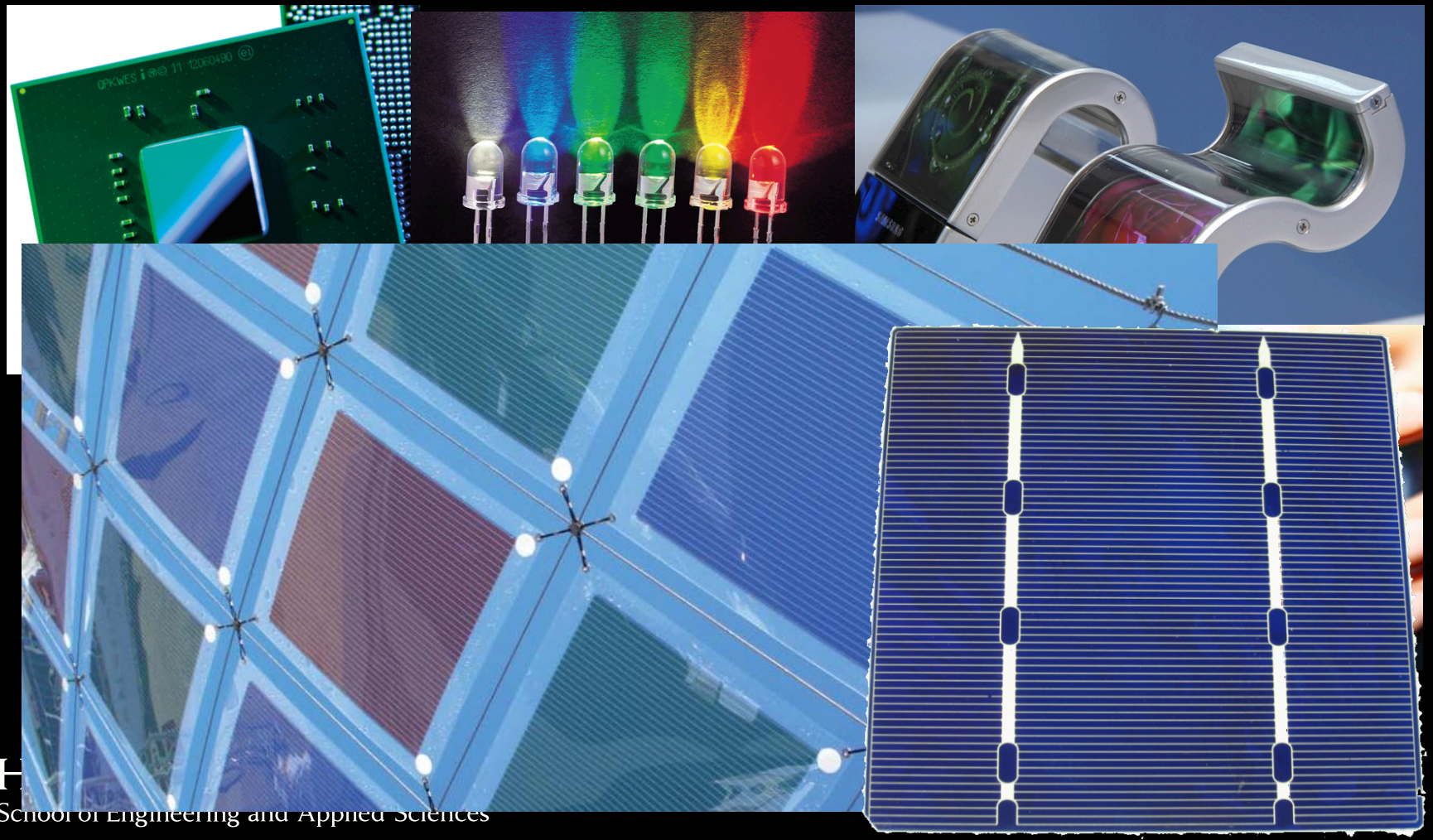

Next Time
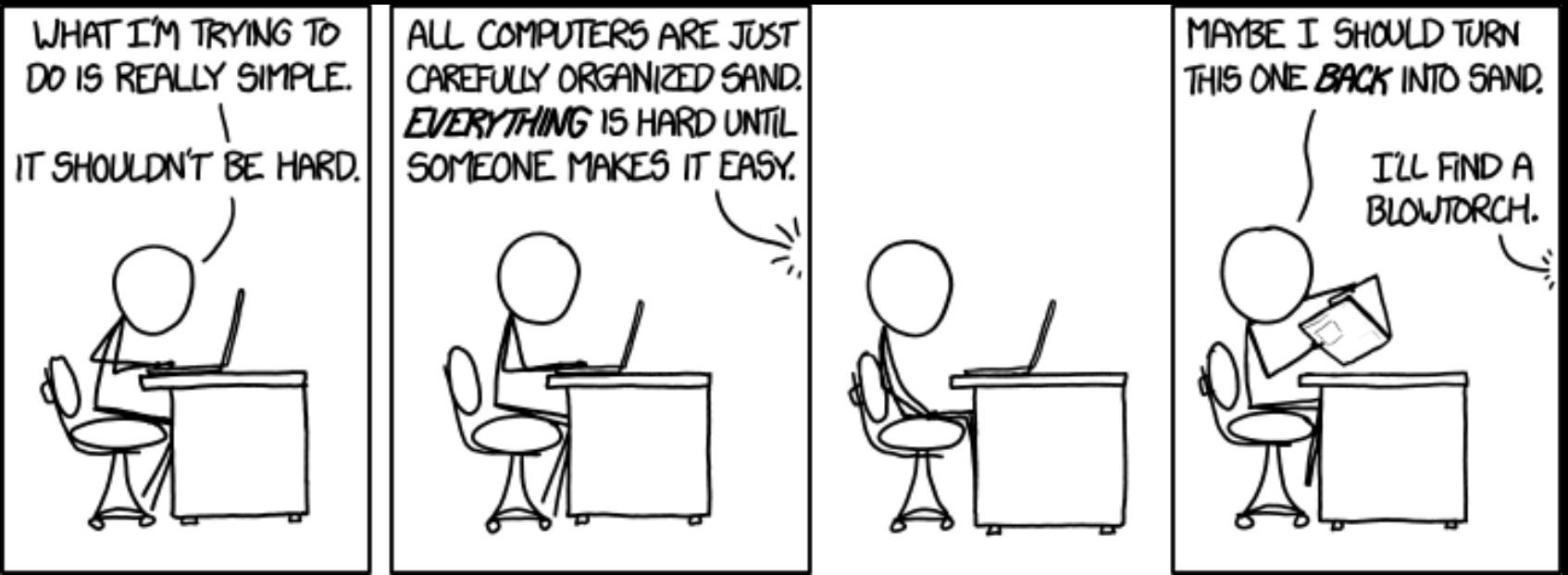
- Analog & Digital Communications
- Wrap-Up