ES 50: Introduction to Electrical Eng.

Explore EE, satisfy a Gen Ed requirement & have fun

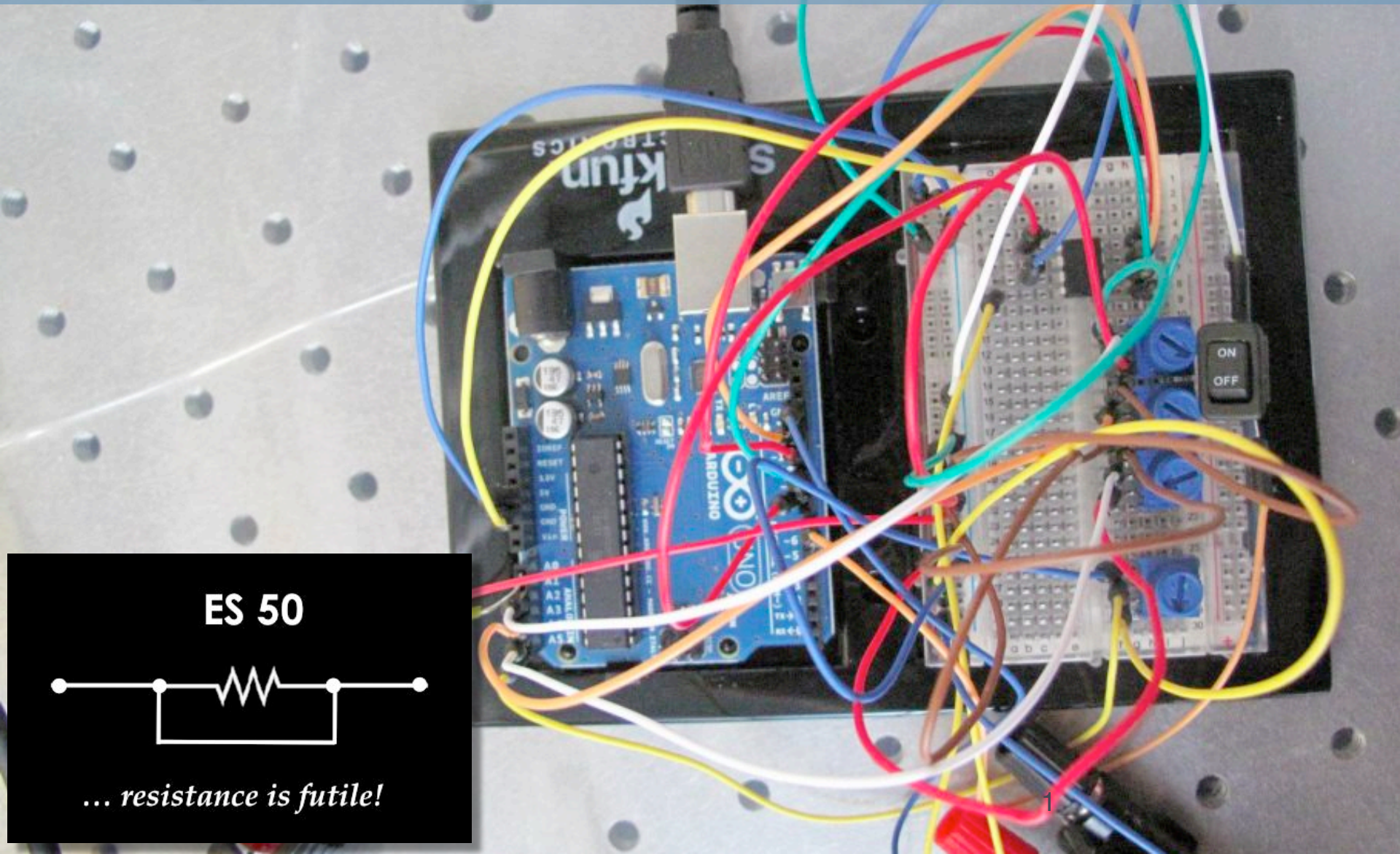

ES 50

… resistance is futile!

Lecture 7: Capacitors and inductors

ES 50: Introduction to Electrical Engineering

Announcements

- In-class Quiz #1 on Wed, Oct 7…
  - Everything up to and including inductors and capacitors
  - Allowed one 8.5x11 inch sheet of notes (front and back)
  - Calculators allowed, computers not allowed
- No pset due Oct 10 (week of quiz #1), but labs **will** continue
- Review sessions M/T evening 7-9:30PM in MD119 lobby area
- Extended OH for Gu: Tues, 10/6, 1-4PM in MD333

- Last time…
  - A more formal treatment of feedback
  - PID controllers

- Today…
  - Capacitors
  - Inductors
  - RC circuits

PID Controller

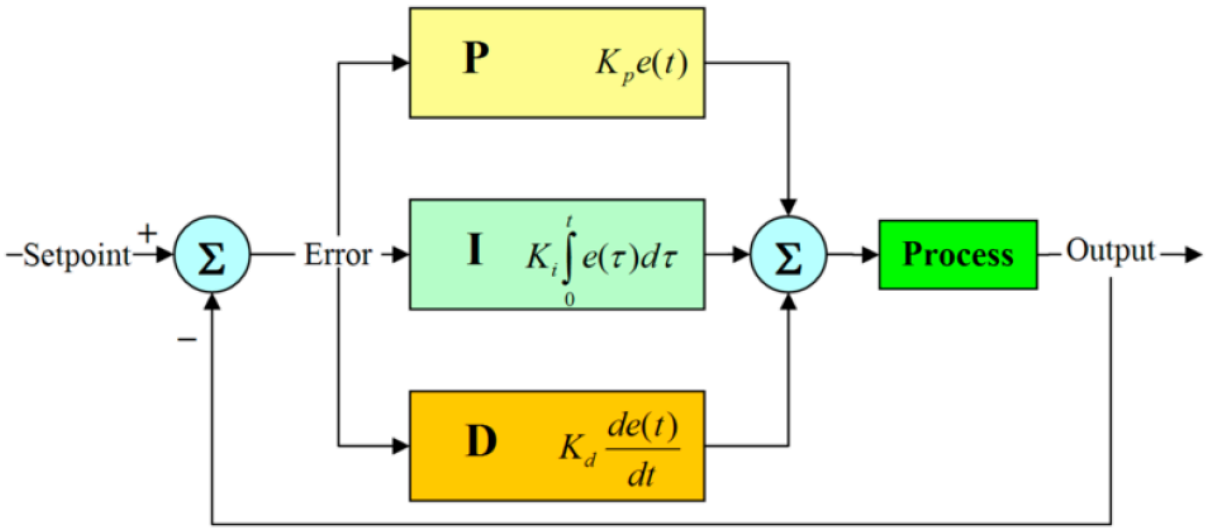

What is the influence of each of these parameters P, I, and D? Consider following example that shows change of car speed, as a function of time, in response to disturbance (e.g., going downhill) at t=2.

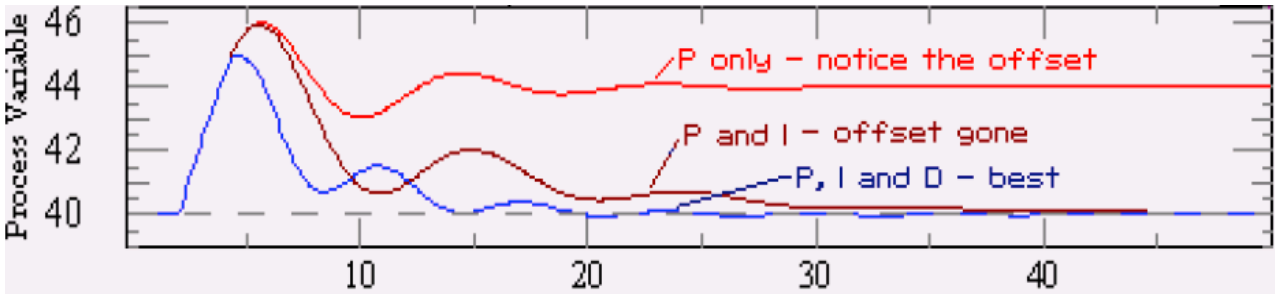

PID Controller

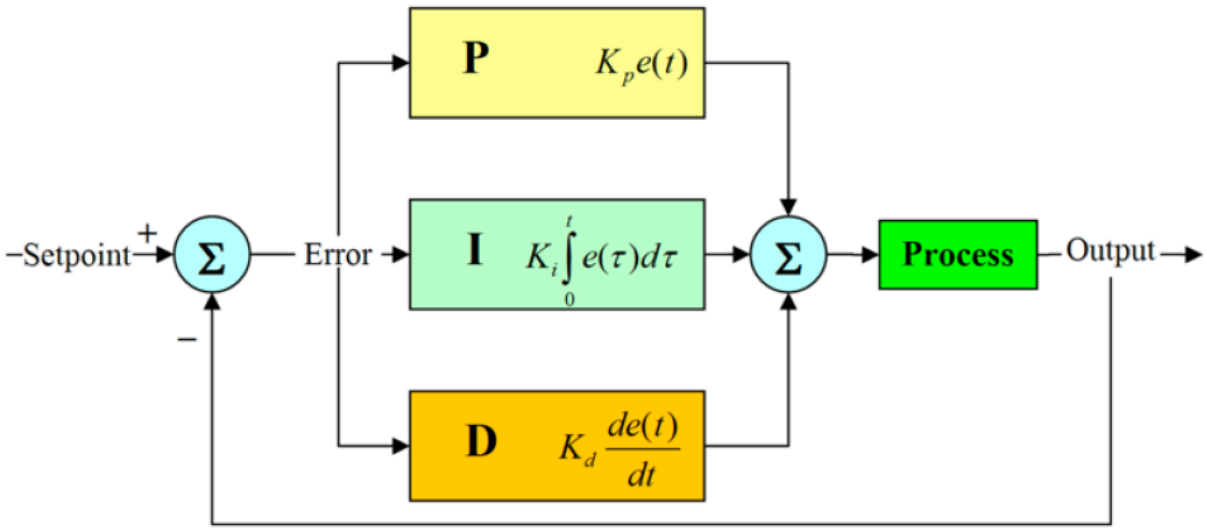

Effects of different PID parameters:

Parameter	Rise time	Overshoot	Settling Time	Steady State Error
P (K_P)	Decreases	Increases	Small effect	Decreases
I (K_I)	Decreases	Increases	Increase	Eliminates it
D (K_D)	Small effect	Decreases	Decrease	No effect

How do we make these integrators and differentiators?

PID Controller

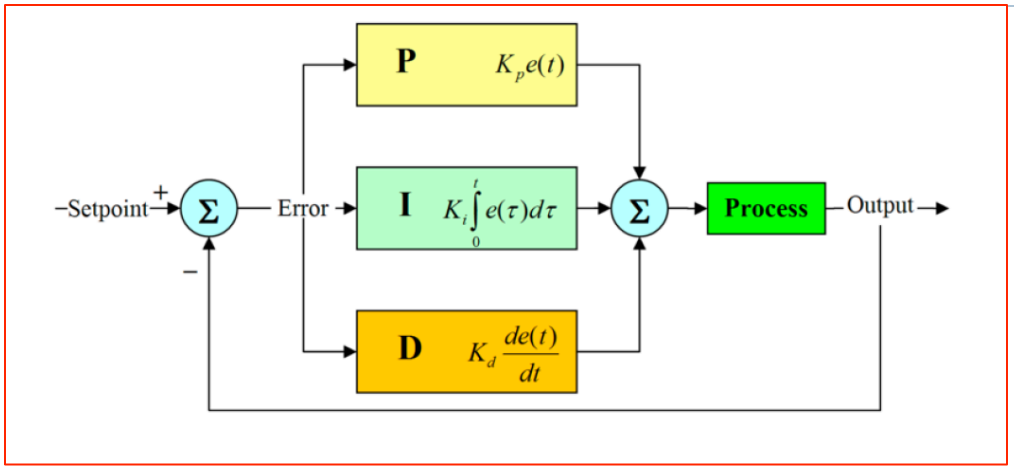

Proportional Term (Gain)

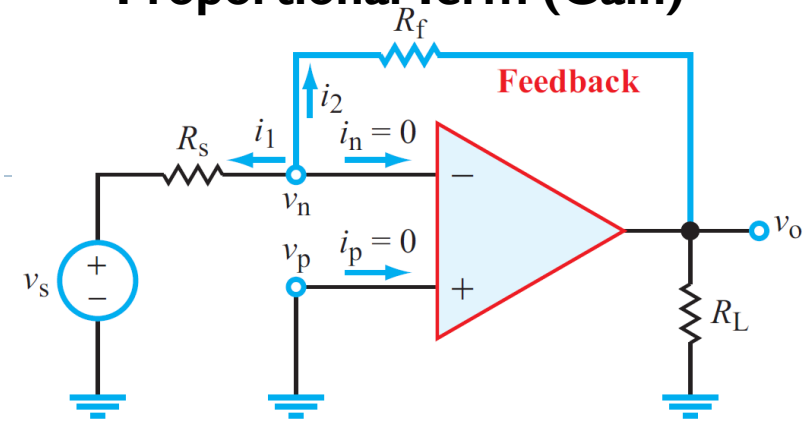

$$G = \frac{v_o}{v_s} = -\left(\frac{R_f}{R_s}\right).$$

Integral Term

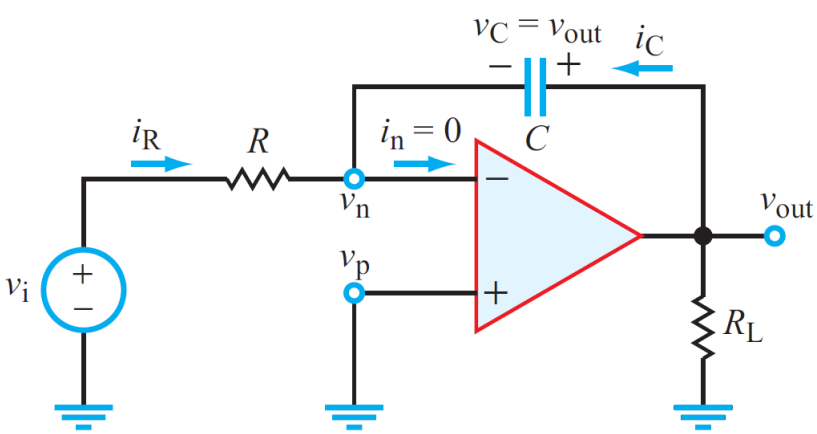

$$v_{out}(t) = -\frac{1}{RC}\int_{t_0}^{t} v_i\, dt + v_{out}(t_0).$$

Derivative Term

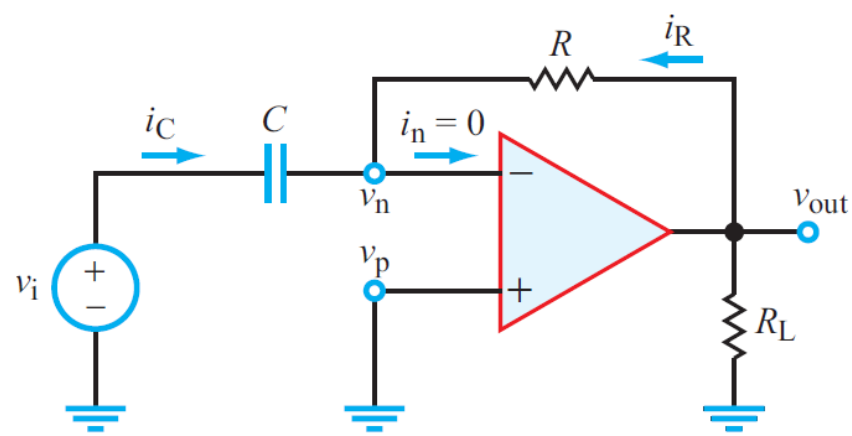

$$v_{out} = -RC\frac{dv_i}{dt},$$

Capacitors – devices that can store charge

Parallel plate capacitor

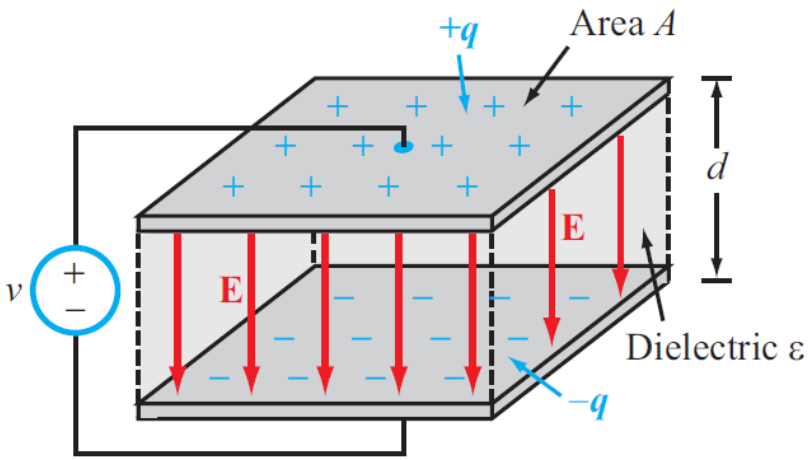

$$q = C \cdot v$$

$$v = \frac{q}{C}$$

C – capacitance of capacitor
q – charge stored on capacitor
v – voltage applied to capacitor

$$C = \varepsilon_0 \cdot \varepsilon_r \frac{A}{d}$$

$$\varepsilon_r = n^2, \qquad \varepsilon_0 \approx 8.85 \cdot 10^{-12} \left[\frac{F}{m}\right]$$

ε_0 – permittivity of vacuum; units F/m
ε_r – relative permitivity of dielectric material used in capacitor; unitless
n – refractive index; unitless

Energy Stored in Capacitor

- Instantaneous power in/out of a capacitor

$$p(t) = vi = vC\frac{dv}{dt}$$

  - If p(t) positive, power into capacitor
  - If p(t) negative, power out of capacitor

- Energy (*w*) stored in the capacitor is a product (or integration) of power and time

$$w = \int_{-\infty}^{t} p\ dt \quad = \boxed{\frac{1}{2}Cv^2}$$

Capacitor Applications

- Dynamic memory in your computers
  - Information stored as a charge on the capacitor
- Flash drives (USB drives)
  - Trapped charge on the isolated gate of transistor
- CMOS cameras (your webcam, basically)
- CCD cameras
  - Light signals are converted to charge and that charge is trapped in the capacitor. Coupling between capacitors is used to read out the charge (light intensity)
- Signal filtering (e.g. audio applications)
- Energy storage – super capacitors
- Motion actuation and detection in MEMS devices
- Control theory (e.g., PID controller)
- … and many many more!!!

1T1C DRAM

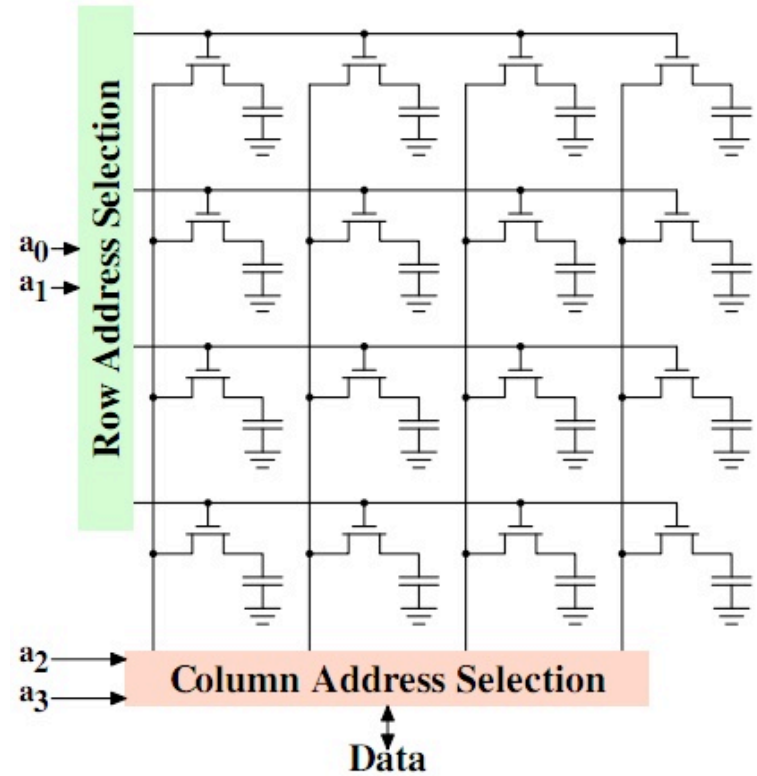

Various types of capacitors

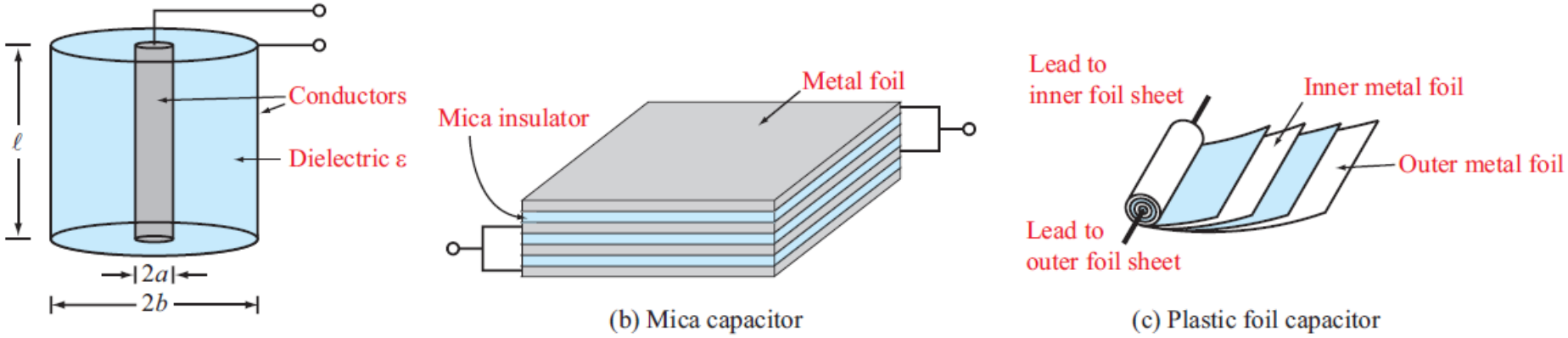

(a) Coaxial capacitor

(b) Mica capacitor

(c) Plastic foil capacitor

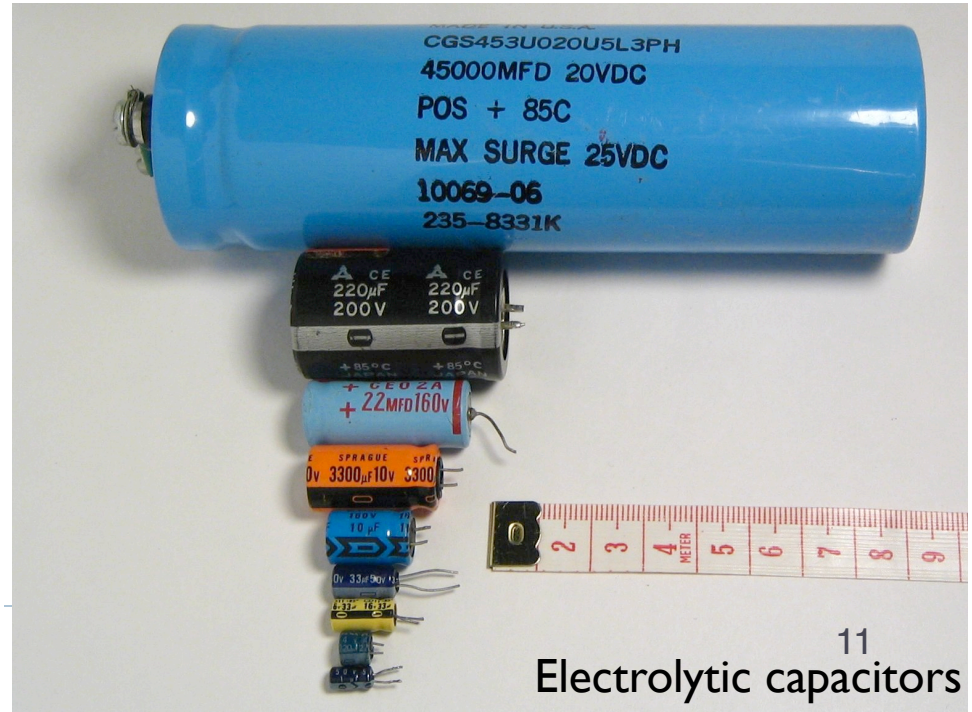

- dry-separator capacitors

Electrolytic capacitors

Super-Capacitors

- ***Supercapacitors - narrowing the gap between*** capacitors and batteries.
- Can have high energy densities, approaching 10% of battery storage densities
- Can absorb/release energy much faster than a chemical battery of identical volume!
  - Important during recharging (e.g. electric cars);
  - Can be charged and discharged millions of times before wearing out! Batteries can be recharged only a few hundred times before they are degraded.
  - **Much smaller** environmental footprint than conventional chemical batteries!

Energy stored in capacitor:

$$W=C*V^2/2,$$

where V is the voltage on the capacitor.

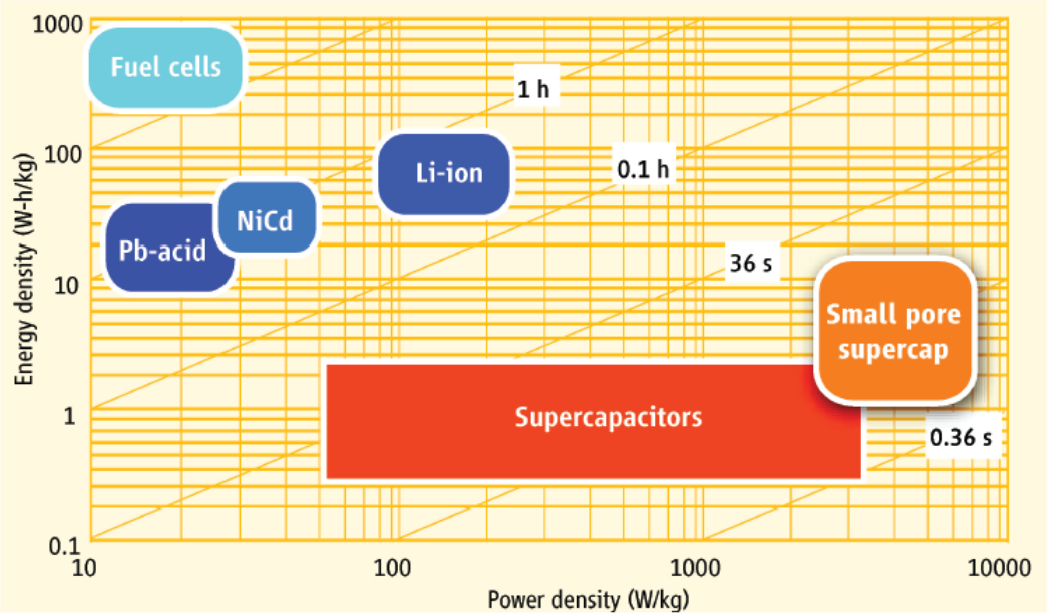

Capacitive touch screens

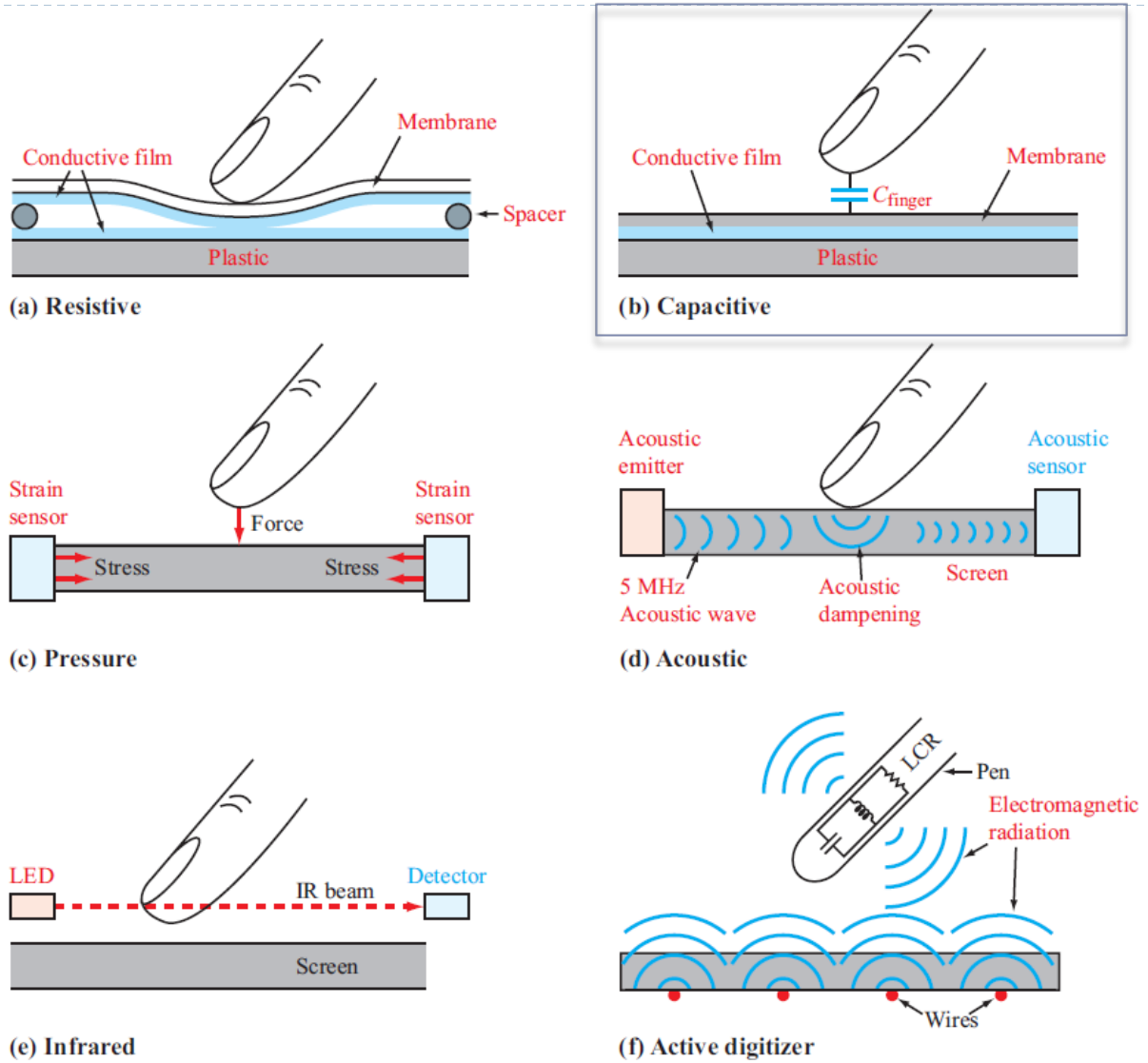

Figure TF13-1: Touchscreen technologies: (a) resistive, (b) capacitive, (c) pressure/strain sensor, (d) acoustic, (e) infrared, and (f) active digitizer.

Fingerprint Imager

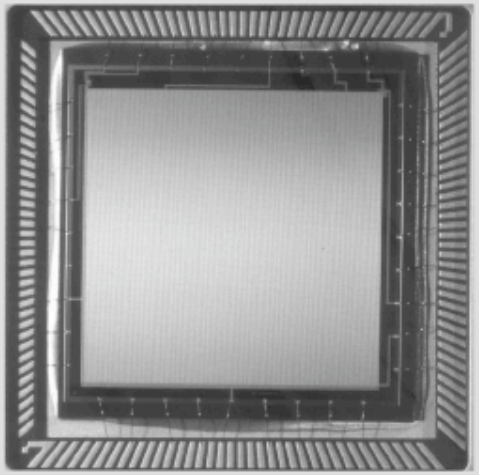

B1. 2-D capacitive sensor array

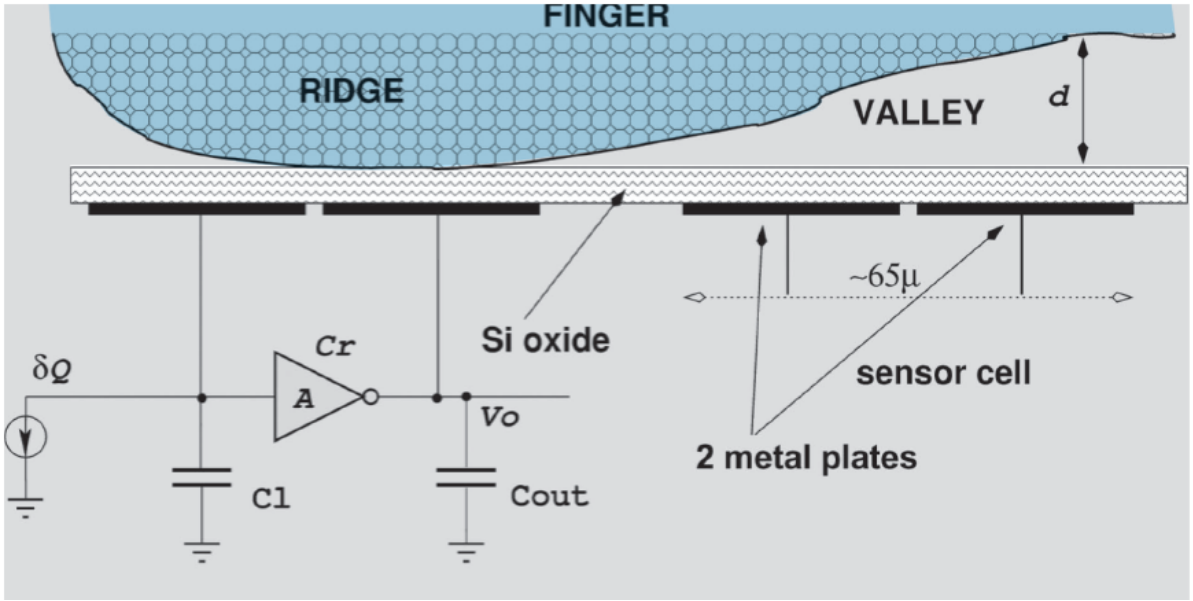

B2. Individual sensor cells

MEMS: Displacement Sensors & Accelerometers

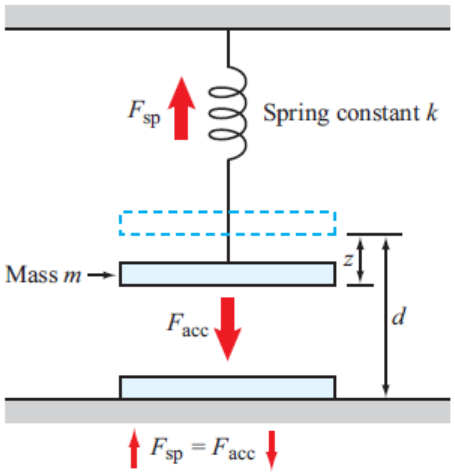

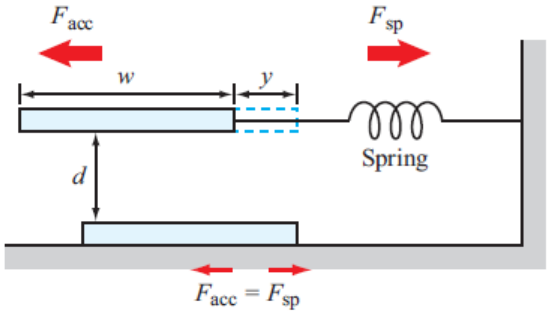

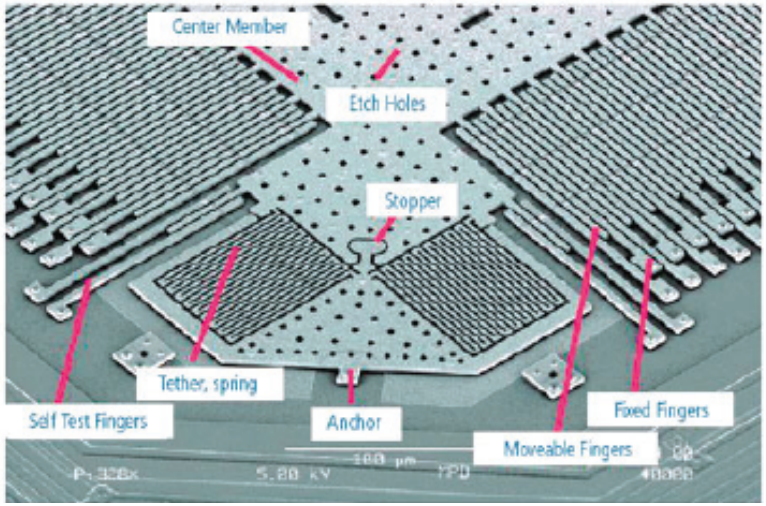

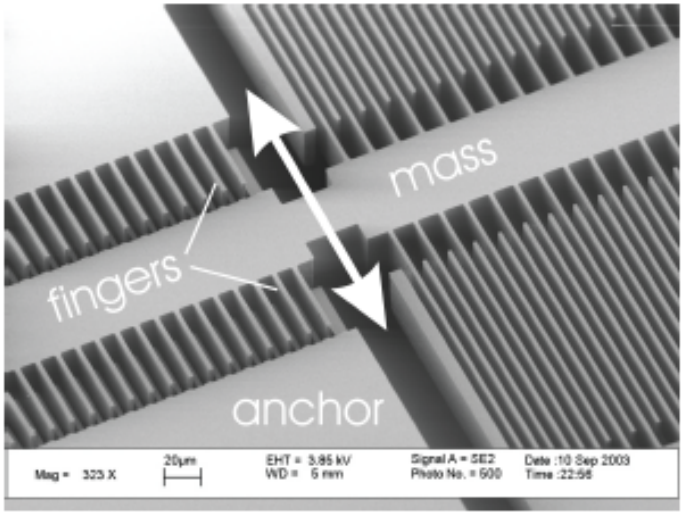

Relevant terminology

Source dependence

Natural response – response in absence of sources

Forced response – response due to external source

Complete response = Natural + Forced

Time dependence

Transient response – time-varying response (temporary)

Steady state response – time-independent or periodic (permanent)

Complete response = Transient + Steady State

Capacitor in a circuit…

Consider following simple RC circuit:

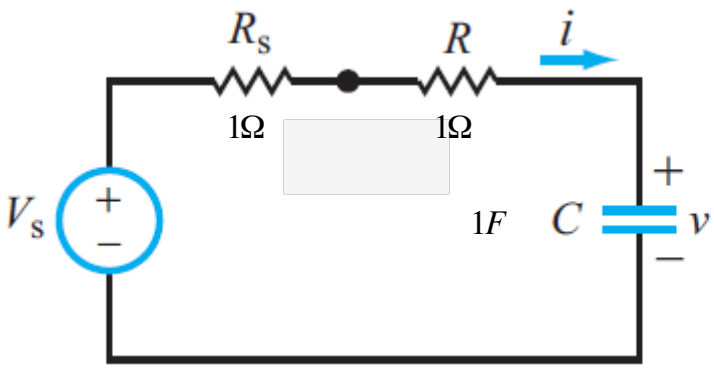

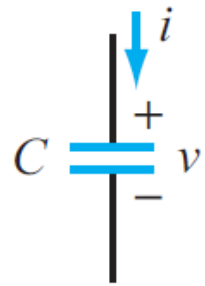

$$i(t) = \frac{dq}{dt}$$

$$q = C \cdot V(t)$$

$$\Rightarrow i(t) = C\frac{dV(t)}{dt}$$

$$\Rightarrow V(t) = \frac{1}{C}\int_{t_0}^{t} i(t)dt + V(t_0)$$

1. Let's assume first that $V_S(t)=const$, i.e., V_S is DC source
   a) **In steady state**, **once all transients are gone,** how big is *i(t)?*
   b) What does the capacitor look like in this case?
   c) How big is the voltage V(t) on the capacitor in steady state?
   d) But BE CAREFUL! What about this DC circuit? How big is the voltage on the capacitor now, if *i(t)=1A* ?
   Is there a steady state?

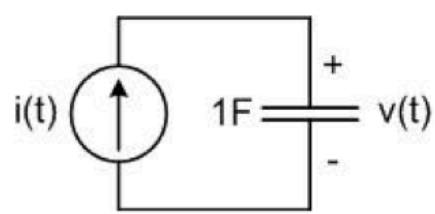

RC circuits at dc

- At dc no currents flow through capacitors: open circuit

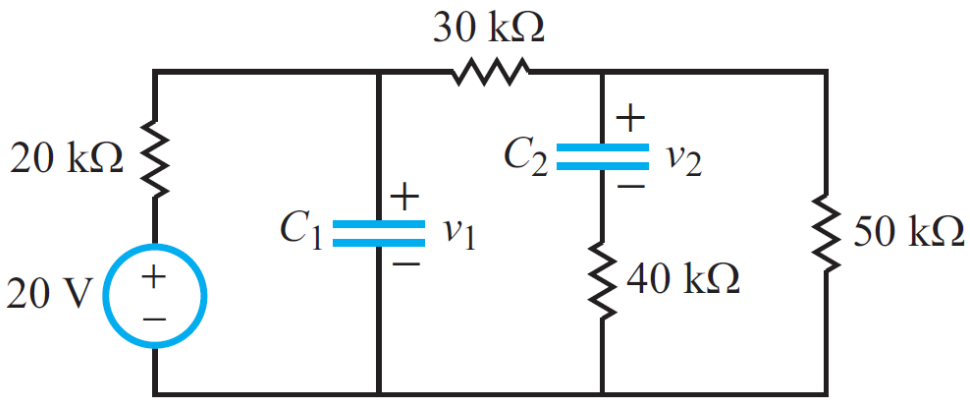

$$v_1 = \frac{30+50}{20+30+50} \cdot 20V = 16V$$

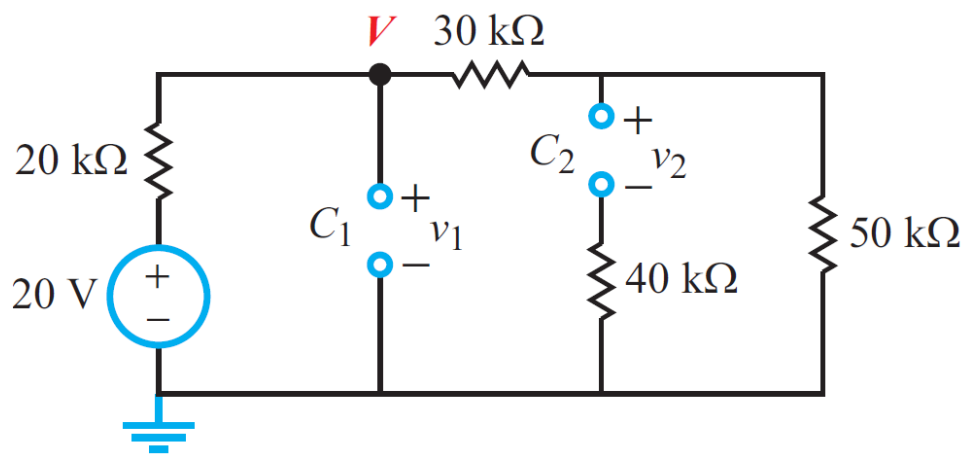

$$v_2 = \frac{50}{30+50} \cdot v_1 = 10V$$

Natural response of a charged capacitor

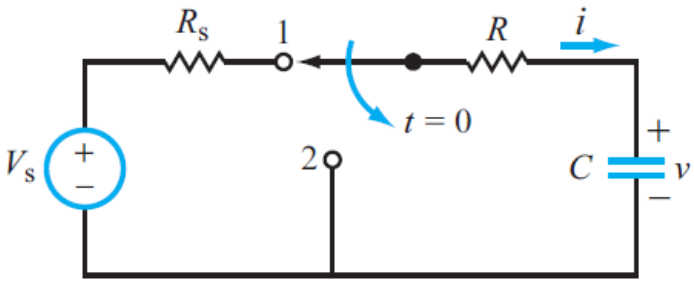

(a) RC circuit

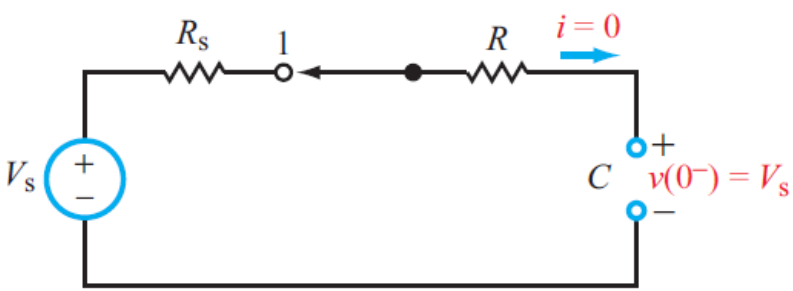

(b) At $t = 0^-$

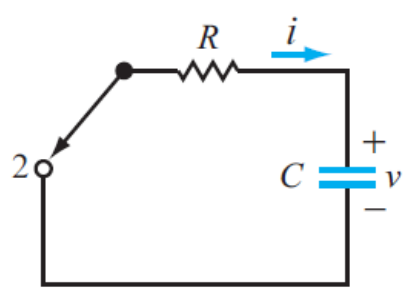

(c) At $t \geq 0$

(a) $t = 0^-$ is the instant just before the switch is moved from terminal 1 to terminal 2

(b) $t = 0$ is the instant just after it was moved; $t = 0$ is synonymous with $t = 0^+$

Since voltage across the capacitor **cannot** change instantaneously, it then follows that

$$v(t = 0) = v(t = 0^-) = V_s$$

At t = 0,

$$Ri(t) + v(t) = 0$$

$$RC\frac{dv(t)}{dt} + v(t) = 0$$

Solution:

$$v(t) = V_s e^{-t/\tau}$$

$$\tau = RC$$

*τ is called the **time constant** **of the circuit.***

Natural response of a charged capacitor

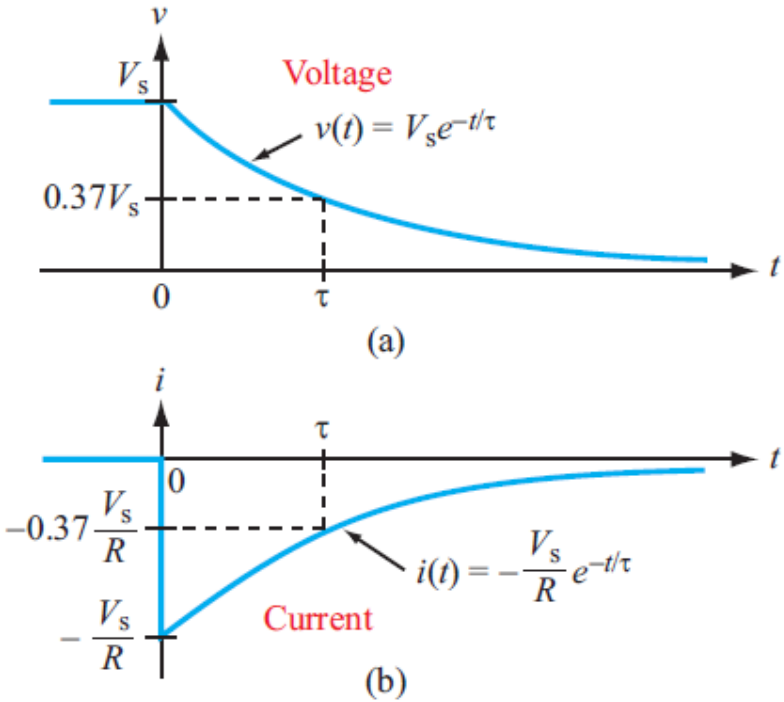

$$
\begin{aligned}
v(t) &= V_s e^{-t/\tau} \\
i(t) &= C\frac{dv}{dt} = C\frac{d}{dt}\left(V_s e^{-t/\tau}\right) \\
&= -C\frac{V_s}{\tau}e^{-t/\tau} \text{ for } t \geq 0 \\
&= -\frac{V_s}{R}e^{-t/\tau} \text{ for } t \geq 0
\end{aligned}
$$

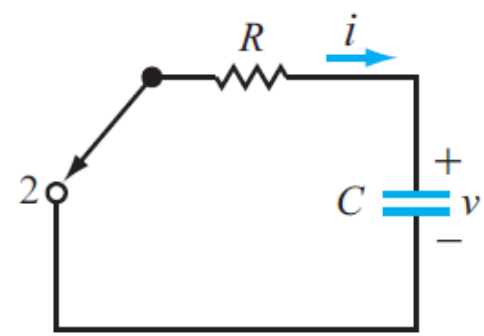

Forced response of a capacitor

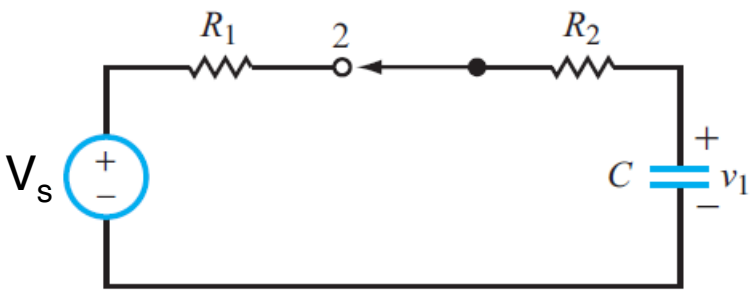

In this example,

$$\begin{aligned} v(0) &= 0 \\ v(\infty) &= V_s \\ v(t) &= V_s u(t) \\ \tau &= (R_1 + R_2)C \end{aligned}$$

$$\begin{aligned} (R_1 + R_2)i + v_1(t) &= V_s \\ (R_1 + R_2)C\frac{dv(t)}{dt} + v_1(t) &= V_s \end{aligned} \quad \Rightarrow v_1(t) = V_s\left(1 - e^{-t/\tau}\right)$$

General solution:

$$\boxed{v_1(t) = v(\infty) + [v(0) - v(\infty)]\, e^{-t/\tau}}$$

Capacitor charging and discharging

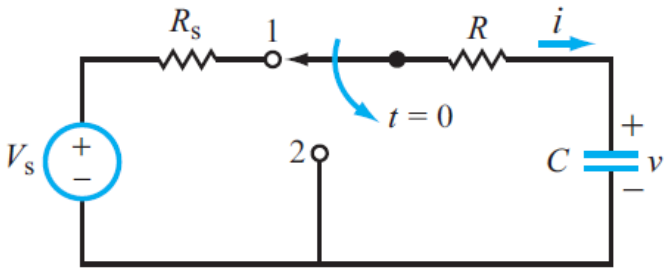

(a) RC circuit

$$\tau_1 = (R_s + R)C$$
$$\tau_2 = RC$$

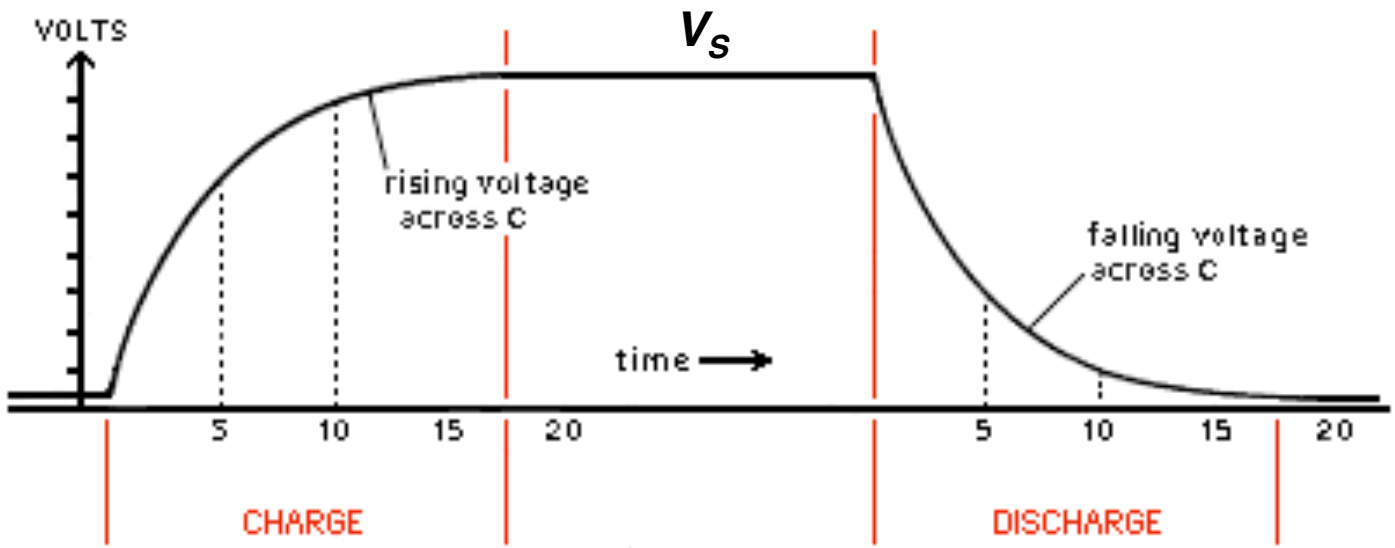

$$v(t) = V_s\left(1 - e^{-t/\tau_1}\right) \qquad v(t) = V_s e^{-t/\tau_2}$$

Capacitor in an AC circuit

Let's now assume that $v_S(t)$ is **harmonic (cosine or sine wave)** with amplitude, V_A, and frequency, f.

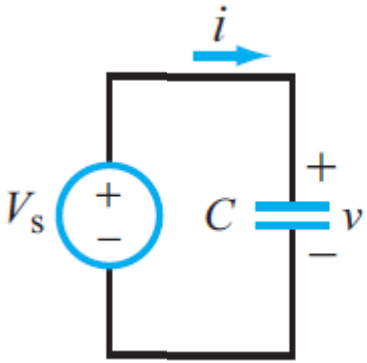

$$
\begin{aligned}
v_s(t) &= V_A cos(2\pi f t) \\
i(t) &= C\frac{dv(t)}{dt} \\
\Rightarrow i(t) &= -2\pi f V_A C sin(2\pi f t)
\end{aligned}
$$

- If $f=0$, how large is the current?
  → Looks like open circuit (this is steady state)
- If f is very very large, how big is the current?
  → Looks like a short circuit!
- What about v(t)?

Capacitor in an AC circuit

Still assume that voltage source $v_S(t)$ is **harmonic (cosine or sine wave)** with amplitude, V_A, and frequency, f, but let's add a resistor to the circuit.

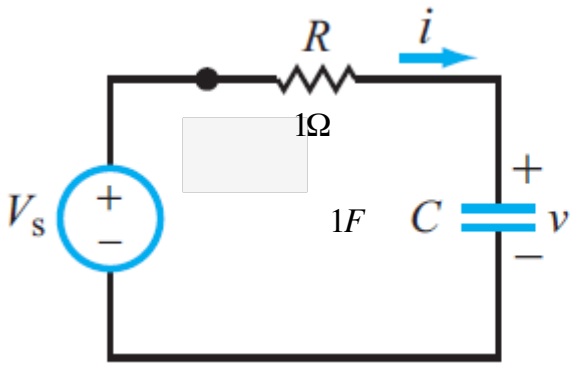

from KVL:

$$v_s(t) = Ri + v = RC\frac{dv}{dt} + v$$

$$\Rightarrow v(t) = \frac{V_A}{\sqrt{1 + (2\pi f RC)^2}} cos\,(2\pi f t + \psi)$$

$$\text{where, } \psi = -atan\,(2\pi f RC)$$

- As mentioned before, we will not worry about phase ψ
- Again, v(t) depends on f

Capacitor in AC circuit

$$V_s(t) = V_A \cos(2\pi f t)$$

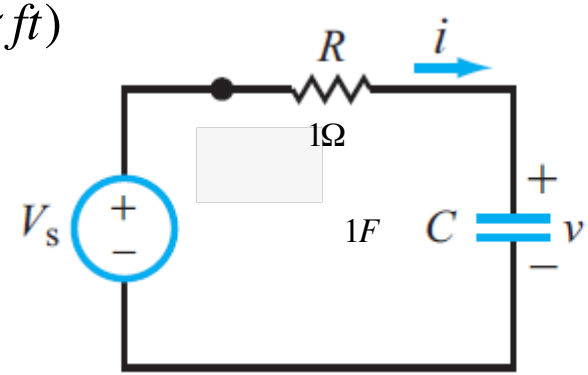

$$v(t) = \frac{V_A}{\sqrt{\left(1 + (\omega\tau)^2\right)}} \cos(2\pi f t + \psi),$$

where $\omega = 2\pi f$, and $\tau = RC$

- Voltage on the capacitor *v*(t) has the same form as source voltage, but with the following important differences:
  - **There is an additional phase term** ψ – Voltage on capacitor lags behind the source voltage. In ES 50, we will not worry about this.
  - **Amplitude of capacitor voltage depends on source frequency**
    - How big is max[v(t)] when: $\omega >> 1/\tau$ and $\omega << 1/\tau$

Capacitor uses

So far, we learned:

- For signals with very **low frequencies, as well as for DC signals, capacitor looks like an open circuit!**
- For signals with very **high frequencies, the capacitor looks like a short circuit!**

Now, let's apply this knowledge! Consider two circuits shown below.
How big is V_{out}, if:

1. Source with very low frequency is attached to V_{in}?
2. Source with very high frequency is attached to V_{in}?

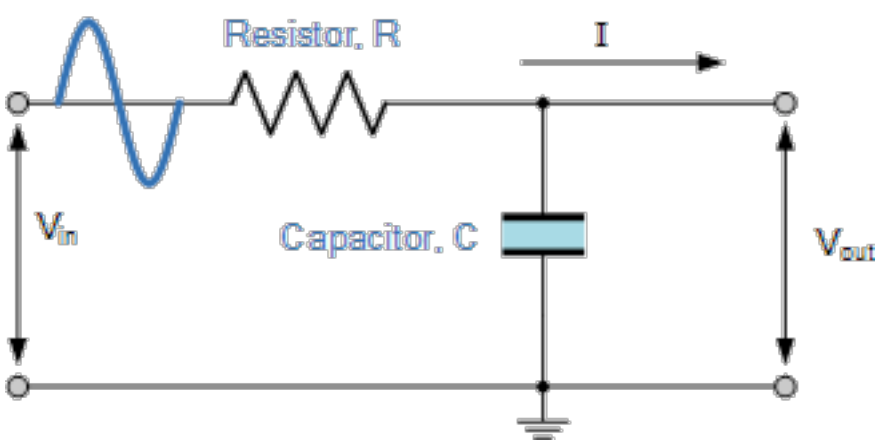

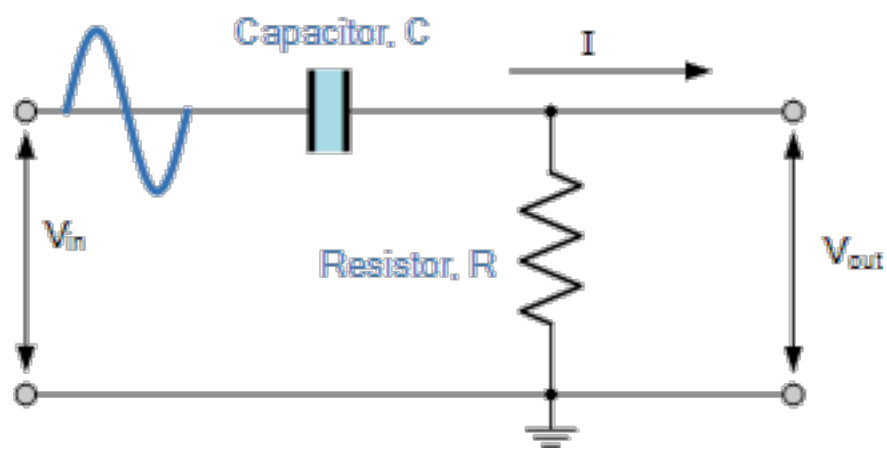

Low-pass filter **High-pass filter**

Example Circuit: Music via laser beam

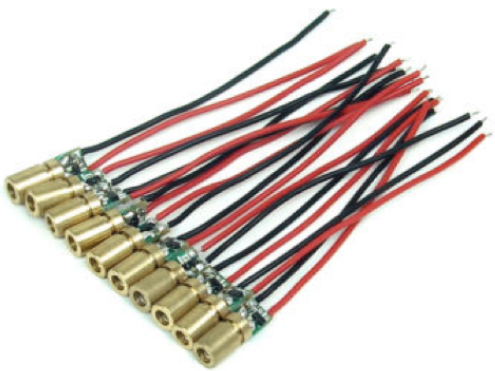

Goal: use a laser beam to transmit music;
Approach: *modulate* the laser intensity in sync with the music

Attempt 1: hook music source directly to laser
music quality bad – since lasers need to be biased

Attempt 2: bias the laser…. But there is a danger that you may *fry* your music source (iPhone) by sending DC current through it

Solution: use a CAPACITOR to **decouple** the bias circuit from the music source!

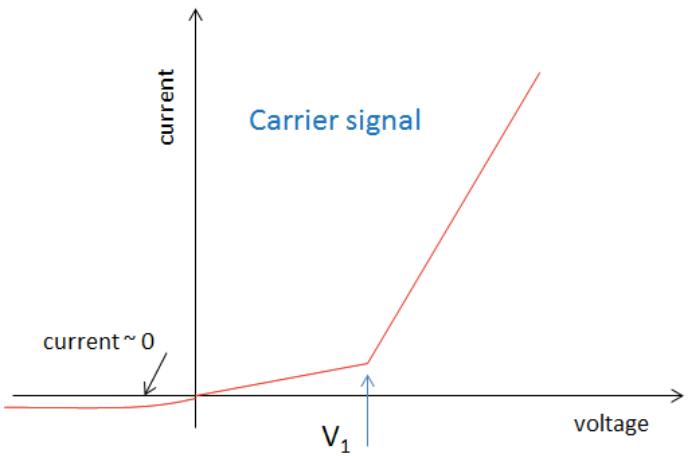

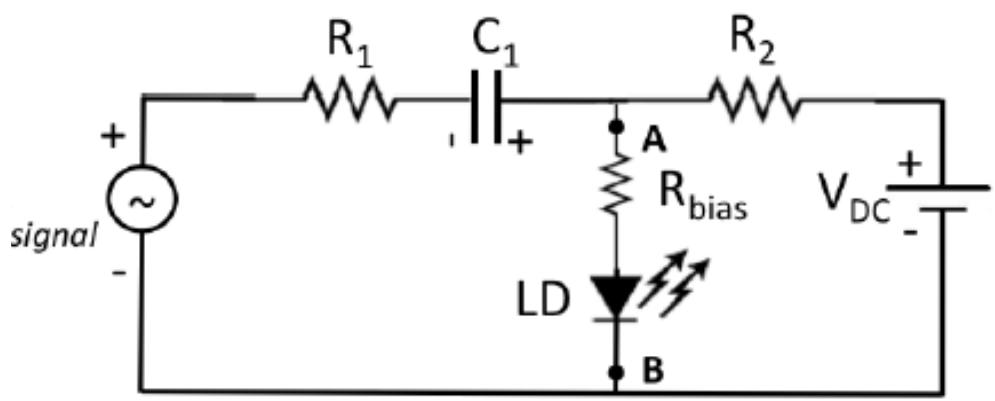

Multiple capacitors in series

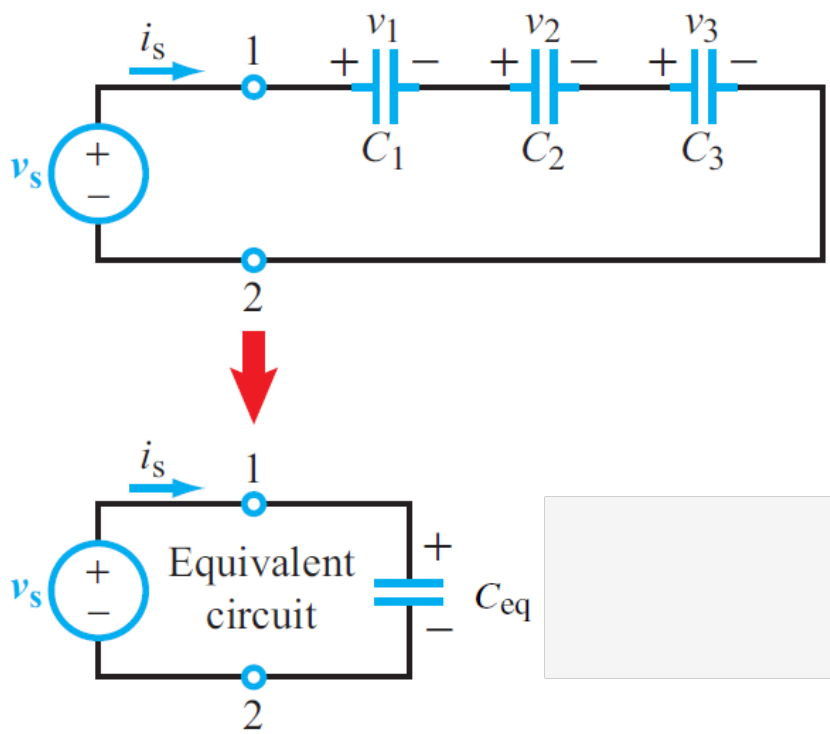

Use KVL, b/c the same current "flows" through each capacitor

$$i_s = C_1\frac{dv_1}{dt} = C_2\frac{dv_2}{dt} = C_3\frac{dv_3}{dt}$$

and

$$v_s = v_1 + v_2 + v_3$$

$$\begin{aligned} i_s &= C_{eq}\frac{dv_s}{dt} \\ &= c_{eq}\left(\frac{dv_1}{dt} + \frac{dv_2}{dt} + \frac{dv_3}{dt}\right) \\ &= c_{eq}\left(\frac{i_s}{C_1} + \frac{i_s}{C_2} + \frac{i_s}{C_3}\right) \end{aligned}$$

$$\Rightarrow \frac{1}{C_{eq}} = \frac{1}{C_1} + \frac{1}{C_2} + \frac{1}{C_3}$$

$$C_{eq} = \frac{1}{\frac{1}{C_1} + \frac{1}{C_2} + \frac{1}{C_3}}$$

Multiple capacitors in parallel

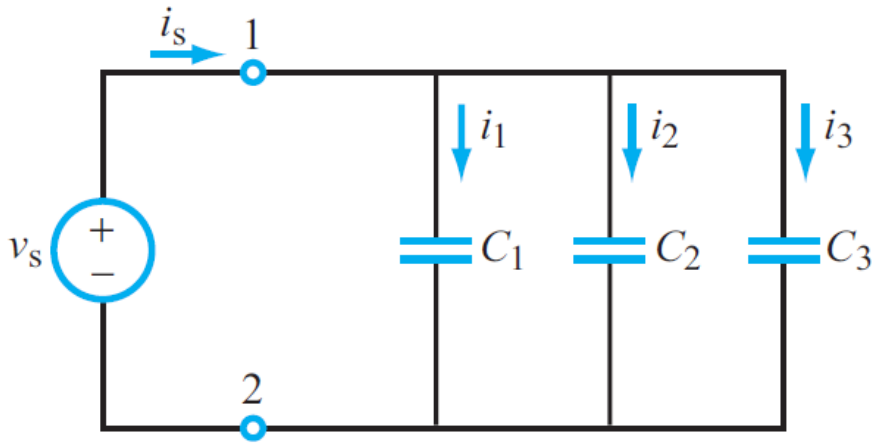

$$i_s = C_{eq}\frac{dv_s}{dt}$$

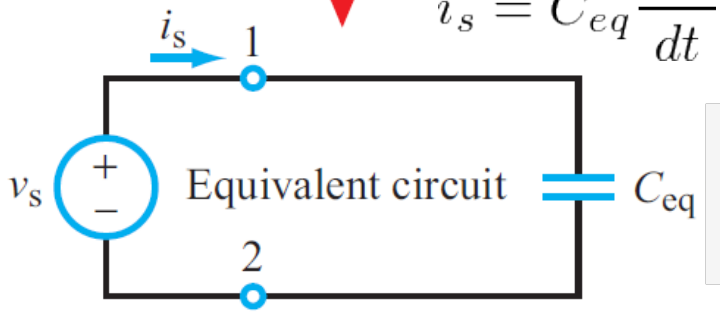

Use KCL, b/c the voltage is the same across each capacitor

$$\begin{aligned} i_s &= i_1 + i_2 + i_3 \\ &= C_1\frac{dv_s}{dt} + C_2\frac{dv_s}{dt} + C_3\frac{dv_s}{dt} \\ &= (C_1 + C_2 + C_3)\frac{dv_s}{dt} \end{aligned}$$

$$\Rightarrow C_{eq} = C_1 + C_2 + C_3$$

Summary of capacitors in series and parallel

capacitors in series

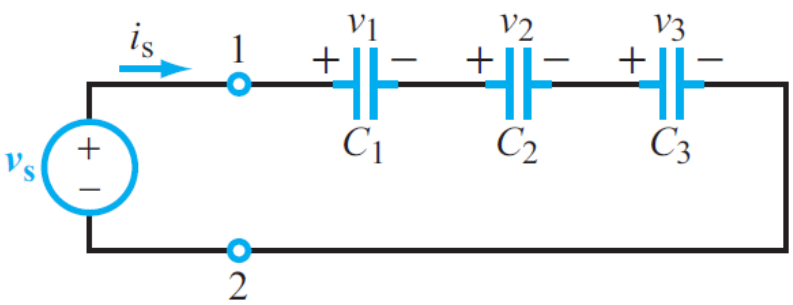

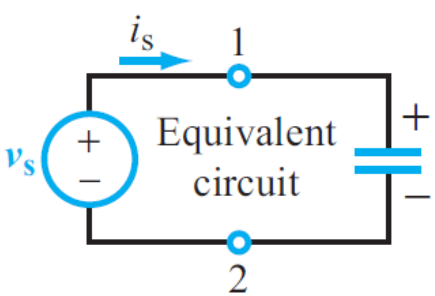

$$C_{eq} = \left(\frac{1}{C_1} + \frac{1}{C_2} + \frac{1}{C_3}\right)^{-1}$$

capacitors in parallel

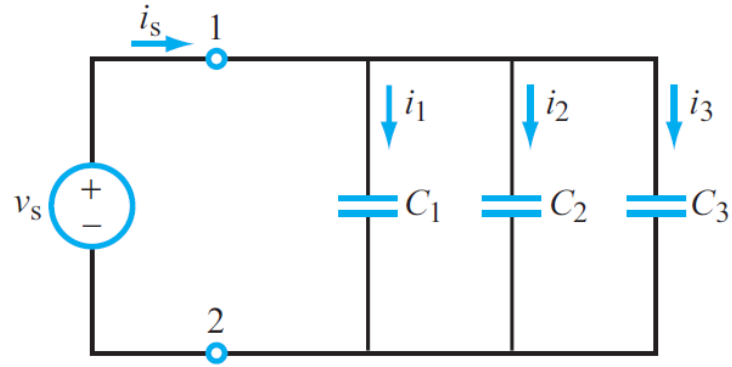

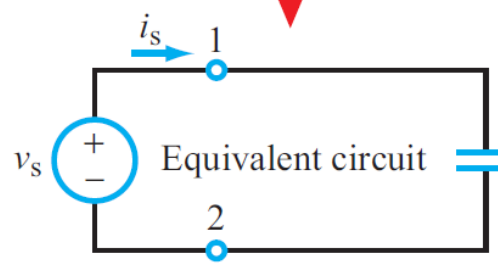

$$C_{eq} = C_1 + C_2 + C_3$$

Example: v_i is a rectangular pulse

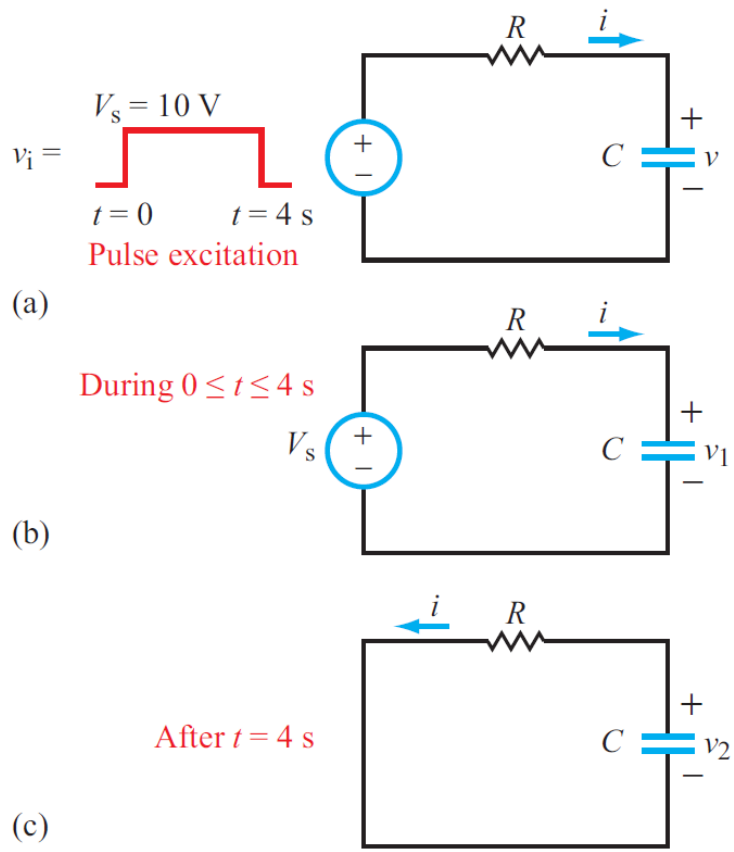

$$v_i(t) = V_s u(t) - V_s u(t-4)$$

Example: v_i is a rectangular pulse

During $0 \le t \le 4$ s

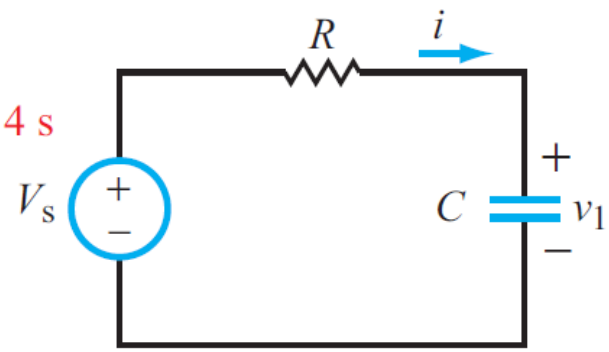

- Assume V_s = 10V, R = 25kΩ, and C = 200μF. Then, τ = 5s.
- Recall forced response is:

$$v(t) = V_s\left(1 - e^{-t/\tau}\right)$$

$$v_1(t) = 10\left(1 - e^{-0.2t}\right)$$

$$v_1(t = 4) = 10\left(1 - e^{-0.8}\right) \approx 5.51$$

Example: v_i is a rectangular pulse

After $t = 4$ s

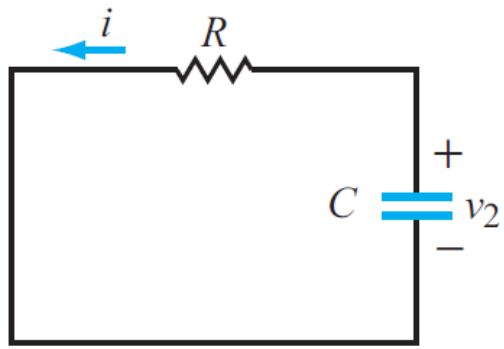

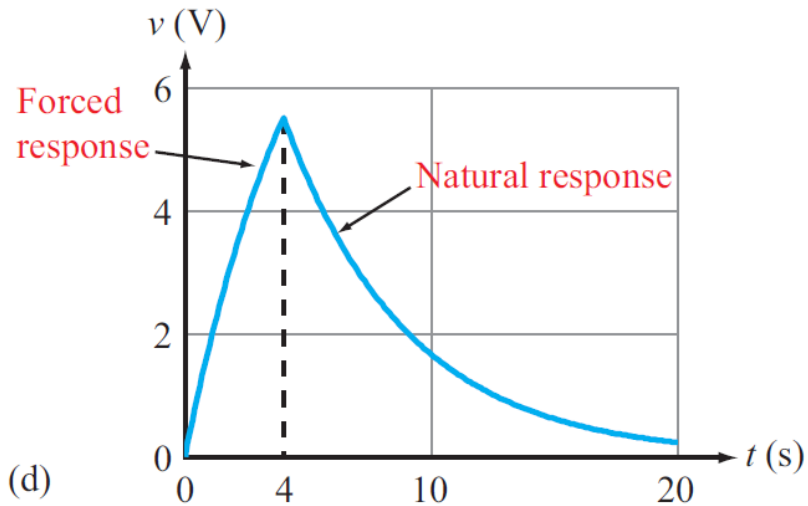

(d)

- Now, the second response $v_2(t)$ has a $-V_s$ step at 4s, which means (for $t \geq 4$s):

$$v_2(t) = -10\left(1 - e^{-(t-4)/\tau}\right)$$

$$\begin{aligned} v(t) &= v_1(t) + v_2(t) \\ &= 10\left(1 - e^{-0.2t}\right) - 10\left(1 - e^{-0.2(t-4)}\right)u(t-4) \end{aligned}$$

Op-amp circuit: Ideal integrator

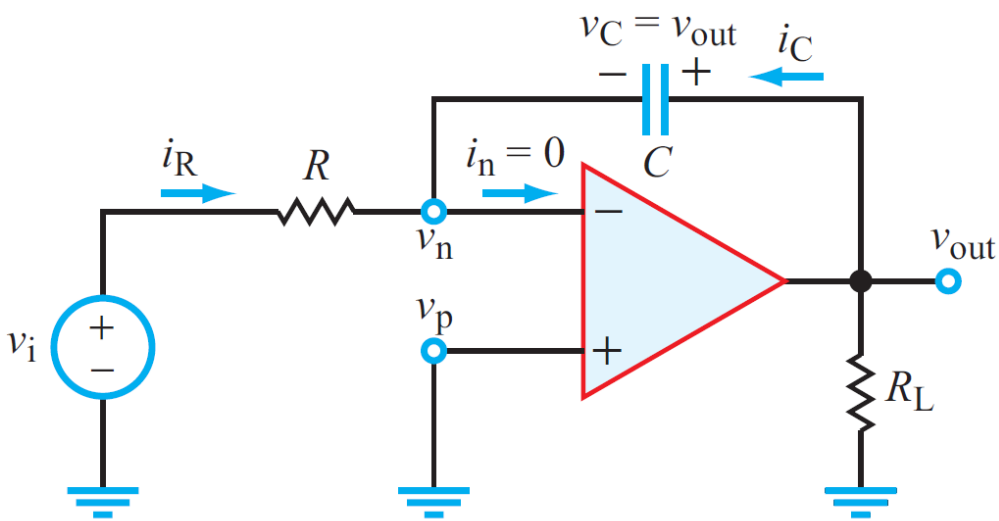

$$i_C = C\frac{dv_{out}}{dt}$$

$$i_R = \frac{v_i}{R}$$

$$i_C + I_R = 0$$

$$\frac{dv_{out}}{dt} = -\frac{1}{RC}v_i$$

$$\int_{t_0}^{t}\left(\frac{dv_{out}}{dt}\right)dt = -\frac{1}{RC}\int_{t_0}^{t} v_i dt$$

$$\Rightarrow v_{out}(t) = -\frac{1}{RC}\int_{t_0}^{t} v_i dt + v_{out}(t_0)$$

Op-amp circuit: Ideal differentiator

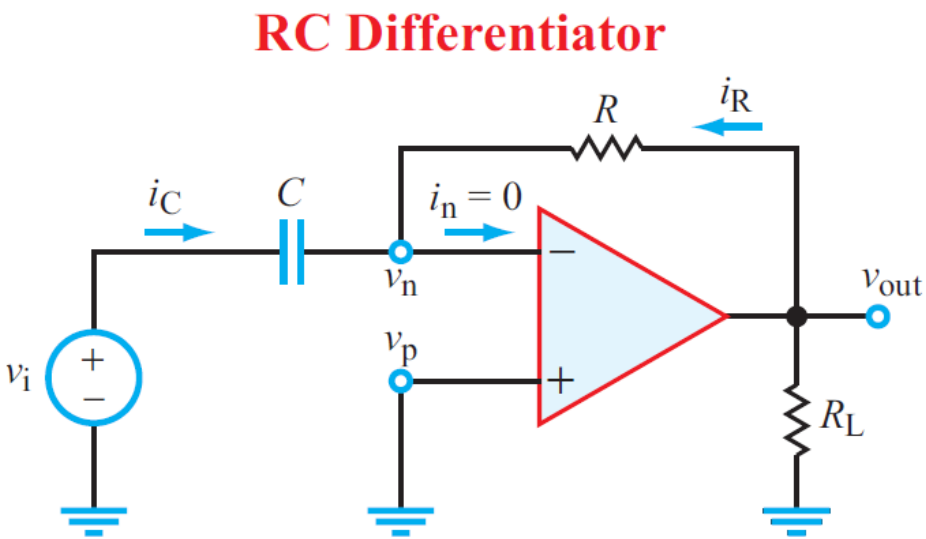

$$i_C = C\frac{dv_i}{dt}$$

$$i_R = \frac{v_{out}}{R}$$

$$i_C = -i_R$$

$$\Rightarrow v_{out} = -RC\frac{dv_i}{dt}$$

Electromagnetic Induction - Faraday's Law

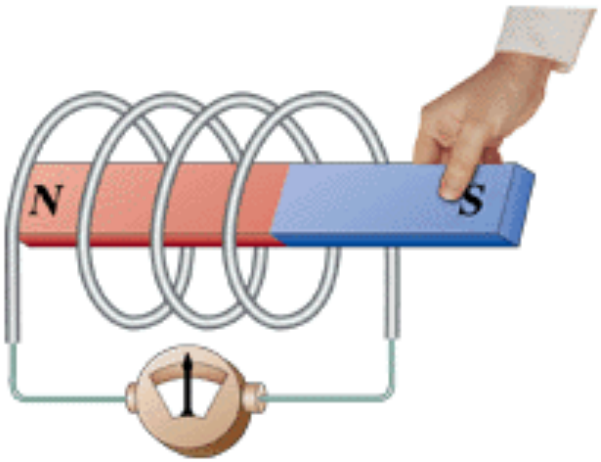

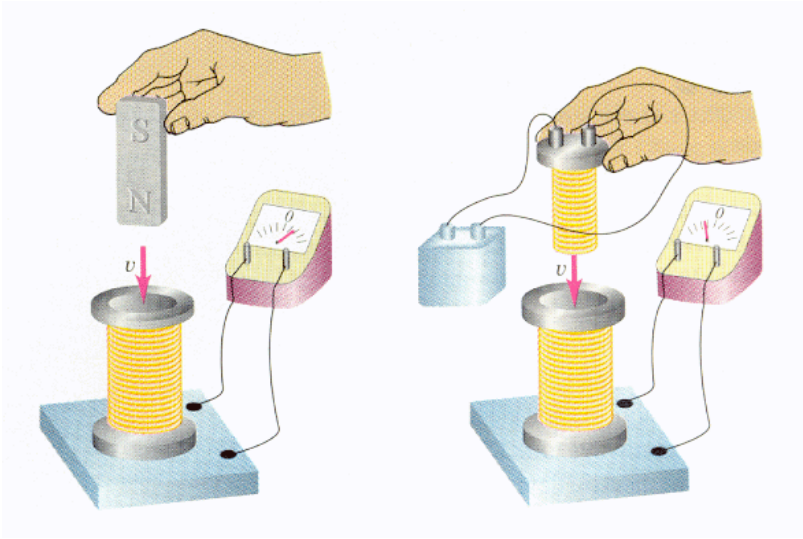

$$V = -\frac{d\Phi}{dt} = -\frac{d(B * A)}{dt}$$

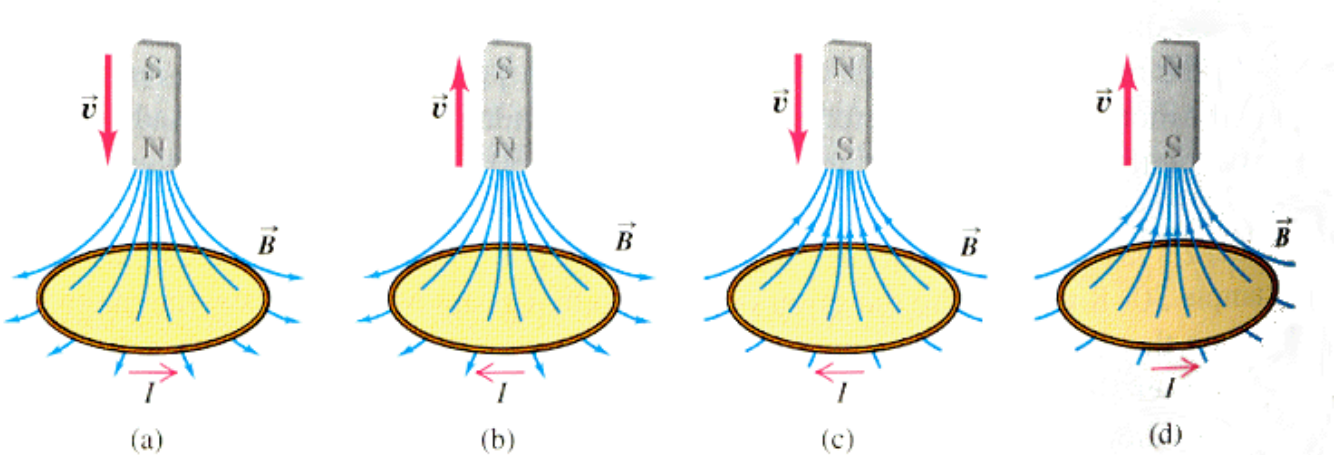

Generation of electricity

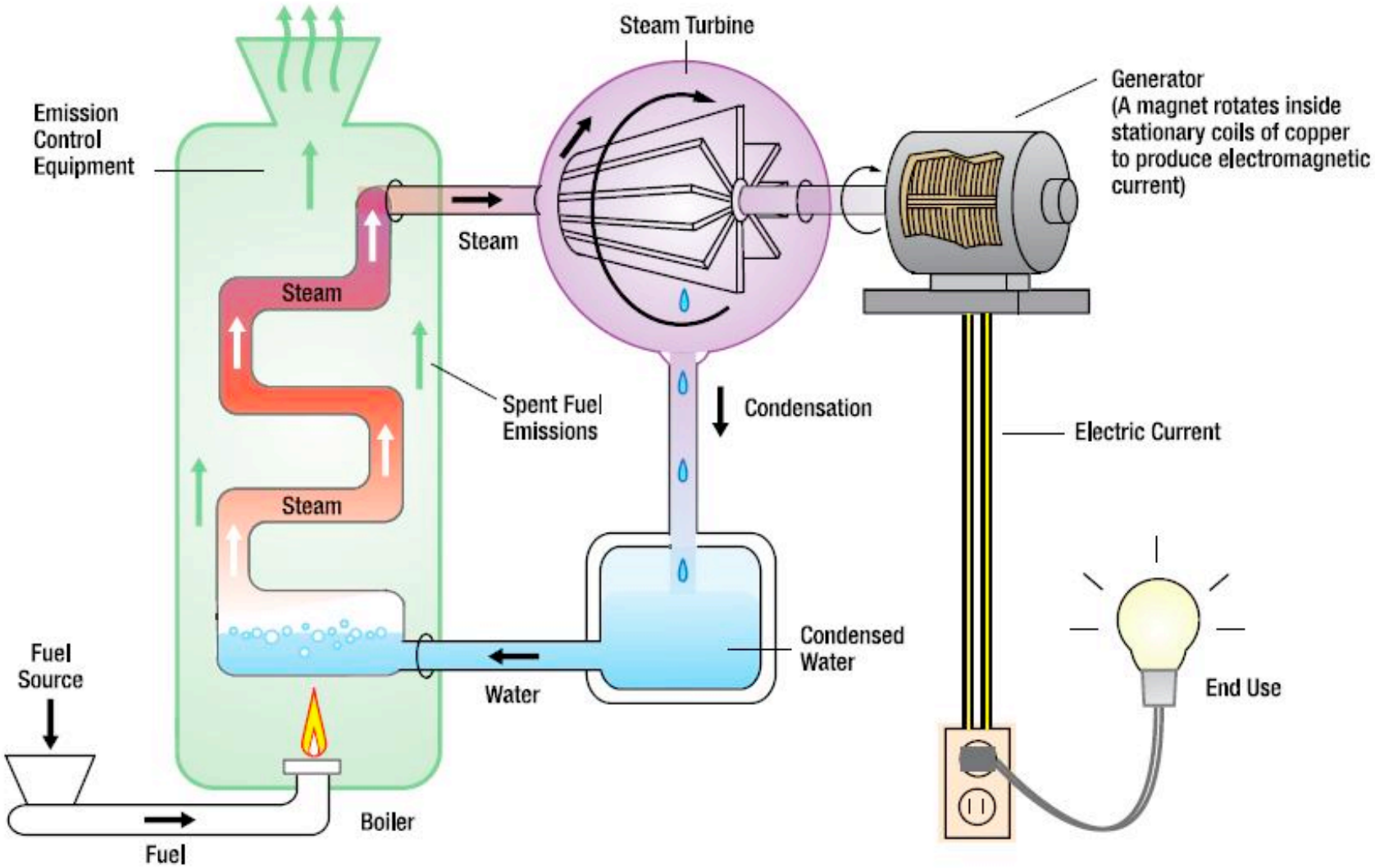

Electromagnetic Induction & Apps

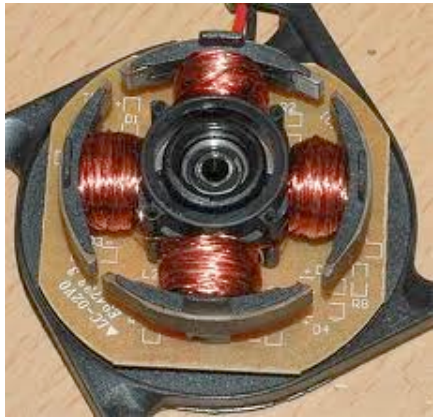

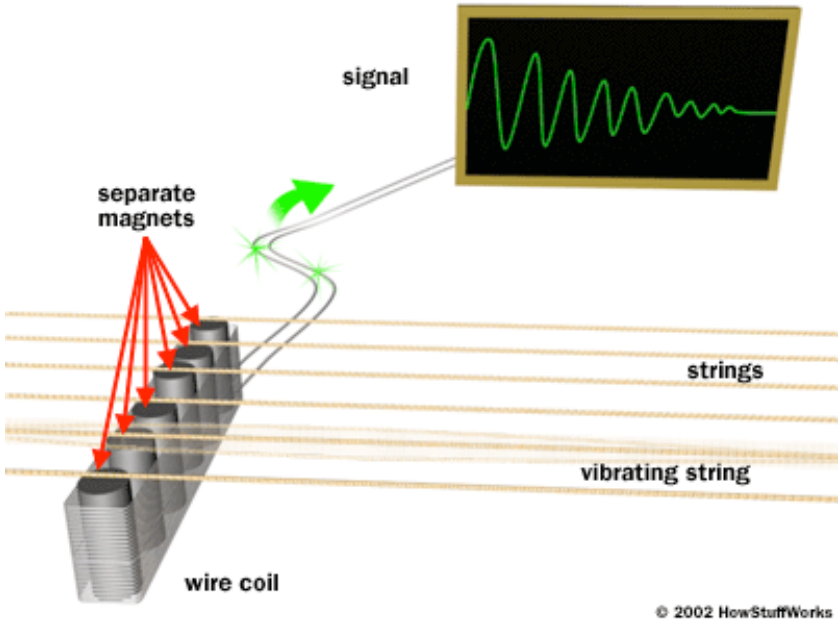

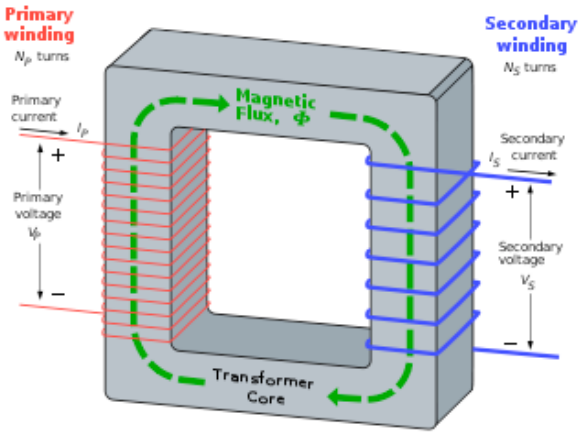

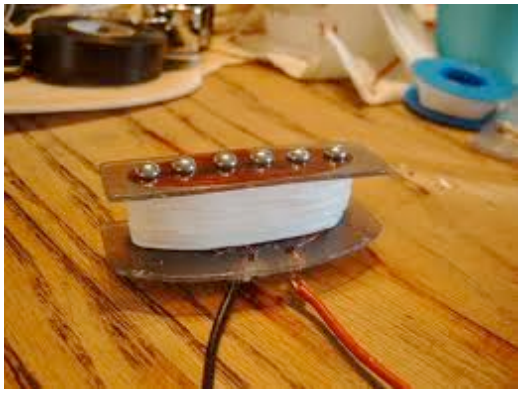

Inductor

A passive element that stores energy in the magnetic field

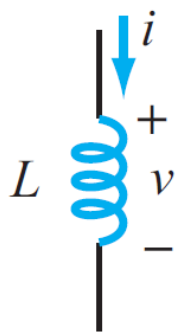

$$v(t) = L\frac{di(t)}{d(t)}$$

$$=> i = \frac{1}{L}\int_{t_o}^{t} v(t)\,dt + i(t_0)$$

Energy stored in inductor

$$w = \frac{1}{2}Li^2 \qquad \text{(J)},$$

Solenoid Wound Inductor

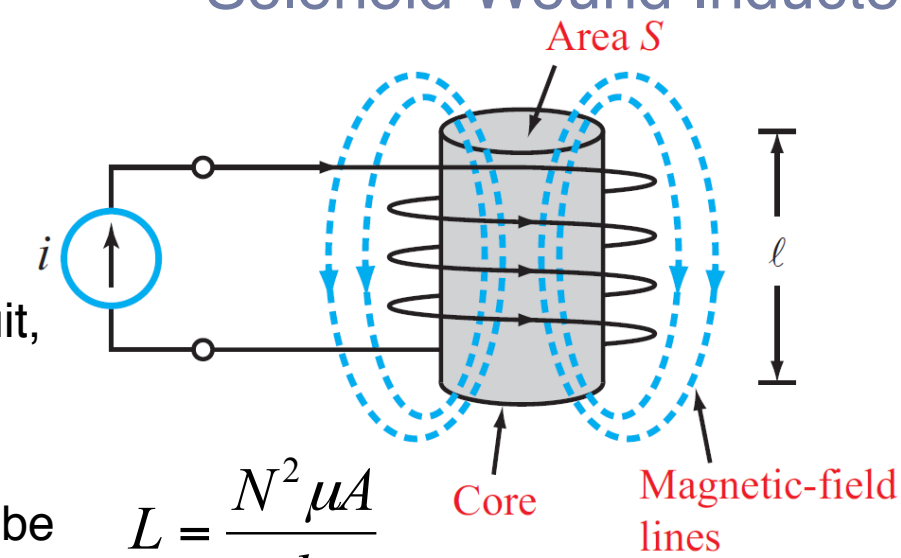

$$L = \frac{N^2 \mu A}{l}$$

- In the case of a steady-state DC circuit, an inductor looks like a short circuit
  - Why?
- Also, current through inductor should be continuous (no abrupt change)

Inductors in Series & Parallel

Inductors in Series

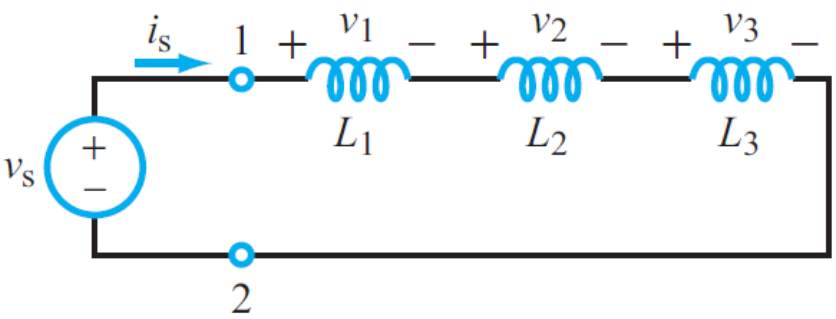

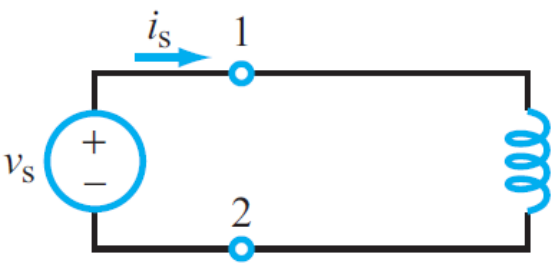

$$L_{eq} = L_1 + L_2 + L_3$$

Inductors in Parallel

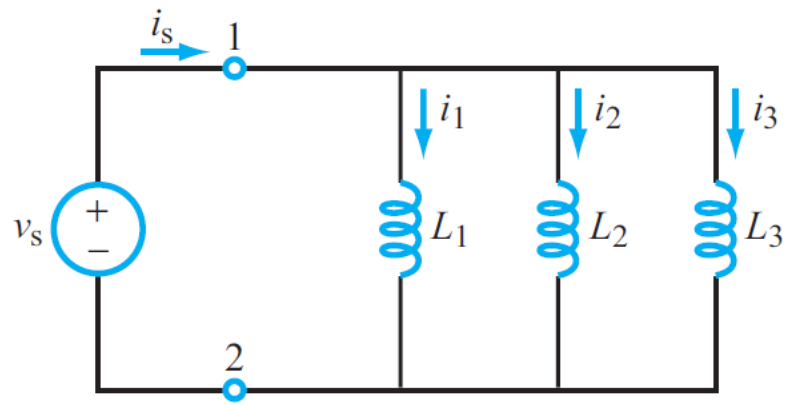

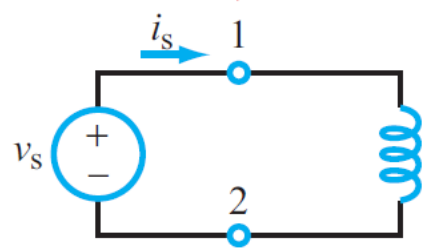

$$L_{eq} = \left(\frac{1}{L_1} + \frac{1}{L_2} + \frac{1}{L_3}\right)^{-1}$$

Basic properties of R, L, C elements

Property	R	L	C
i–v relation	$i = \frac{v}{R}$	$i = \frac{1}{L}\int_{t_0}^{t} v\,dt + i(t_0)$	$i = C\frac{dv}{dt}$
v-i relation	$v = iR$	$v = L\frac{di}{dt}$	$v = \frac{1}{C}\int_{t_0}^{t} i\,dt + v(t_0)$
p (power transfer in)	$p = i^2R$	$p = Li\frac{di}{dt}$	$p = Cv\frac{dv}{dt}$
w (stored energy)	0	$w = \frac{1}{2}Li^2$	$w = \frac{1}{2}Cv^2$
Series combination	$R_{eq} = R_1 + R_2$	$L_{eq} = L_1 + L_2$	$C_{eq} = \frac{C_1C_2}{C_1 + C_2}$
Parallel combination	$R_{eq} = \frac{R_1R_2}{R_1 + R_2}$	$L_{eq} = \frac{L_1L_2}{L_1 + L_2}$	$C_{eq} = C_1 + C_2$
dc behavior	no change	short circuit	open circuit
Can v change instantaneously?	yes	yes	no
Can i change instantaneously?	yes	no	yes