ES 50: Introduction to Electrical Eng.

Explore EE, satisfy a Gen Ed requirement & have fun

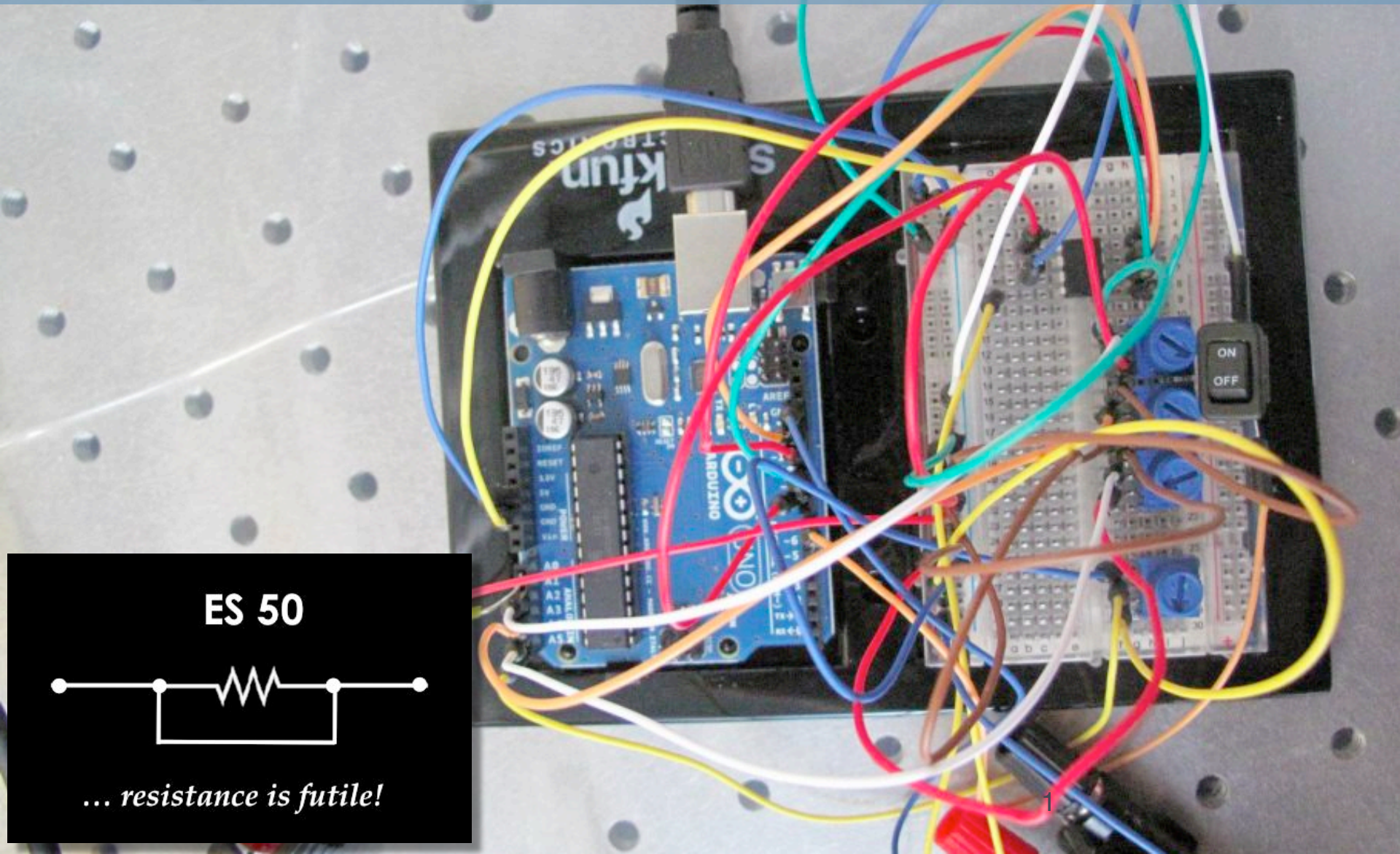

ES 50

… resistance is futile!

Lecture 5: Amplifiers (Part 1)

ES 50: Introduction to Electrical Engineering

Announcements

- **HW #2 posted and due at 9PM on Saturday, 9/25/15 in MD drop boxes**

- **Lab #2 material posted.**

- **New date for Quiz #2 is Wed, Nov 18, 2015!!! Go Crimson!**

Last time…

- Learned how to use KCL & KVL to solve circuit problems
- *Parallel and series* connection of resistors and other circuit elements
- Voltage divider and current divider
- Nodal analysis
- Superposition

Today…

- Dependent (voltage and current) sources
- Thevenin and Norton equivalent circuits
- Operational Amplifiers
  - Ideal characteristics
  - Realistic example
- Op-amp circuits

Dependent sources

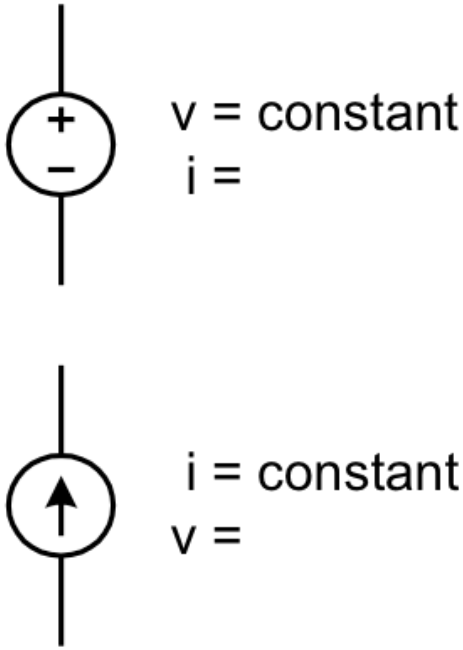

Ideal Independent Sources

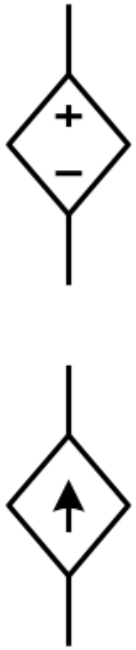

Ideal Dependent Sources

- Different types:
  - Voltage-controlled voltage source (VCVS)
  - Current-controlled voltage source (CCVS)
  - Voltage-controlled current source (VCCS)
  - Current-controlled current source (CCCS)

Example circuit with CCCS

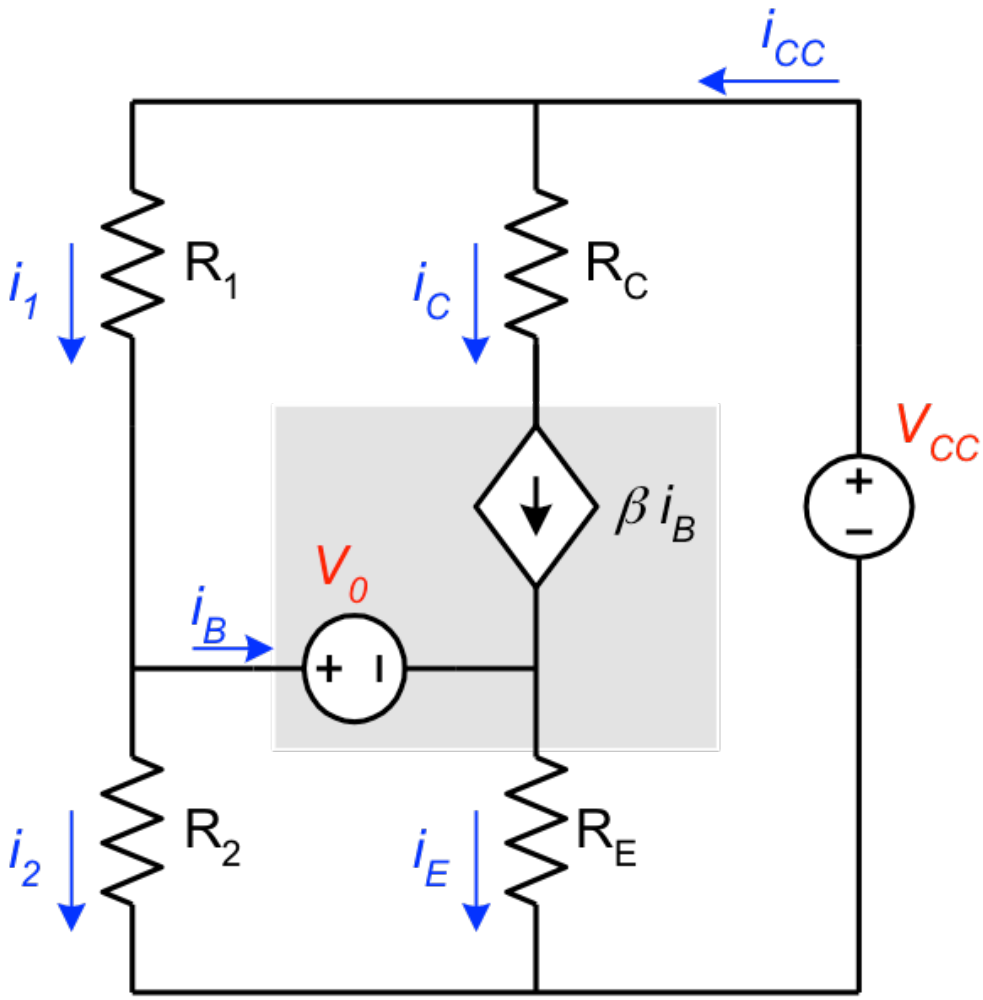

We can write the following equations:

$$i_1 + i_C - i_{CC} = 0$$

$$i_B + i_2 - i_1 = 0$$

$$i_E - i_B - i_C = 0$$

$$i_C = \beta i_B$$

$$V_0 + i_E R_E - i_2 R_2 = 0$$

$$-i_1 R_1 + V_{CC} - i_2 R_2 = 0$$

Source transformations

- Source transformations can be a useful way to simplify circuits
- Thevenin equivalent circuit
  - Can represent any circuit made up of sources (both independent and dependent) and resistors

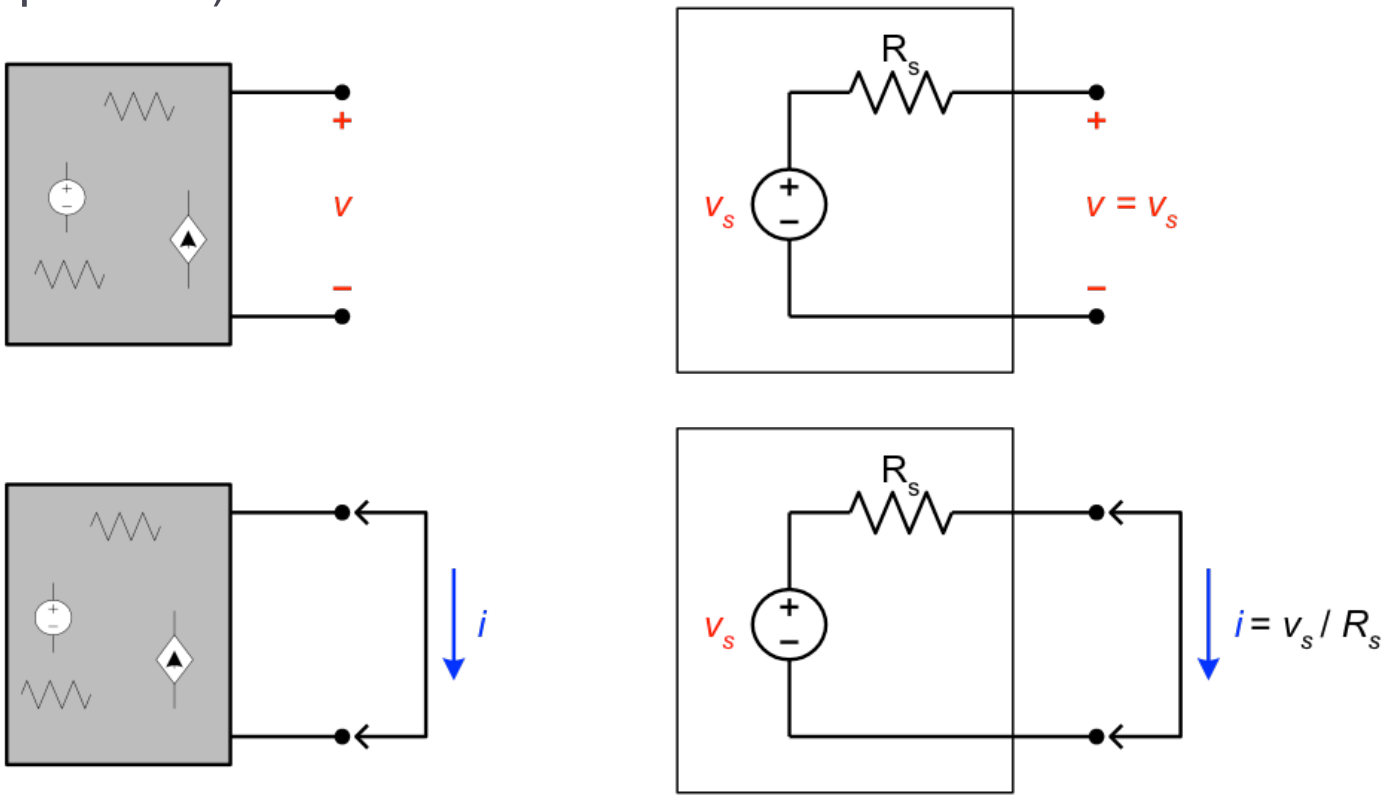

Thevenin and Norton equivalent circuits

- Thevenin and Norton equivalent circuits are equivalent to one another…

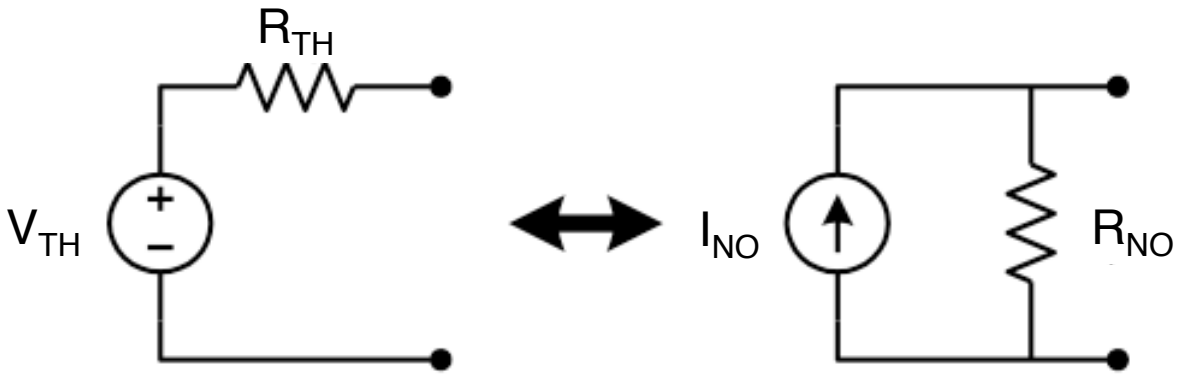

Thevenin **Norton**

$$
\begin{aligned}
\text{If output shorted: } I_{NO} &= \frac{V_{TH}}{R_{TH}} \\
\text{If output open: } V_{TH} &= I_{NO} R_{NO} \\
\Rightarrow R_{NO} &= \frac{V_{TH}}{I_{NO}} = R_{NO}
\end{aligned}
$$

Amplifiers

Strong Signal Out:
Amplified replica of input signal

Weak Signal In:
e.g., from microphone, guitar, neurons firing, etc.

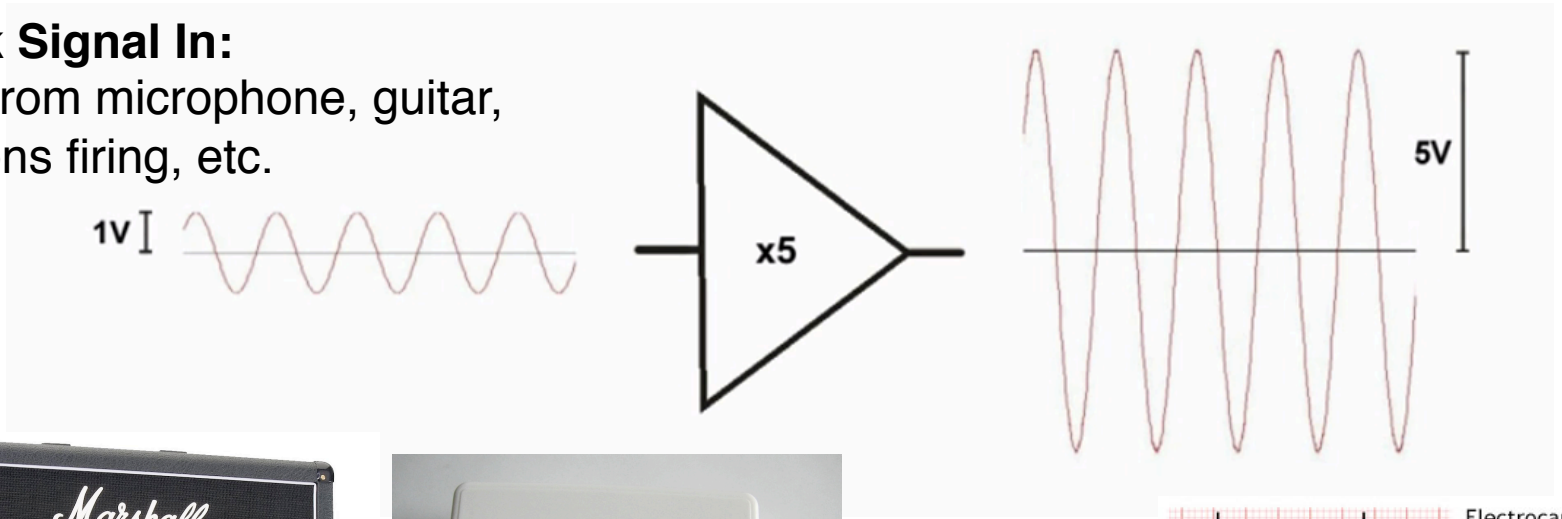

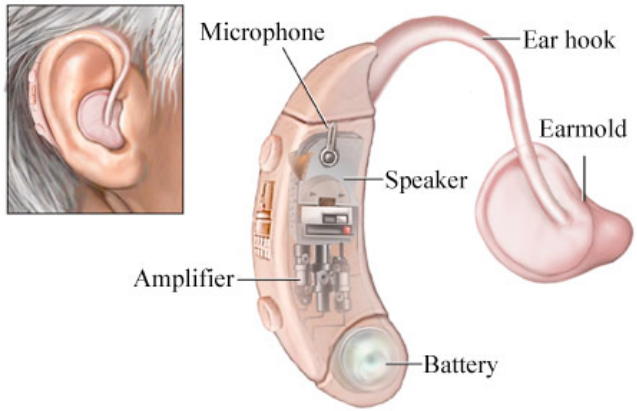

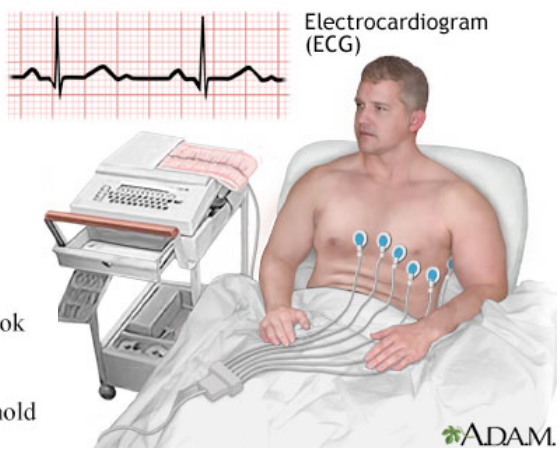

Amplification with amplifiers

- Can we amplify signals using resistors only?
  - Let's think of voltage divider run "in reverse." Would that work?
- How would you build an *amplifier* from the elements that we used so far (voltage and current sources, resistors, dependent sources) if some "tweaks" were allowed?
- What characteristics would you want an *ideal* amplifier to have?
  - Take a lot or little power from the source that you are amplifying? (large or small input resistance?)
  - Behave as an ideal or non-ideal voltage source at the output? (large or small output resistance?)
  - Fixed gain or gain that you can control (maybe with additional circuitry)?
  - Anything else?

Equivalent circuit for the Op-Amp

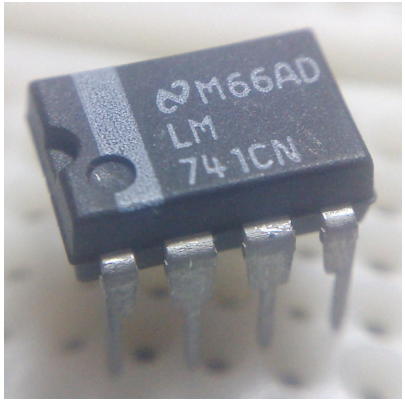

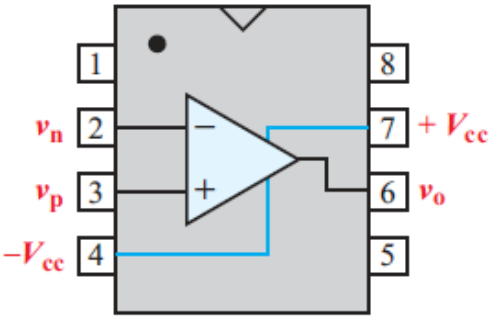

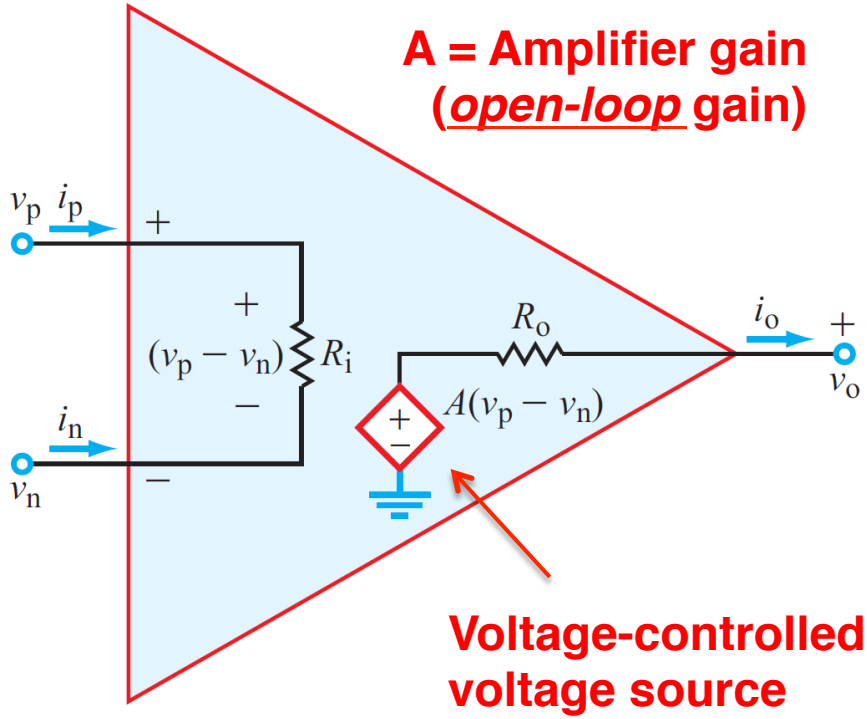

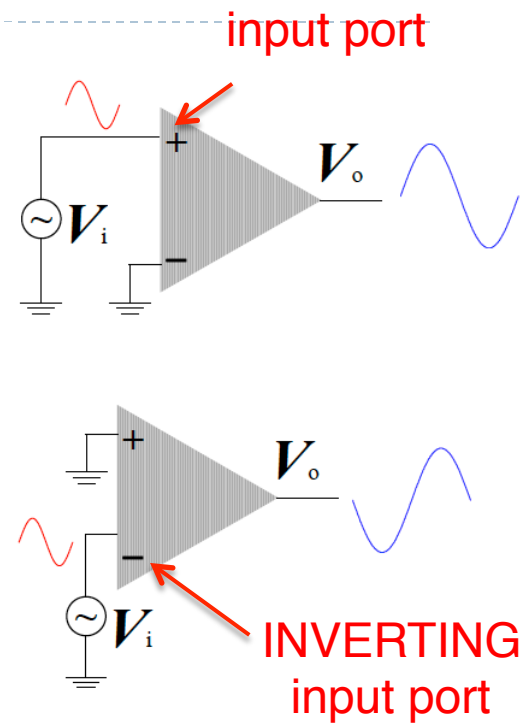

Op-Amp Characteristics	Parameter	Typical Range	Ideal Op Amp
• Linear input–output response	Open-loop gain A	10^4 to 10^8 (V/V)	∞
• High input resistance	Input resistance R_i	10^6 to 10^{13} Ω	∞ Ω
• Low output resistance	Output resistance R_o	1 to 100 Ω	0 Ω
• Very high gain	Supply voltage V_{cc}	5 to 24 V	As specified by manufacturer

What Is Inside the Op-Amp (741)

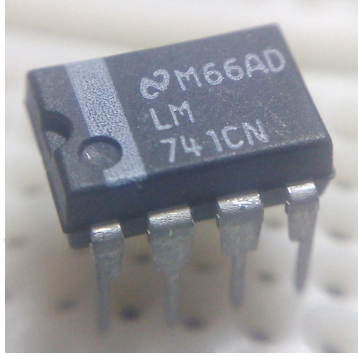

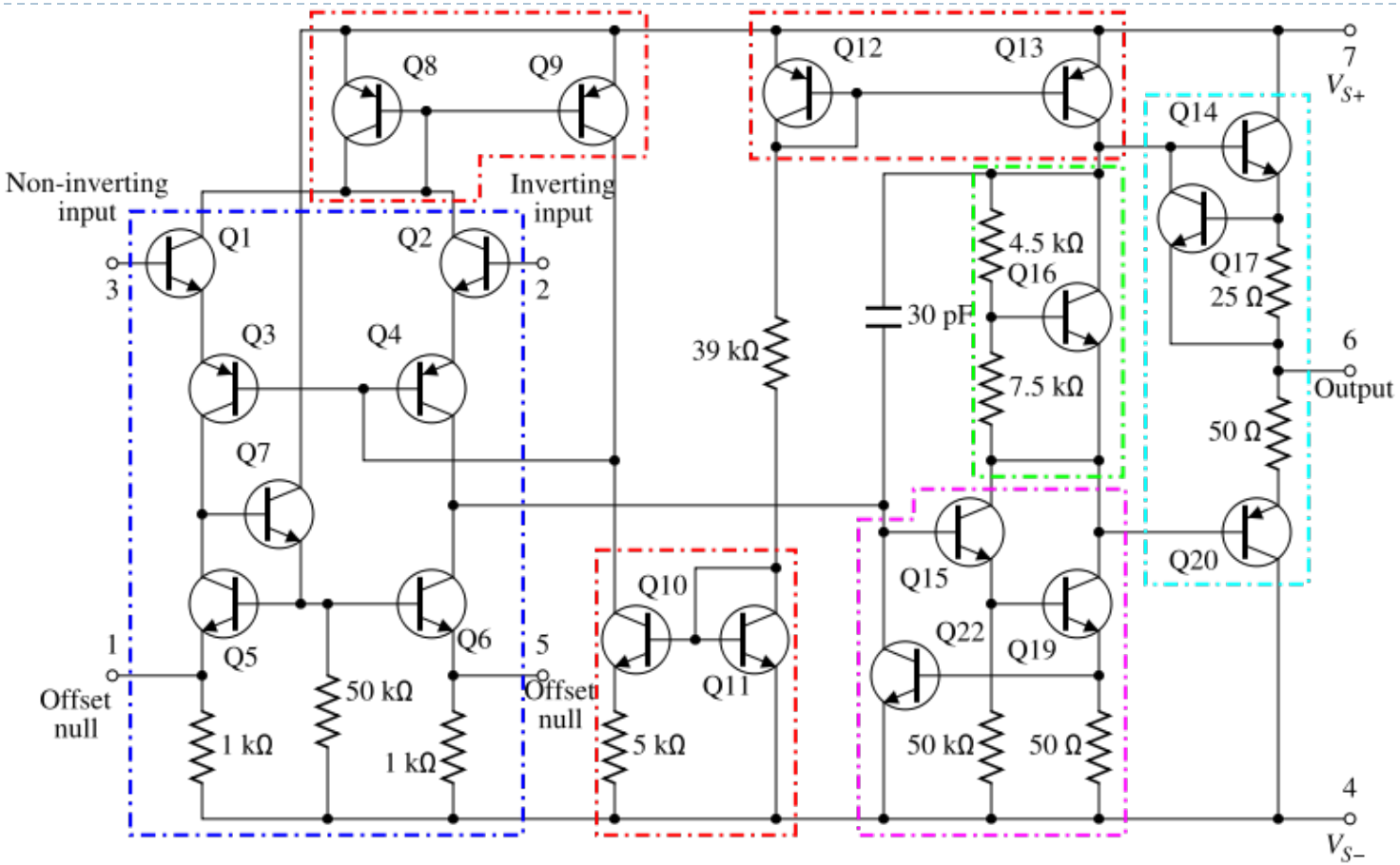

- A component level diagram of the common 741 op-amp.
- In ES 50 we will not deal with Op-Amps at this level.
  To learn more, take ES 154: Electronics Devices and Circuits.

Operational Amplifier (op-amp)

- Before digital computers, we had analog computers that used amplifiers for analog computation. These *operational amplifiers* were used to perform mathematical *operations.*
- A bit of history
  - μA702 is the first op-amp released in 1964 by Fairchild Semiconductor and designed by Bob Widlar (very well-known circuit designer).
  - μA741 was released in 1968, designed by Dave Fullagar (founder of Maxim Integrated Products) while at Fairchild. Still widely used today and available from many companies. Has internal 30pF compensation capacitor, which makes it easy to use without additional external components (i.e., external compensation capacitor).

An even simpler circuit: Ideal Op-Amp

<u>Ideal Op-Amp Golden Rules:</u>

SUPER IMPORTANT!
Significantly simplifies analysis of circuits with Op-Amps

- R_i = infinity => $i_p = i_n = 0$
- $R_o = 0$
- Built-in gain, A, is infinitely large
  → $v_p = v_n$

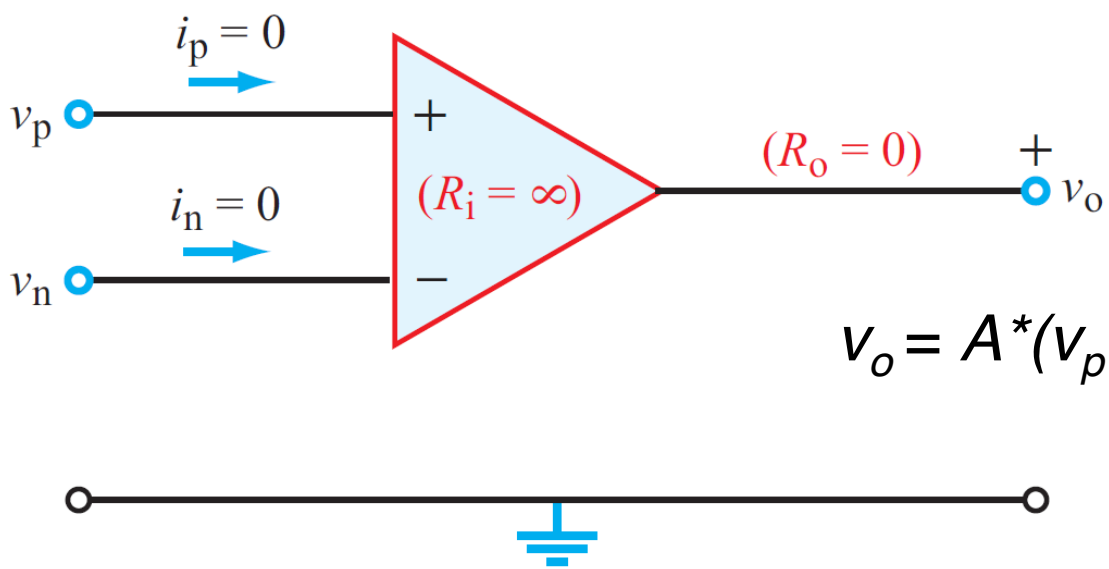

$$v_o = A^*(v_p - v_n)$$

Q: Where does all that extra power come from?
A: Bias sources!

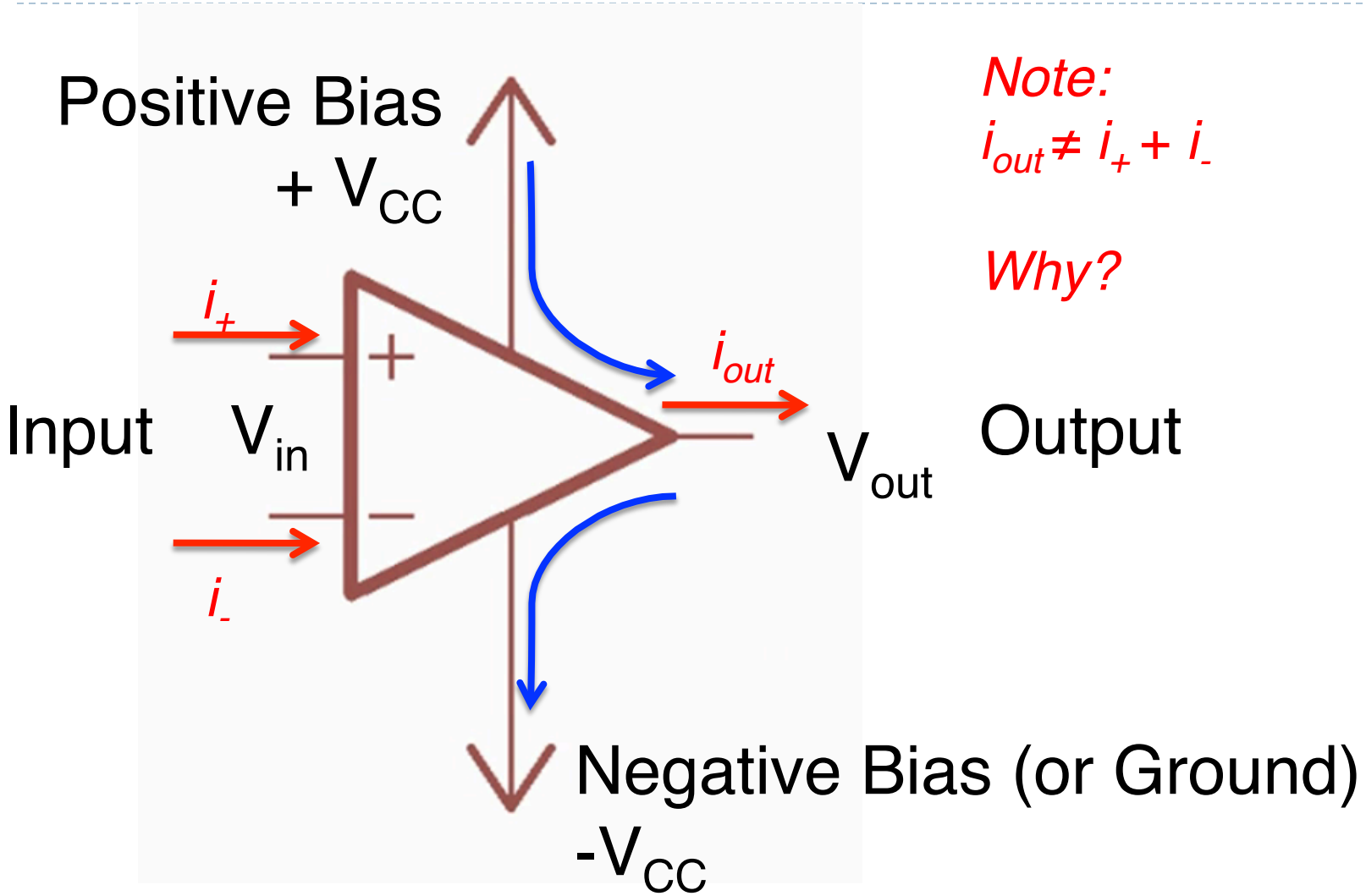

Note:
$i_{out} \neq i_+ + i_-$

Why?

The Importance of Bias

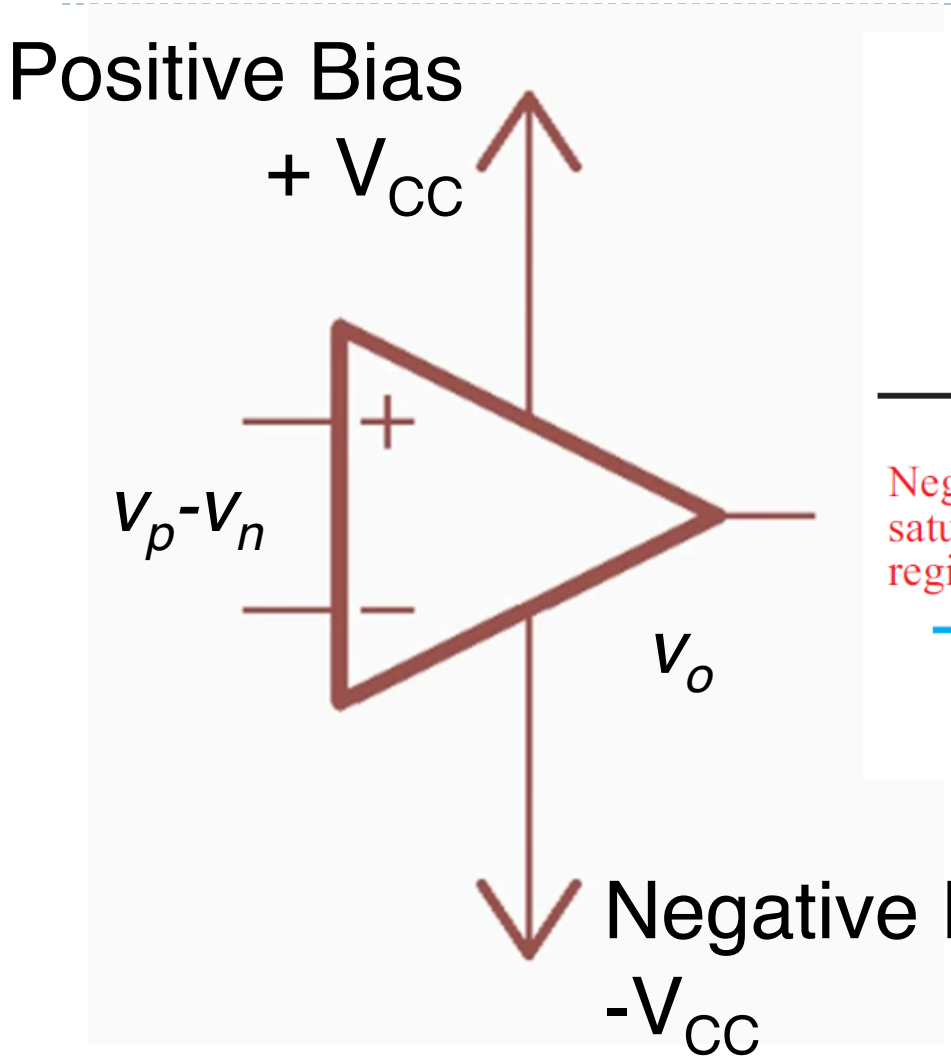

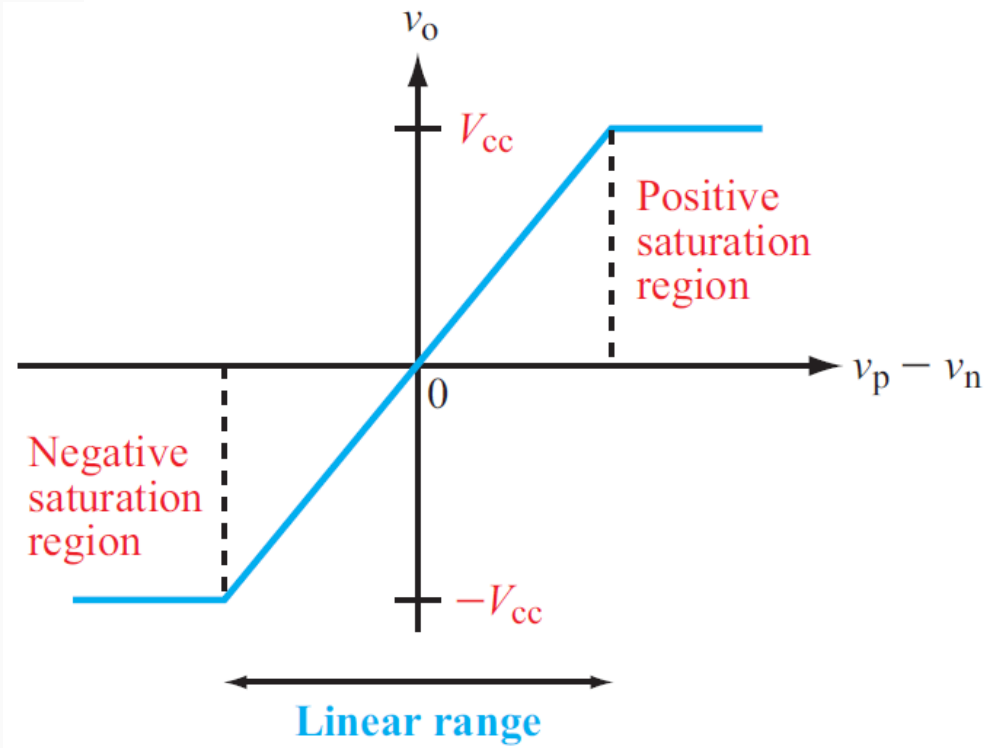

The importance of bias

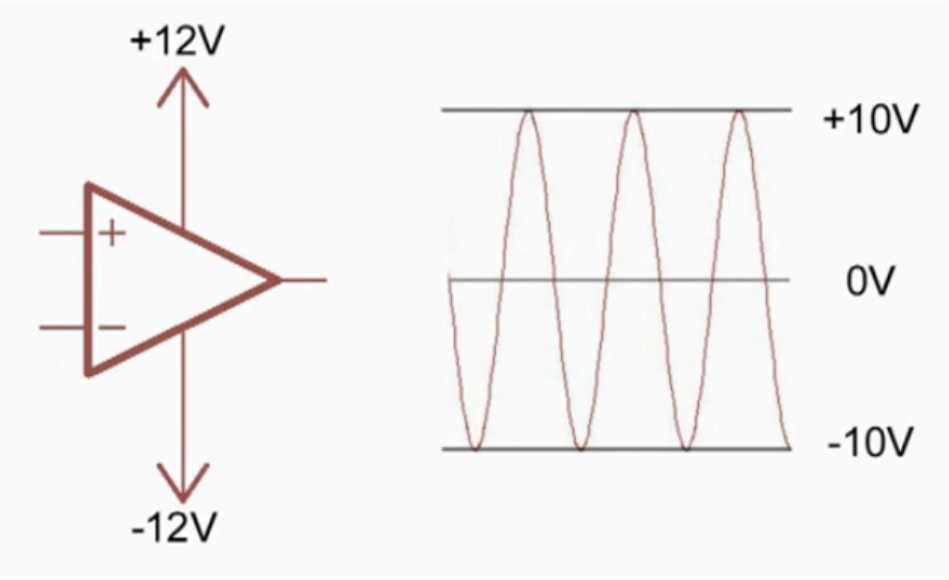

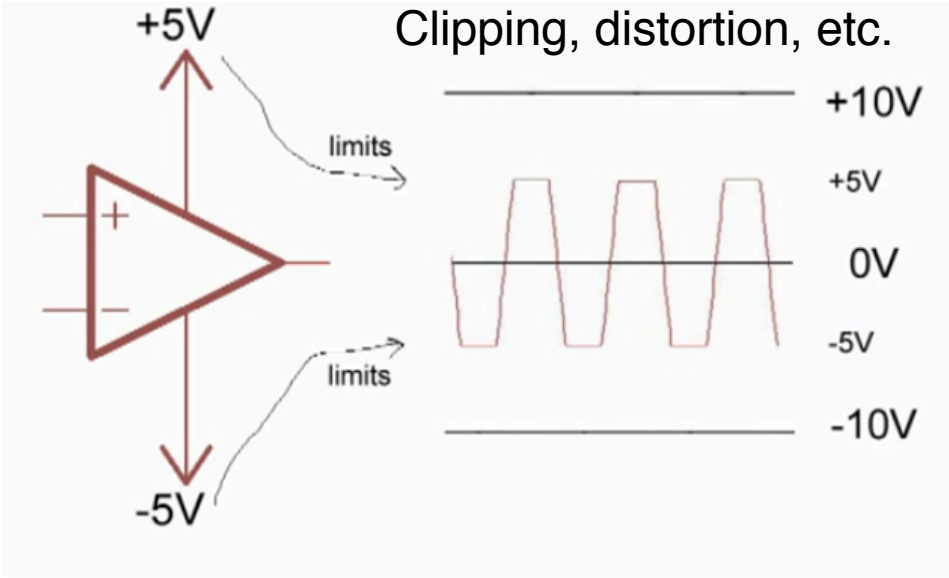

If bias is not chosen properly (i.e., Gain * Input signal > Bias), clipping can occur!

⇒ BAD amplifier ☹, but

⇒ GOOD comparator – a device that compares two analog voltages and provides a digital signal at the output (used in Arduino as well)

Using the op-amp as a *comparator*

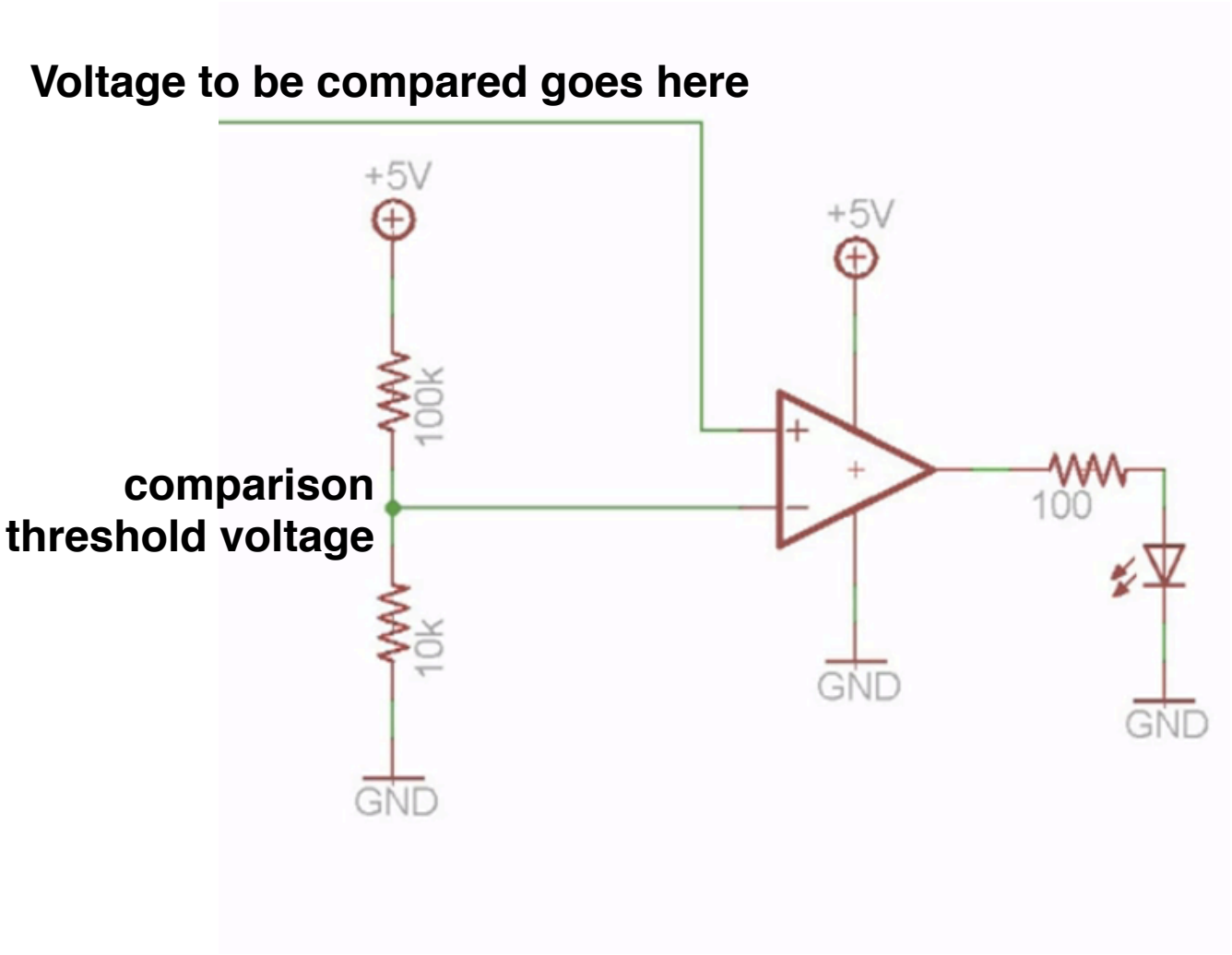

Operational Amplifier "op-amp" summary

Important Characteristics:

- **One output terminal (V_o)**
  - Behaves as an ideal voltage source (i.e., no output resistance)
- **Two input terminals:**
  - positive (non-inverting): if V_+ increases V_o **increases**
  - negative (inverting): if V_- increases V_o **decreases**
  - $V_{in}=V_+-V_-$
  - Input resistance between + and – terminal is extremely large!
- **Needs power supply**
  - Often not shown in ES 50 circuits

Op-amp showing power supply rails

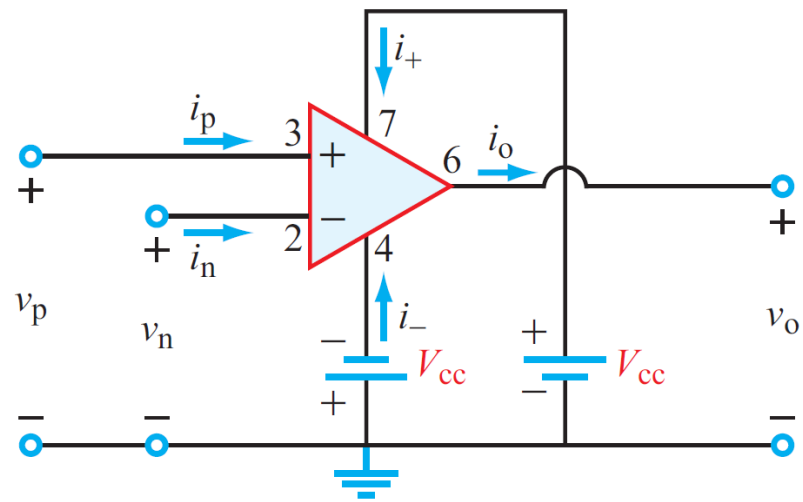

Op Amp with power supply rails **not** shown
(how we usually show op-amps in ES 50)

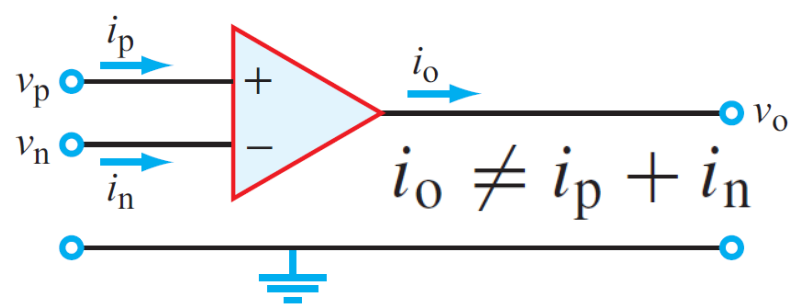

Example: Let's build an amplifier that picks up a heart beat and turns it into sound or flashing light

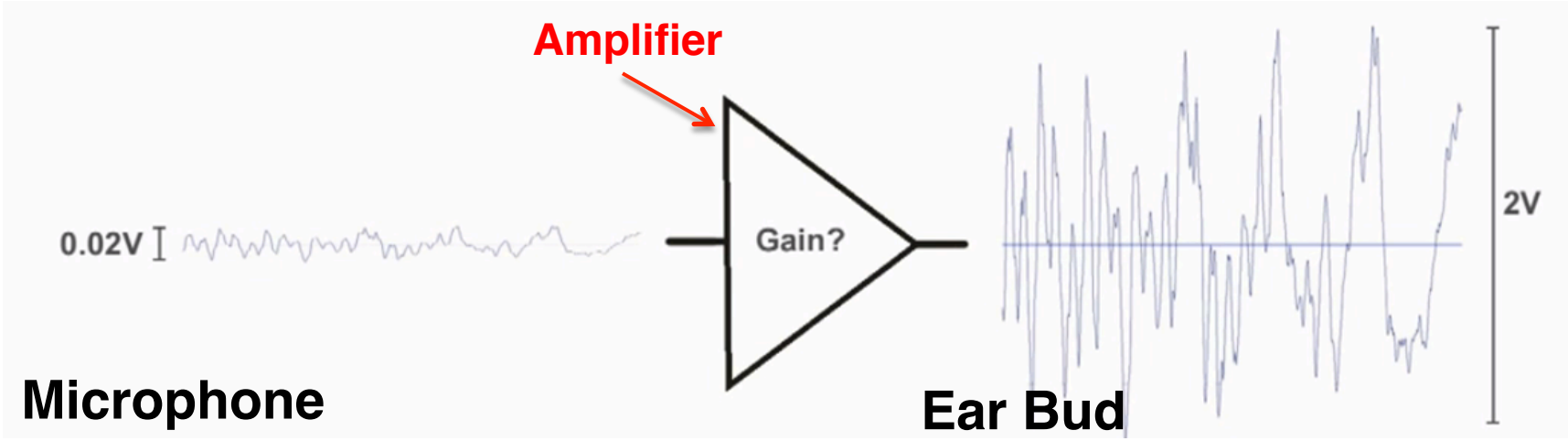

We need a gain of ~100, but the op-amp has a gain of $A=10^6$.
What do we do?

Negative Feedback is used to control the gain

- Feedback: Return some of the output to the input

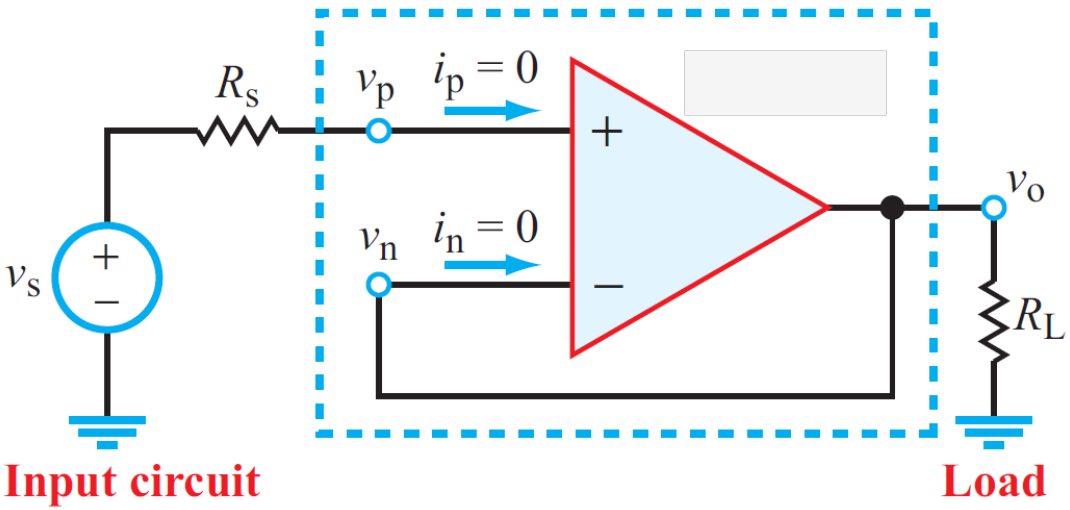

- $v_n = v_o$ (shorted)

Op-Amp Golden rules:

- $i_p = 0$ ➔ No voltage drop across R_S ➔ $v_p = v_S$
- $v_o = A * (v_p - v_n)$

then…

$$v_o = A(v_s - v_o)$$

$$v_o(1 + A) = Av_s$$

$$\boxed{v_o = v_s \frac{A}{1 + A}}$$

As A → ∞ we get the following approximation:

$$\boxed{v_o \approx v_s}$$

Negative Feedback is used to control the gain

- Feedback: Return some of the output to the input

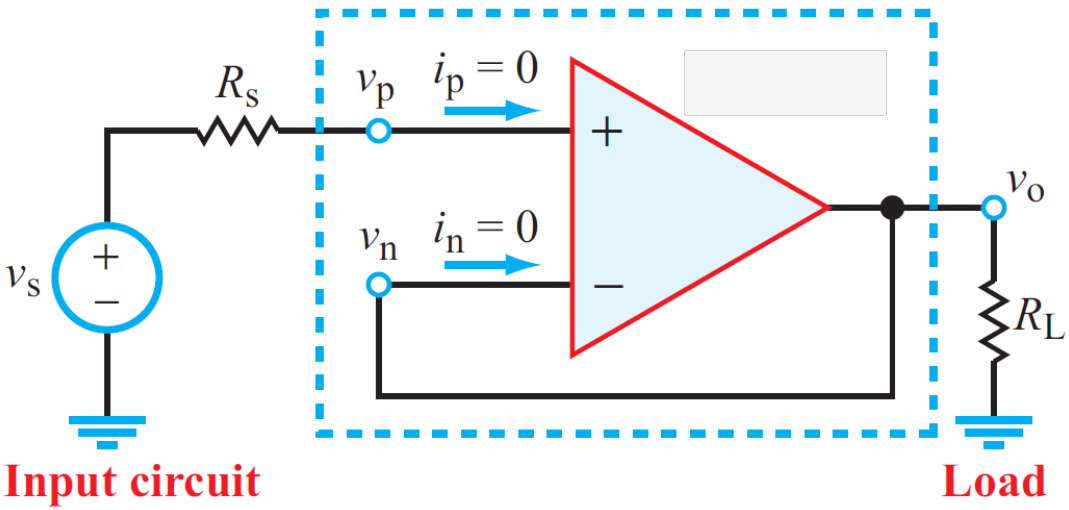

- **What about v_{in}?**

$$\begin{aligned} v_{in} &= v_p - v_n \\ &= v_s - v_o \\ &= v_s - v_s \frac{A}{1+A} \end{aligned}$$

As A → ∞ we get the following approximation:

$$\boxed{v_{in} \approx 0 \quad \Rightarrow \quad v_p = v_n}$$

$$\boxed{v_{in} = v_s \frac{1}{1+A}}$$

Negative Feedback is used to control the gain

- Feedback: Return some of the output to the input

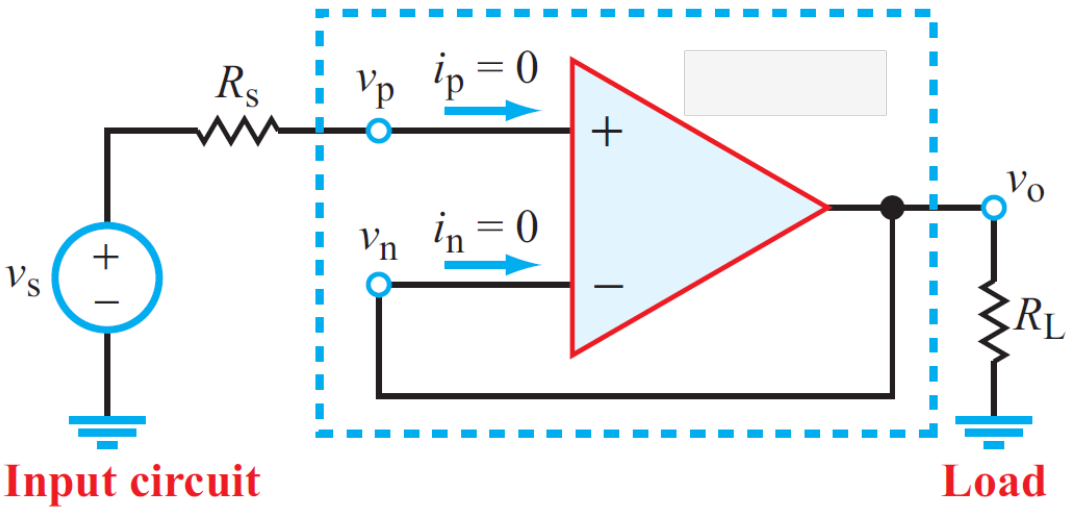

As A → ∞ we get the following approximation:

$$v_o = v_s$$

Also called a unity-gain buffer or voltage follower

$$v_p = v_n$$

Important property when solving op-amp circuits

What is going on?
Intuitively… how does this work?

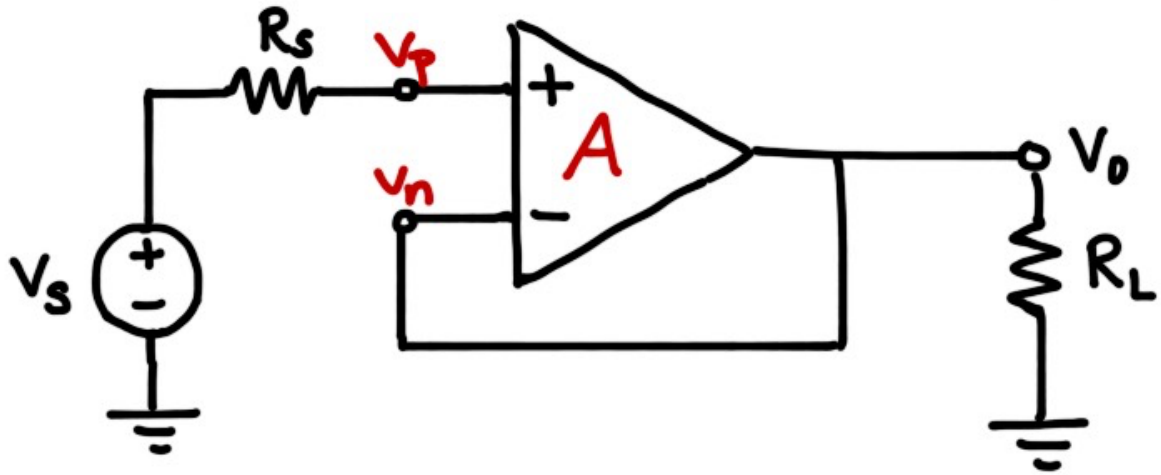

- To understand what is going on, let's go around the loop.
  - Assume v_s starts out at 0V (hence, v_o is also 0V) and increases by ΔV.
  - Then, v_p-v_n increases by ΔV and the amplifier wants to drive v_o to A*ΔV, because $v_o = A*(v_p-v_n)$.
  - However, since v_o is connected to v_n (via feedback), v_n (=v_o) approaches v_p until the difference is $\Delta V/A$. Hence, called a voltage follower.
- This is an example of **negative** feedback.

What happens if we flip the inputs?

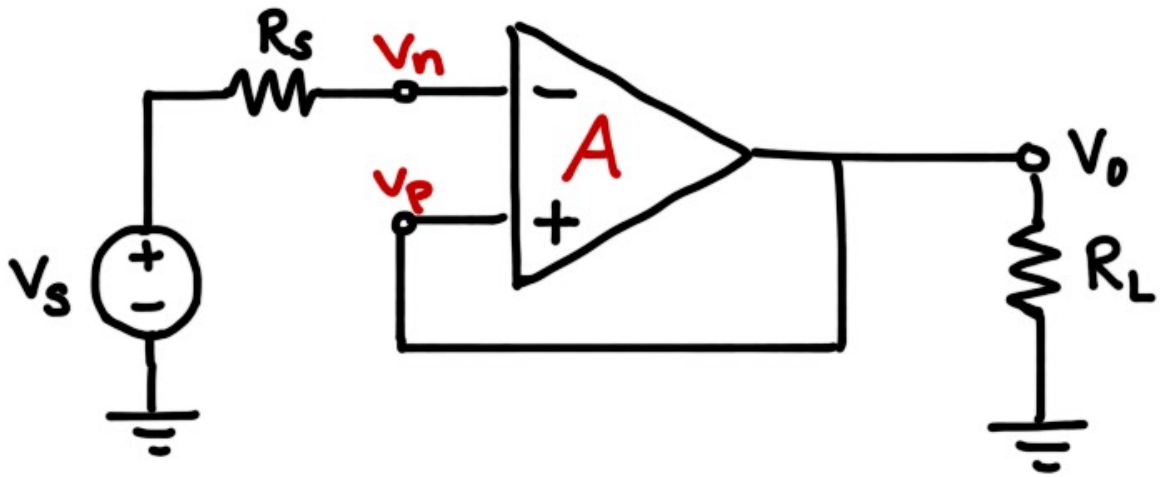

- Let's go around the loop again…
  - Again assume v_s increases from 0V to ΔV.
  - Then, v_p-v_n will go negative (-ΔV) and the amplifier wants to drive v_o towards -A*ΔV.
  - Since $v_p = v_o$, v_p-v_n then becomes -A*ΔV–ΔV, causing the amplifier to drive v_o further negative.
  - v_o goes more and more negative until the output saturates at lower voltage rail -V_{CC} (or +V_{CC} if ΔV was negative).
- This is an example of **positive** feedback. Bad for amplifiers, but good for oscillators.

Voltage Follower: Simple Feedback Circuit

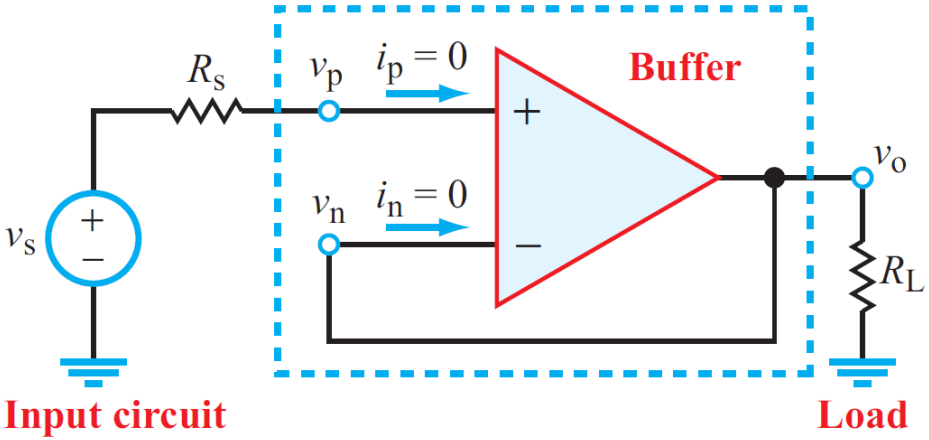

$v_o = v_n = v_p = v_s$ ➔ output follows input

Closed-loop gain: $G = \dfrac{v_o}{v_s} \approx 1$

This circuit takes open-loop gain (A) of 10^6 and provides closed-loop gain (G) of ≈1.

But, how do we get G=100?

Q: How's this different from the simple circuit to the left?
Q: What is the role of an op-amp?

How can we get gain > 1?

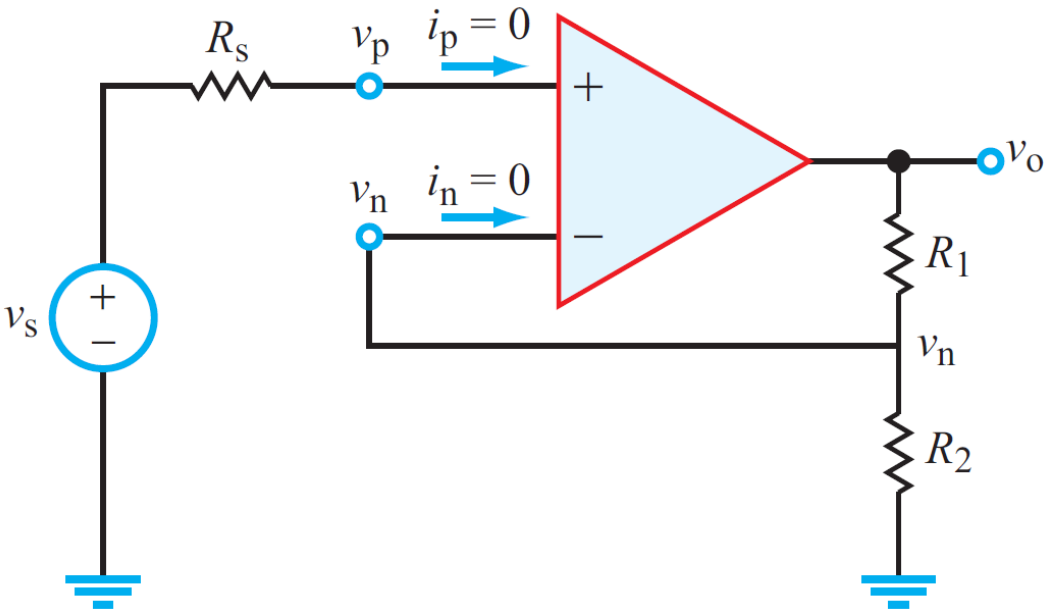

$$v_p = v_s$$

$$v_n = v_o \frac{R_2}{R_1 + R_2}$$

$$v_p = v_n$$

$$v_s = v_o \frac{R_2}{R_1 + R_2}$$

$$v_o = v_s \frac{R_1 + R_2}{R_2}$$

To get **closed-loop gain** G = 100:

- $R_1 = 99 * R_2$
- Let $R_1 = 100k\Omega \rightarrow R_2 = 1k\Omega$
  (sensitive to accurate resistor values)

$$\boxed{G = \frac{v_o}{v_s} = \frac{R_1 + R_2}{R_2}}$$

Can find G using the node voltage method

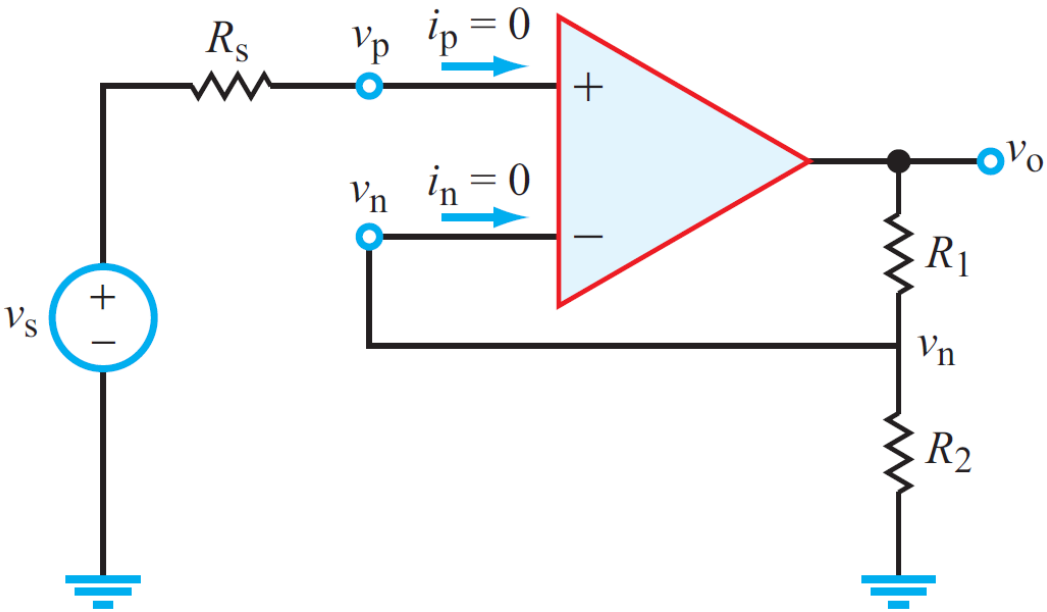

Recall node voltage method:
Pick nodes w/ unknown voltage and compute KCL

At node v_n:

$$\frac{v_o - v_n}{R_1} = \frac{v_n}{R_2} + i_n$$

$$\frac{v_o}{R_1} = v_n\left(\frac{1}{R_1} + \frac{1}{R_2}\right)$$

$$v_o = v_n \frac{R_1 + R_2}{R_2}$$

At node v_p:

$$v_p = v_s$$ b/c $i_p = 0$

$$v_p = v_n$$ b/c $A = \infty$

$$G = \frac{v_o}{v_s} = \frac{R_1 + R_2}{R_2}$$

Again, what's going on intuitively?

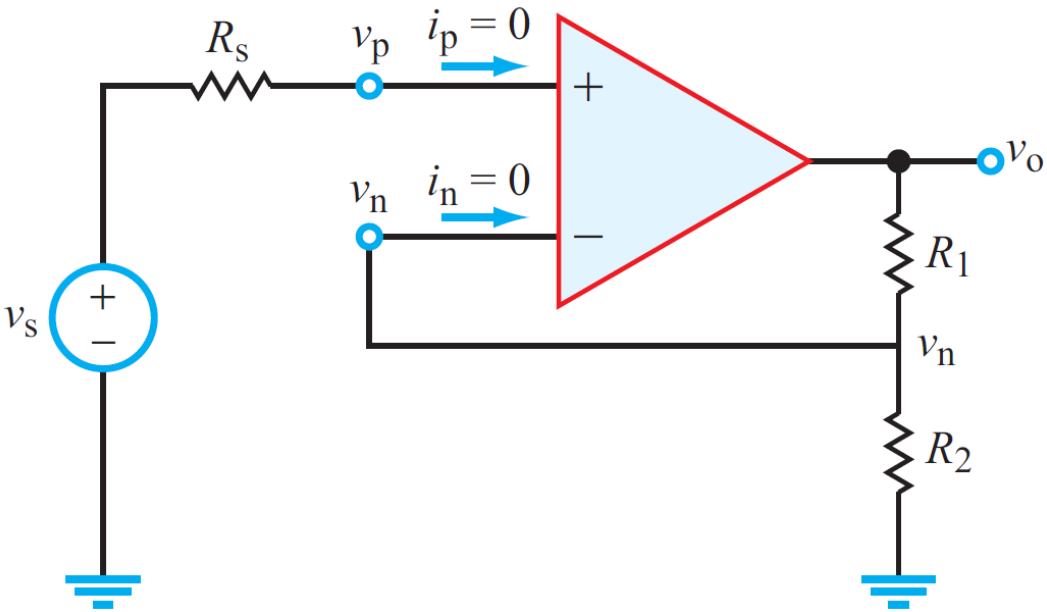

- Let's go around the loop one more time.
  - Assume v_s starts at 0V (v_o also at 0V) and increases by ΔV.
  - v_p-v_n will increase by ΔV and cause the amplifier to drive v_o towards A*ΔV and v_n towards A*ΔV*(R_2/ (R_1+R_2)).
  - But with negative feedback, we get v_o/v_s = (R_1+R_2) / R_2.

And here is our heart-rate indicator ☺

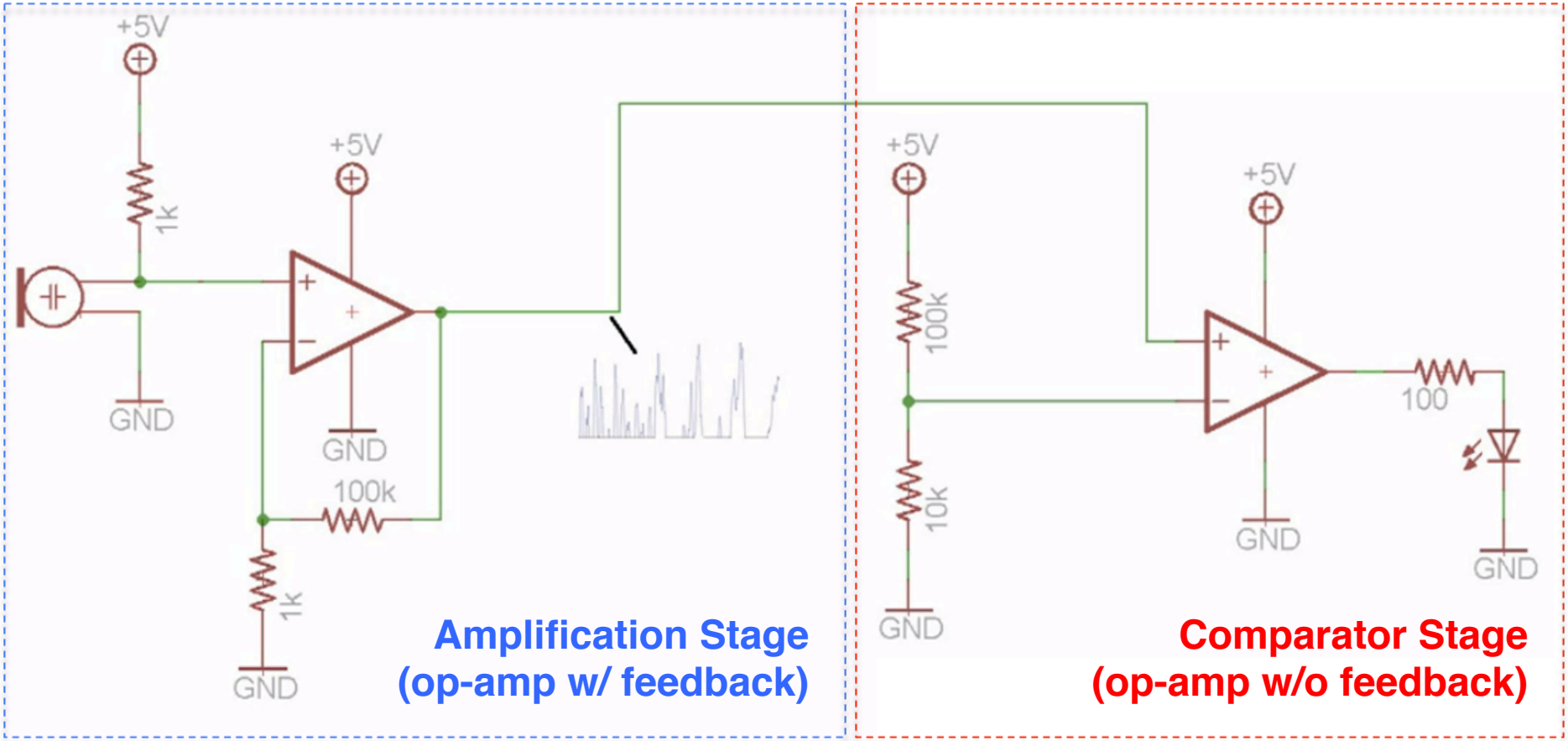

The same circuit can work as a clap-detector: http://www.youtube.com/watch?v=y0Q0ERSP24A
(also a very nice tutorial on op-amps!)
Music beat sensor: http://www.youtube.com/watch?v=OTwg2Eal8x4
Or, turn it into an Arduino-based heart rate monitor: http://www.youtube.com/watch?v=5ekHuCT2a1M

Another very common topology: *Inverting* Amplifier

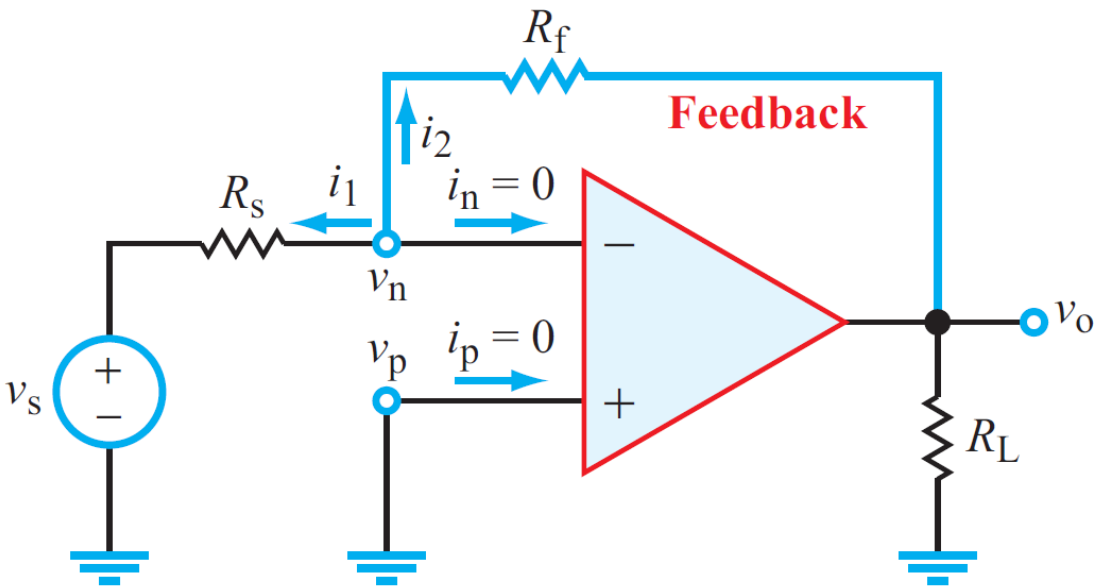

KCL at node v_n:

$$\frac{v_n - v_s}{R_s} + \frac{v_n - v_o}{R_f} + i_n = 0$$

$$v_n = v_p = 0$$

$$\frac{v_s}{R_s} + \frac{v_o}{R_f} = 0$$

$$\boxed{G = \frac{v_o}{v_s} = -\frac{R_f}{R_s}}$$

Notice: Input, $\boldsymbol{v_s}$, connected to the ***inverting*** input of the op-amp

Inverting amplifier topology:
Negative closed-loop gain

Summing Amplifier

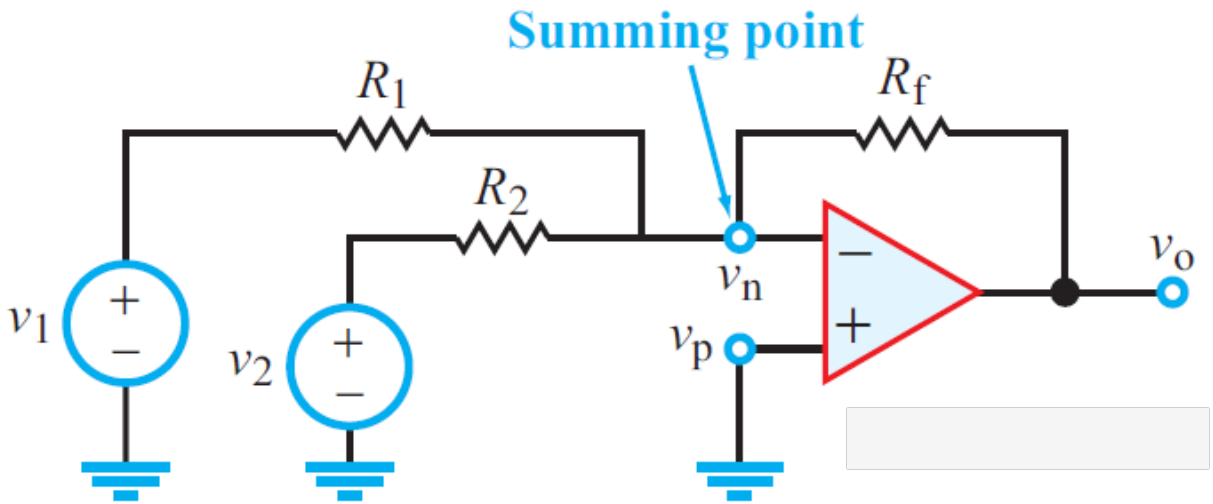

KCL at node v_n:

$$-\frac{v_o - v_n}{R_f} = \frac{v_1 - v_n}{R_1} + \frac{v_2 - v_n}{R_2}$$

$$-\frac{v_o}{R_f} = \frac{v_1}{R_1} + \frac{v_2}{R_2}$$

$$\boxed{v_o = -\left(\frac{R_f}{R_1}v_1 + \frac{R_f}{R_2}v_2\right)}$$

We could have also used superposition

Application of summing amplifier: **Music Mixer** (any DJs around?)

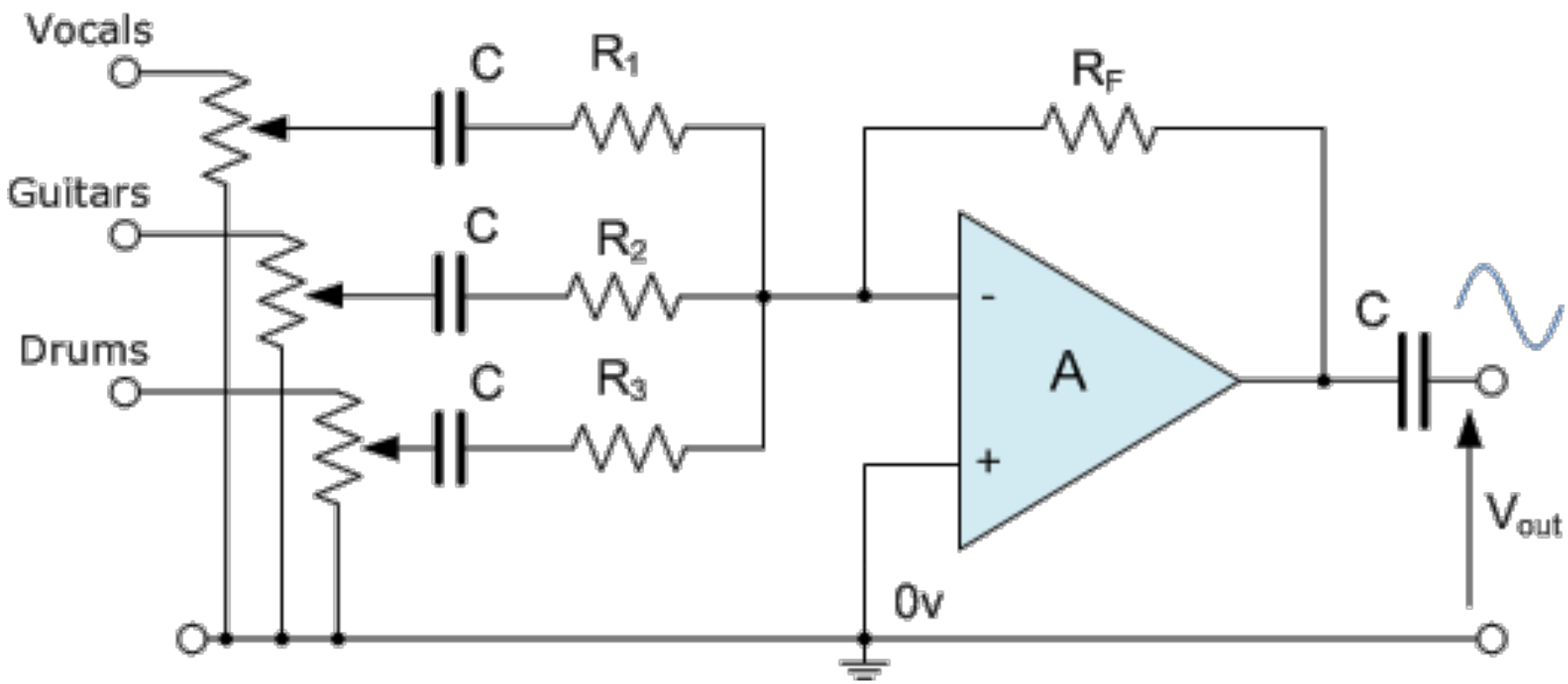

RC circuits are often used for filtering. Here, amplifier A amplifies a combination of the three incoming signals. Relative amplitudes set via potentiometers (voltage dividers).

Difference Amplifier – Details in HW

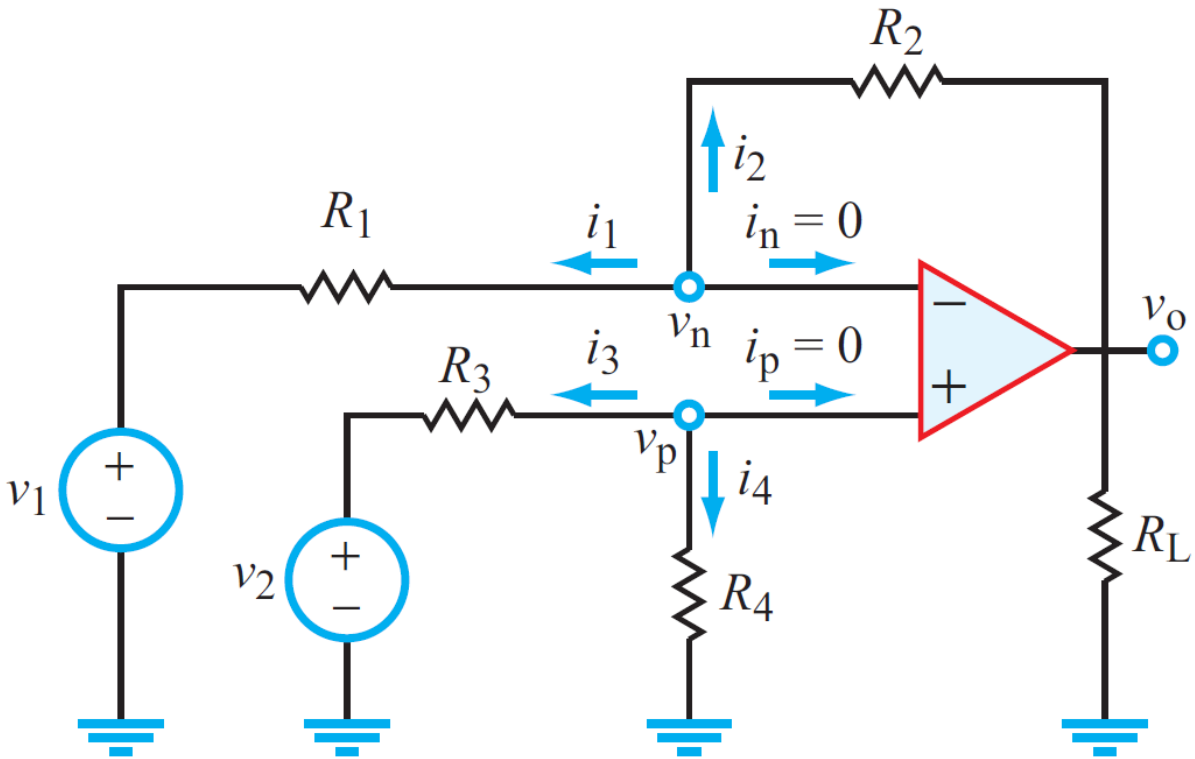

$$v_o = \left[\left(\frac{R_4}{R_3 + R_4}\right)\left(\frac{R_1 + R_2}{R_1}\right)\right] v_2 - \left(\frac{R_2}{R_1}\right) v_1,$$

Table 4-3: Summary of op-amp circuits.

Op-Amp Circuit	Block Diagram
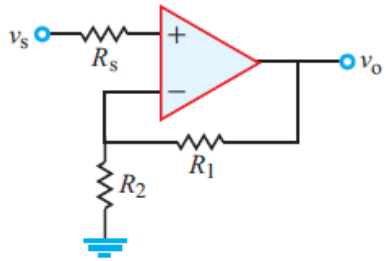	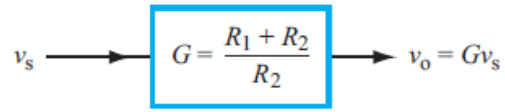 **Noninverting Amp** (v_o independent of R_s)
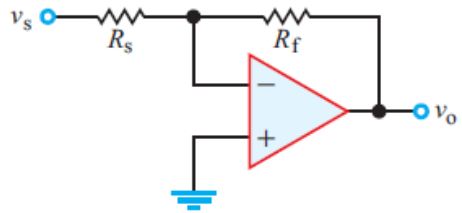	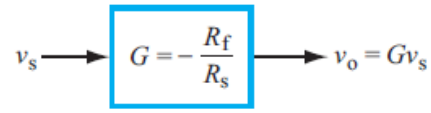 **Inverting Amp**
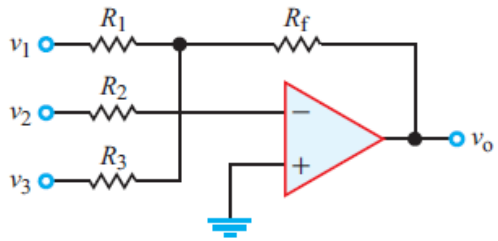	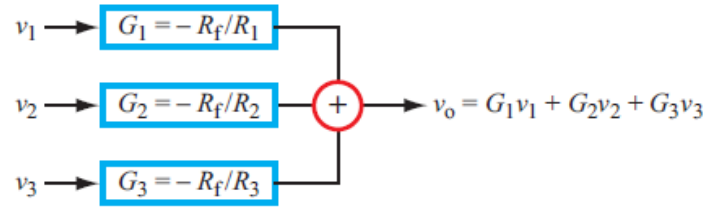 **Inverting Summer**
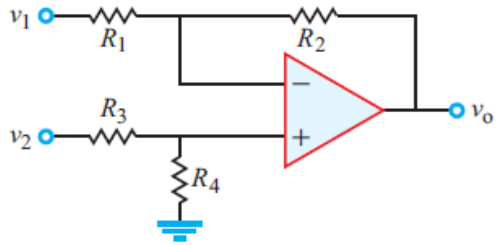	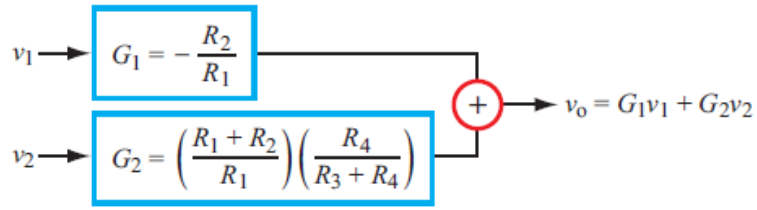 **Subtracting Amp**
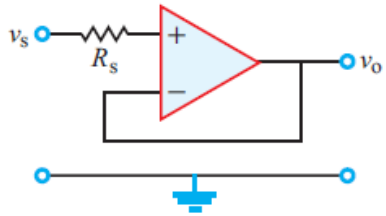	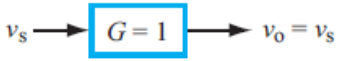 **Voltage Follower** (v_o independent of R_s)