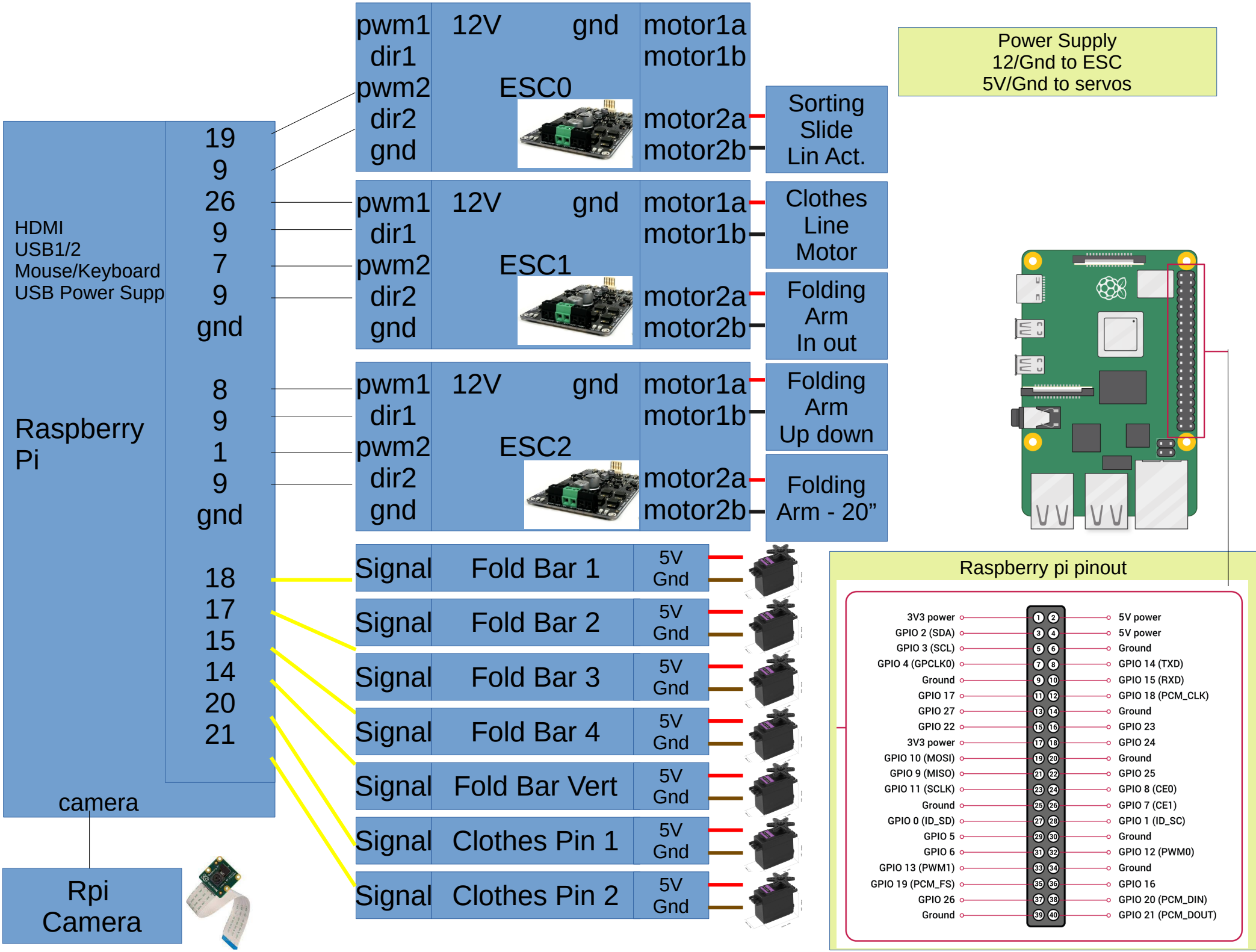
Power Supply
12/Gnd to ESC
5V/Gnd to servos
Raspberry Pi
HDMI
USB1/2
Mouse/Keyboard
USB Power Supp
19
9
26
9
7
9
gnd
8
9
1
9
gnd
18
17
15
14
20
21
camera
Rpi Camera
pwm1
dir1
pwm2
dir2
gnd
12V
gnd
ESC0
motor1a
motor1b
motor2a
motor2b
Sorting Slide Lin Act.
ESC1
Clothes Line Motor
Folding Arm In out
ESC2
Folding Arm Up down
Folding Arm - 20”
Signal
Fold Bar 1
Fold Bar 2
Fold Bar 3
Fold Bar 4
Fold Bar Vert
Clothes Pin 1
Clothes Pin 2
5V
Gnd
Raspberry pi pinout
3V3 power
GPIO 2 (SDA)
GPIO 3 (SCL)
GPIO 4 (GPCLK0)
Ground
GPIO 17
GPIO 27
GPIO 22
3V3 power
GPIO 10 (MOSI)
GPIO 9 (MISO)
GPIO 11 (SCLK)
Ground
GPIO 0 (ID_SD)
GPIO 5
GPIO 6
GPIO 13 (PWM1)
GPIO 19 (PCM_FS)
GPIO 26
Ground
5V power
5V power
Ground
GPIO 14 (TXD)
GPIO 15 (RXD)
GPIO 18 (PCM_CLK)
Ground
GPIO 23
GPIO 24
Ground
GPIO 25
GPIO 8 (CE0)
GPIO 7 (CE1)
GPIO 1 (ID_SC)
Ground
GPIO 12 (PWM0)
Ground
GPIO 16
GPIO 20 (PCM_DIN)
GPIO 21 (PCM_DOUT)

Part	Number	Total Price	Link
Linear actuator	4	150	https://www.amazon.com/VEVOR-Actuator-Mounting-Bracket-Protection/dp/B0CWN59XYC 30 inch, 2x12 inch (or 2x20), 1x6 inch
Worm Gear Motor	1	$26	https://www.amazon.com/BRINGSMART-70kg-cm-Self-locking-Reversed-Rotating/dp/B07F8TGB9L
Servo motor 180 degrees	7	$35	https://www.amazon.com/gp/product/B08CH2SJLR/
Cytron ESC 10A dual motor	3	$69	https://www.amazon.com/gp/product/B07CW34YRB/
Sd micro	1	$7	https://www.amazon.com/SanDisk-2-Pack-microSDHC-Memory-2x32GB/dp/B08J4HJ98L
Raspberry pi zero 2 w	1	$16	https://www.adafruit.com/product/3708
Raspberry pi camera	1	$25	https://www.adafruit.com/product/5657
Raspberry pi camera cable	1	$2.50	https://www.adafruit.com/product/5820
18 gauge copper	100 ft	$20	Local hardware store, doorbell wire
wire/Extras	?	$10	https://www.amazon.com/Elegoo-EL-CP-004-Multicolored-Breadboard-arduino/dp/B01EV70C78
2”x2”x8’ wood	6	$15	Local hardware store
Screws, wire nuts, hinges x2, 2’x4x plywood, 3d printer filament		~$20	Local hardware store/amazon
Power Supply	1	$21	https://www.amazon.com/gp/product/B07X1LBK19

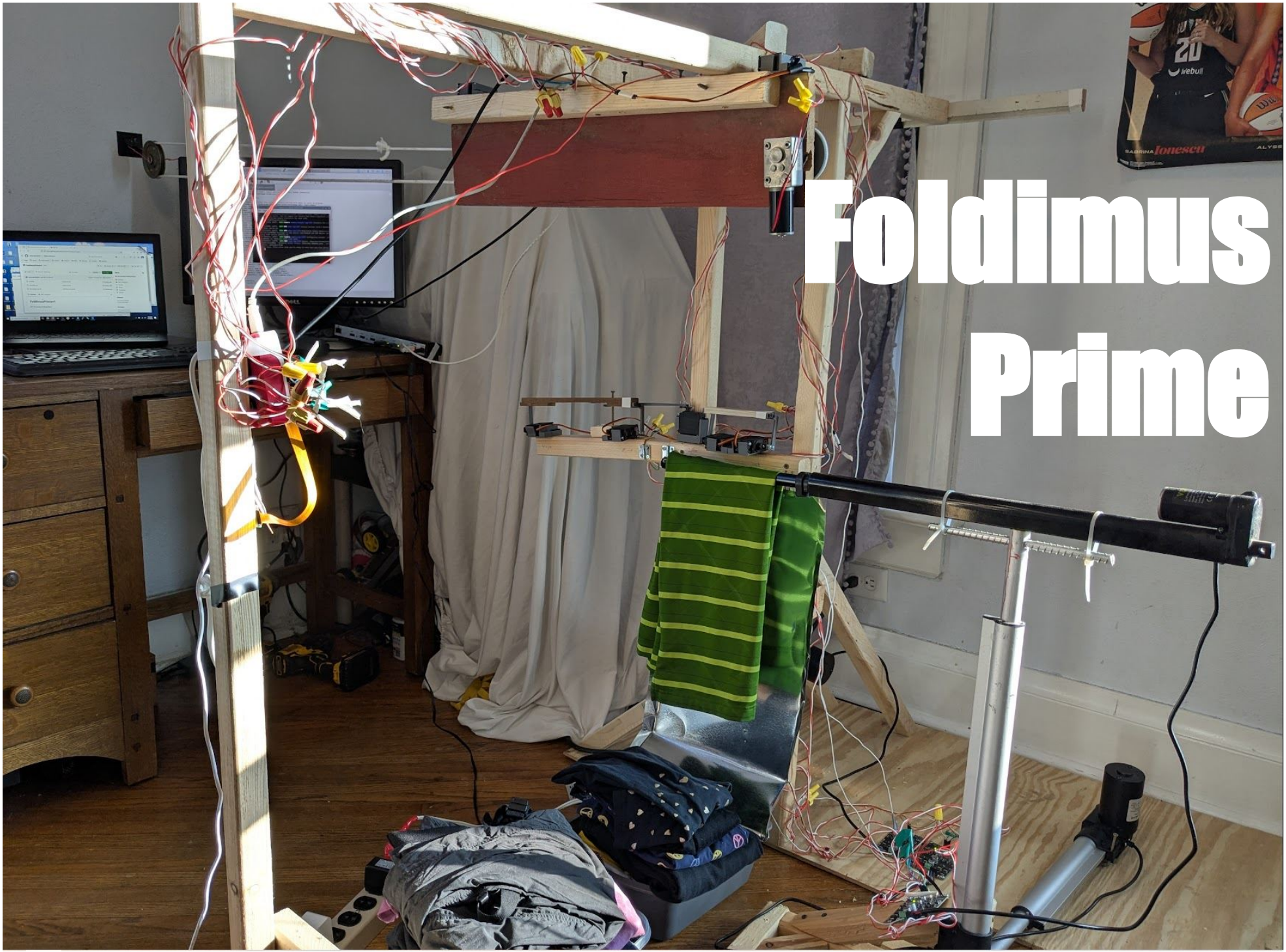
Foldimus
Prime