Wiring Schematic

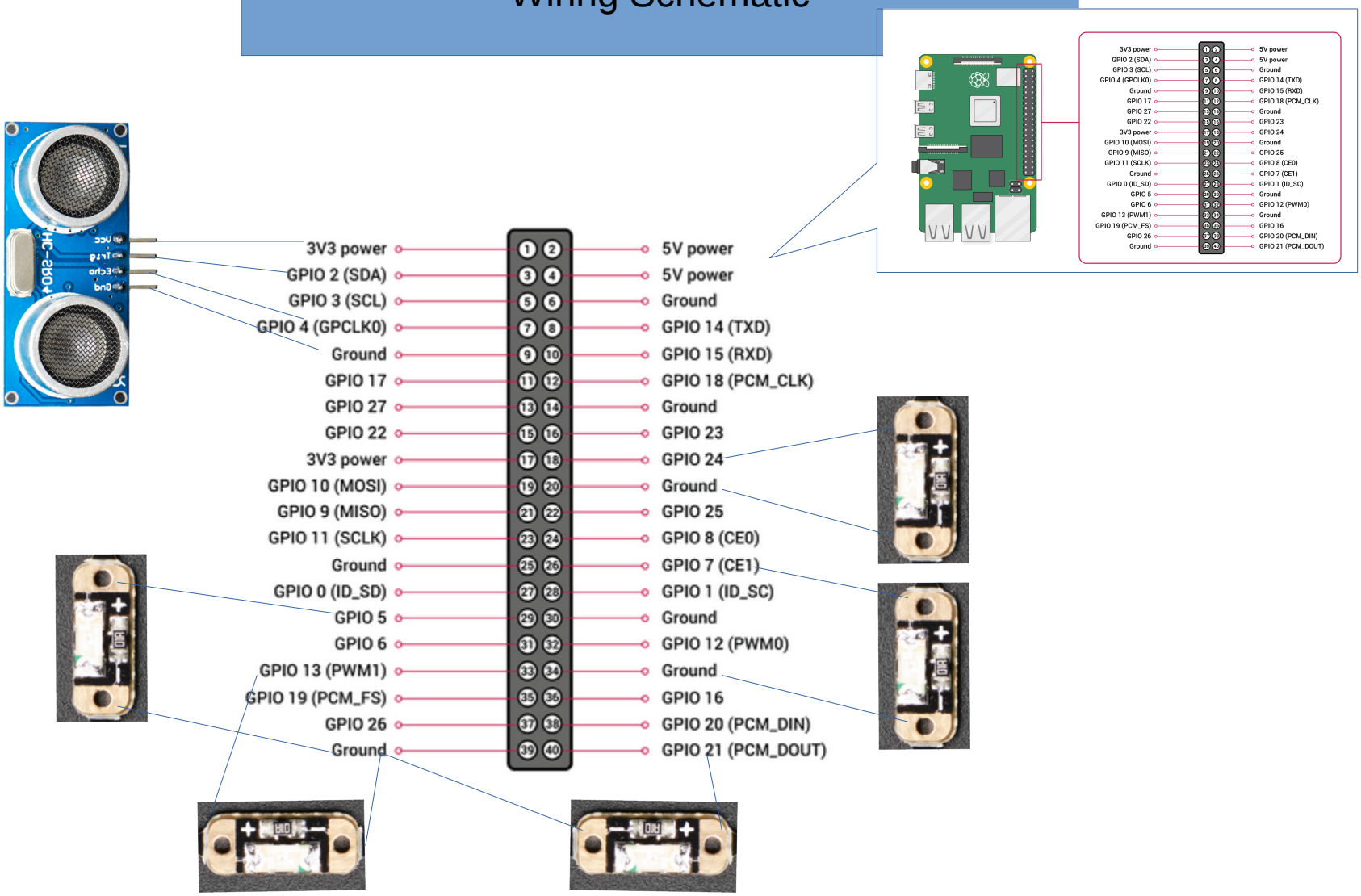

Thumbnail

DIY AI Joking Ghost
Raspberry Pi 5, listens/talks/tells jokes
Perfect greeting for trick-or-treaters