Thumbnail

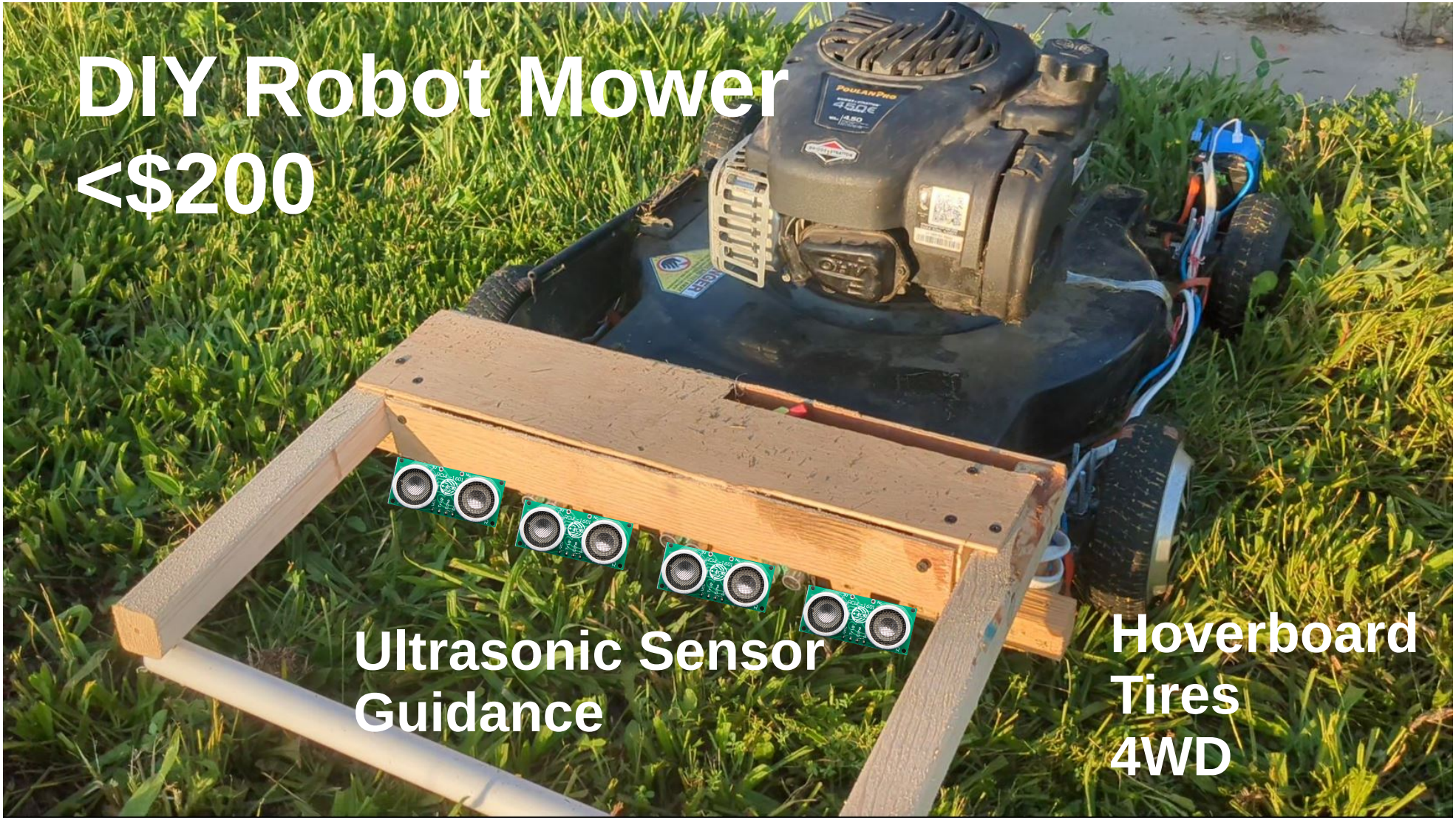
DIY Robot Mower
<$200
Ultrasonic Sensor
Guidance
Hoverboard
Tires
4WD

Electrical – Power System

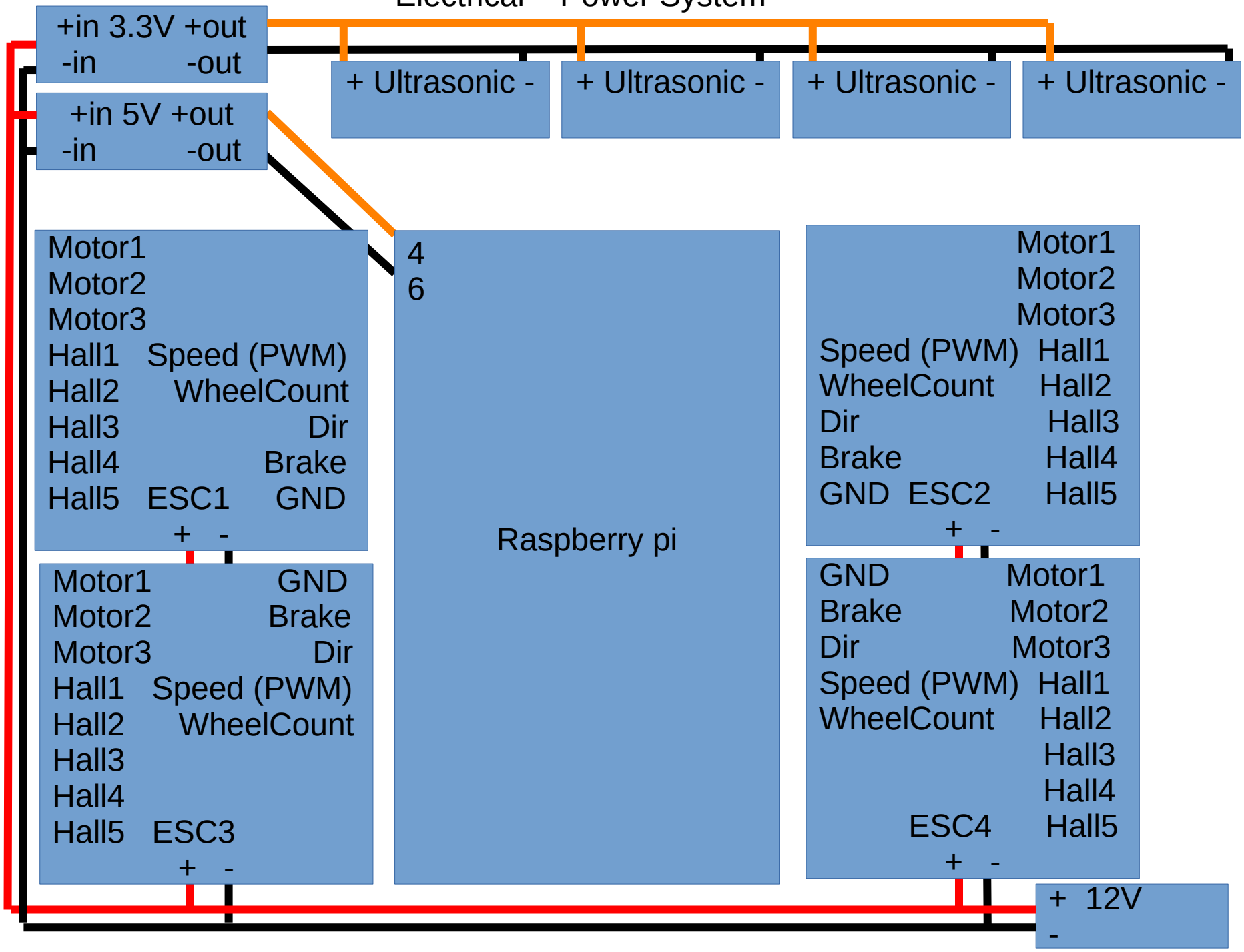

Electrical – ESC/Wheel wiring – 1 ESC Detail

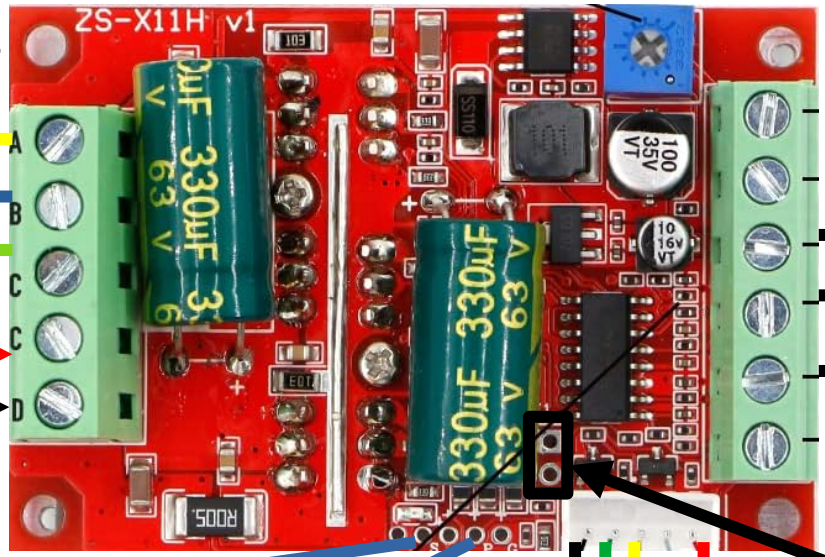

Wheel

Motor power
18 gauge
Copper
(thick wires)

12V Battery

12v

Gnd

To Raspberry Pi

GND

Dir

Brake

J1 header - short these 2 vias (holes in board) together so that riorand board will accept pwm speed inputs from raspberry pi

2nd via from left:
To Raspberry pi
Counts wheel rotations
45 rising edges/1 rotation

4th via from left:
To Raspberry pi
PWM speed input from pi

Wheel

Hall effect wires (thin). Note color change. For right side: Wheel wire blue, connects to yellow on riorand. Wheel yellow wire connects to white on riorand. On left side wheels blue/yellow hall wires from wheel are swapped as well as blue/green motor wires to make motors spin correct dir.

For rear wheels, solder in ethernet cables with ends snipped off. Ethernet cables have twisted pair, so you can solder gnd with each signal wire in twisted pair to reduce interference over distance to rear wheel

ESC/Wheel Wiring

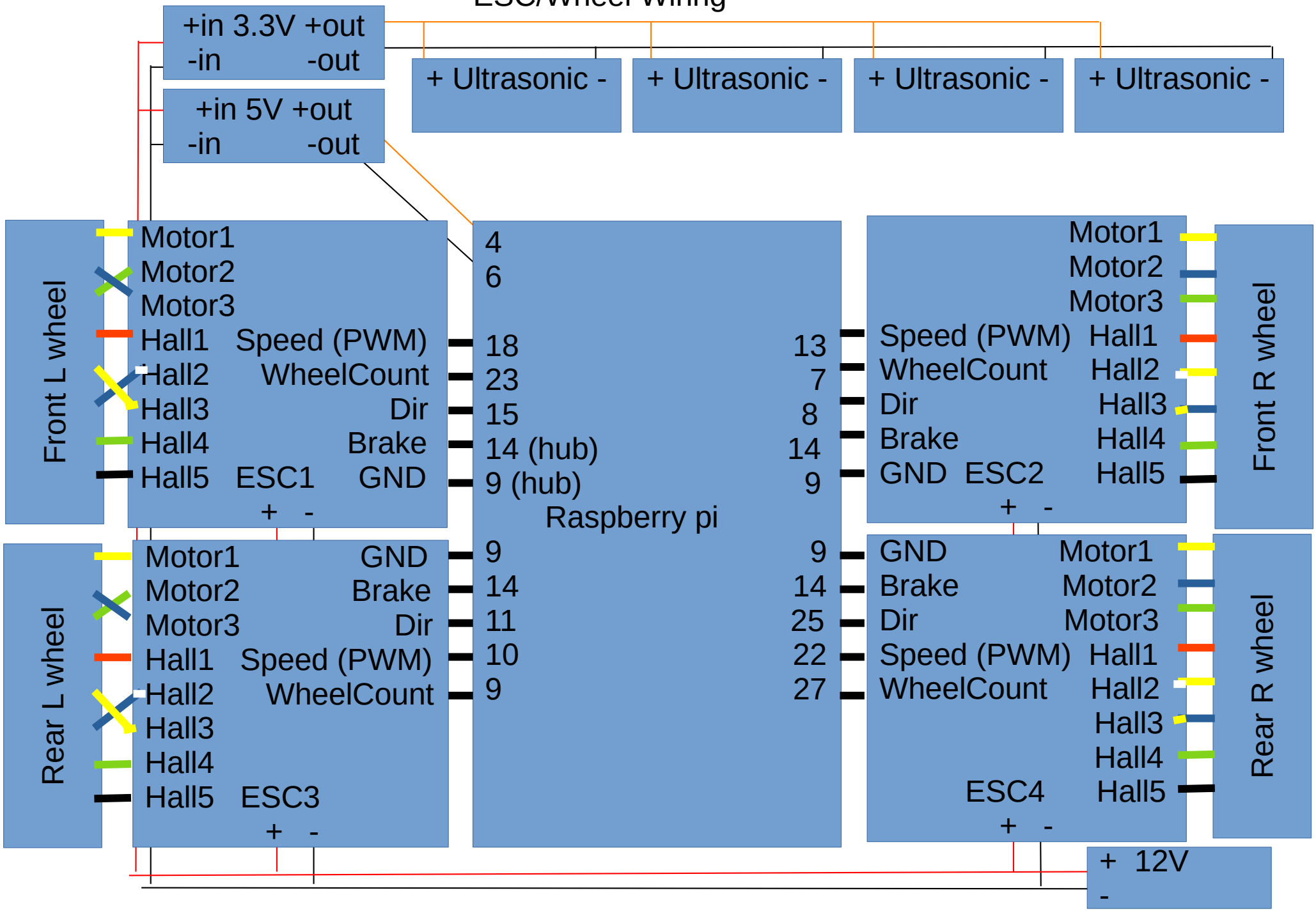

Electrical – Sensor Wiring – 1 sensor detail

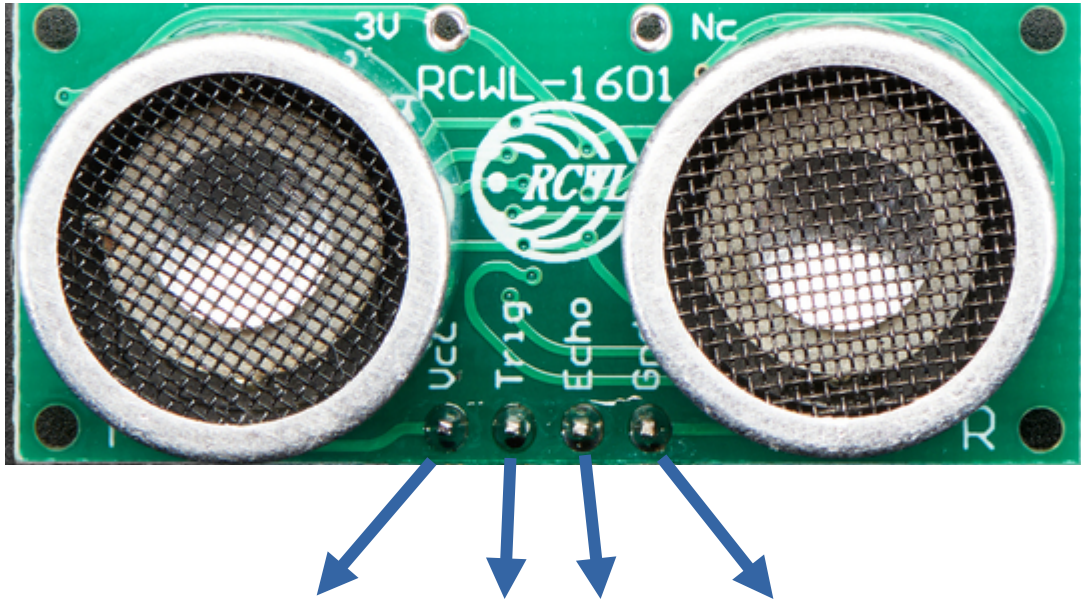

3.3V | To Raspberry Pi | GND

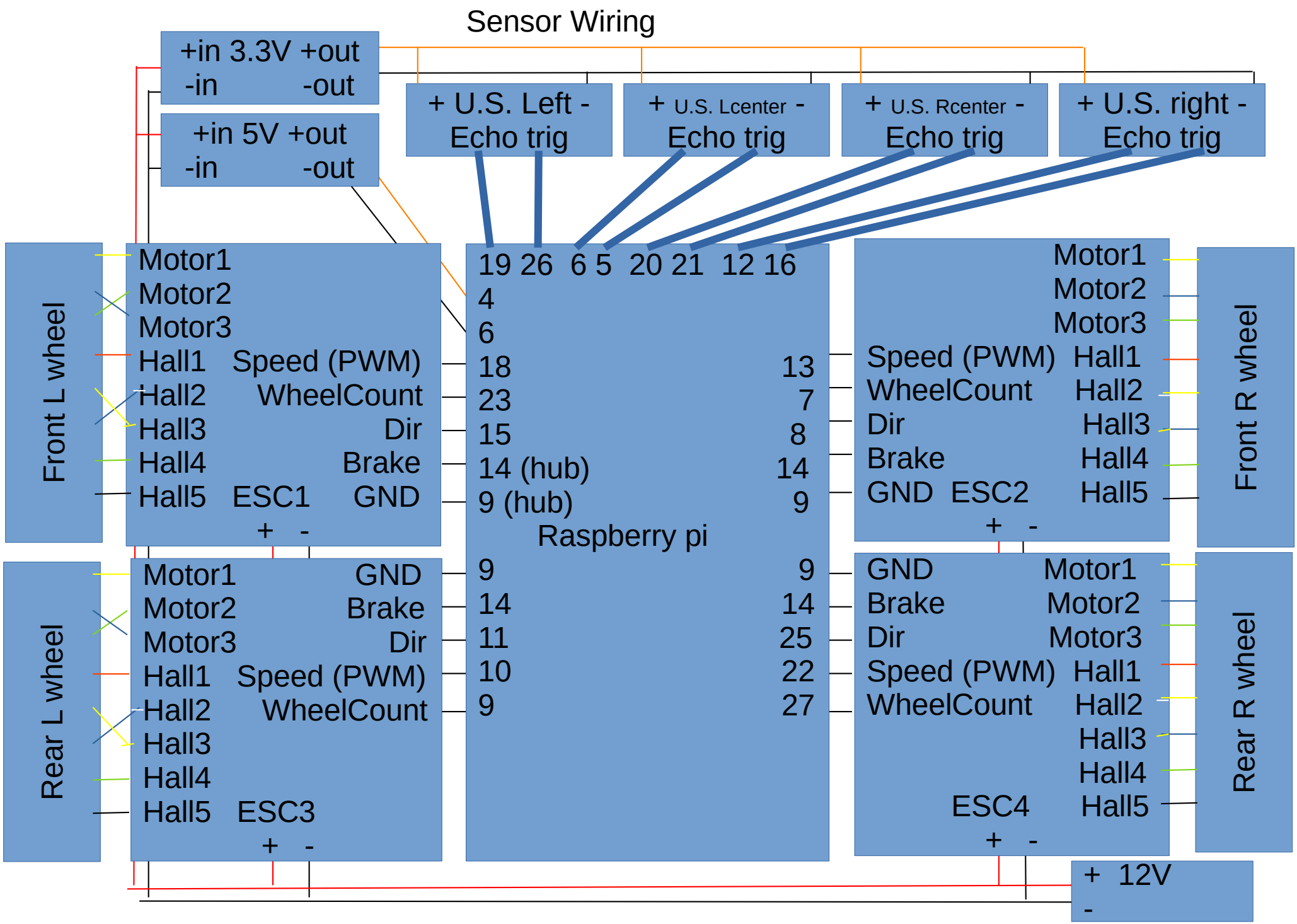
Sensor Wiring
+in 3.3V +out
-in -out
+in 5V +out
-in -out
+ U.S. Left -
Echo trig
+ U.S. Lcenter -
Echo trig
+ U.S. Rcenter -
Echo trig
+ U.S. right -
Echo trig
Front L wheel
Motor1
Motor2
Motor3
Hall1 Speed (PWM)
Hall2 WheelCount
Hall3 Dir
Hall4 Brake
Hall5 ESC1 GND
+ -
Rear L wheel
Motor1 GND
Motor2 Brake
Motor3 Dir
Hall1 Speed (PWM)
Hall2 WheelCount
Hall3
Hall4
Hall5 ESC3
+ -
19 26 6 5 20 21 12 16
4
6
18
23
15
14 (hub)
9 (hub)
Raspberry pi
9
14
11
10
9
13
7
8
14
9
9
14
25
22
27
Motor1
Motor2
Motor3
Speed (PWM) Hall1
WheelCount Hall2
Dir Hall3
Brake Hall4
GND ESC2 Hall5
+ -
Front R wheel
GND Motor1
Brake Motor2
Dir Motor3
Speed (PWM) Hall1
WheelCount Hall2
Hall3
Hall4
ESC4 Hall5
+ -
Rear R wheel
+ 12V
-

Wifi: mower
Password: LetsMower
Webpage: http://mower.local

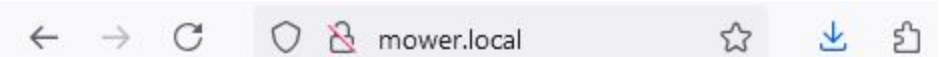

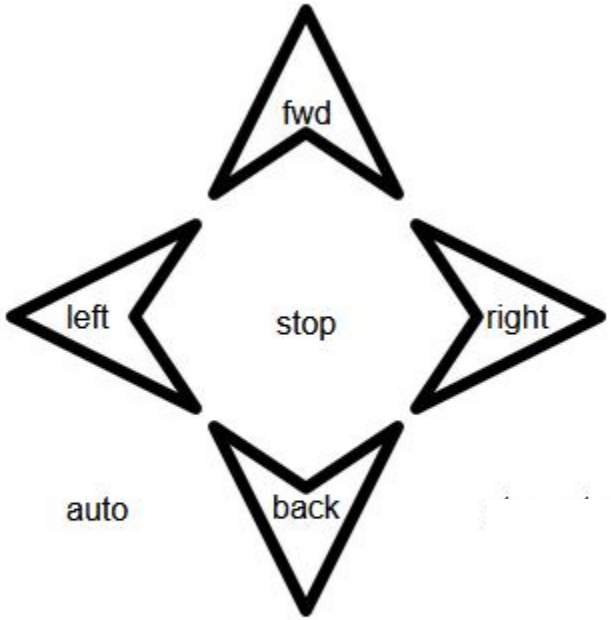

Manual Controls

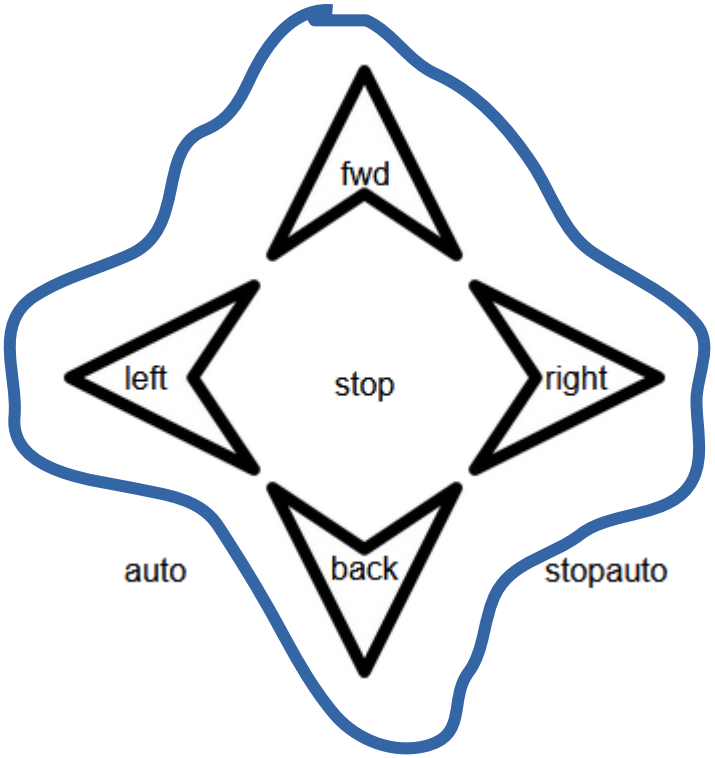

Auto Controls

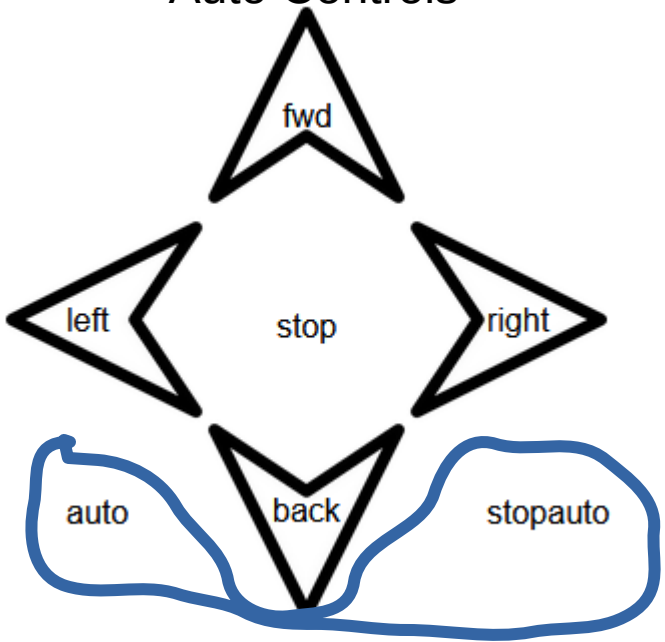

Sensor bar – side view

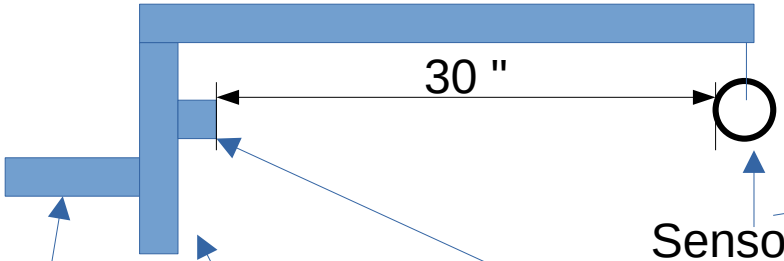

Sensor Reflection Cylinder

Connection To metal frame

Height Adjust Bar

Electronics bar – contains ESC/Pi/Sensors Screw in at proper height for sensors to line up with cut grass

Sensor bar – front view.
Electronics also shown for reference

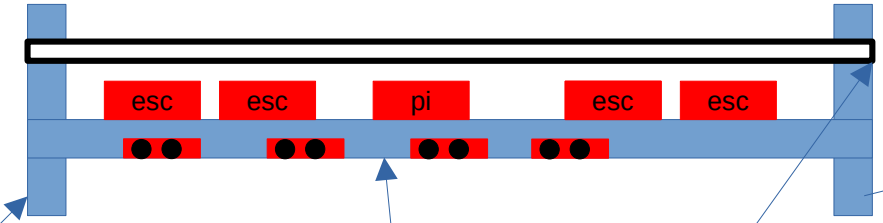

Height Adjust Bar

Sensor Reflection Cylinder

Electronics bar – contains ESC/Pi/Sensors Screw in at proper height for sensors to line up with cut grass

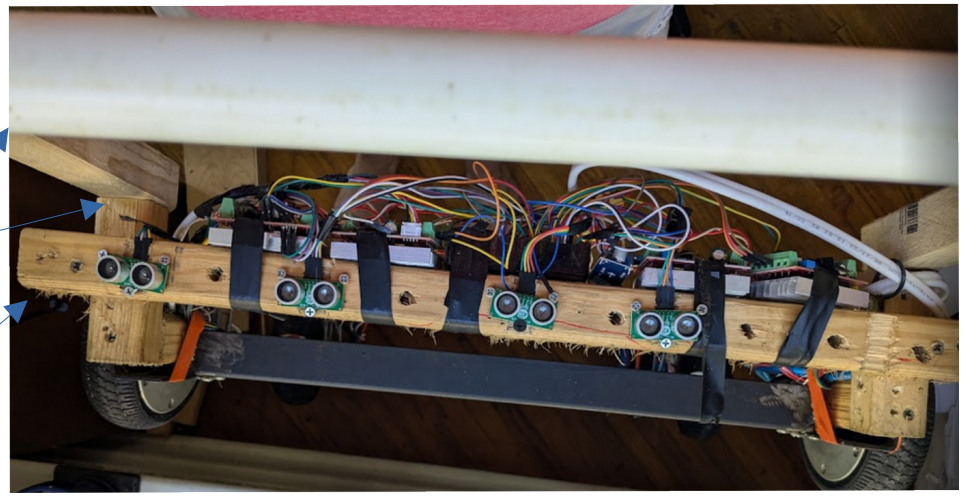

Blank

Blank