FM Transmitter:

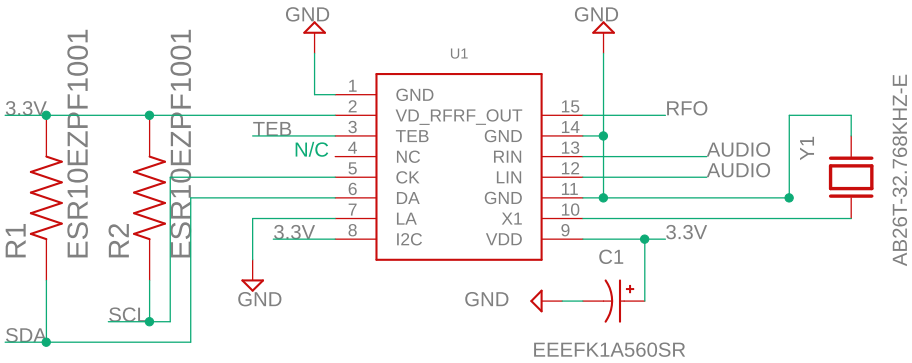

MIC:

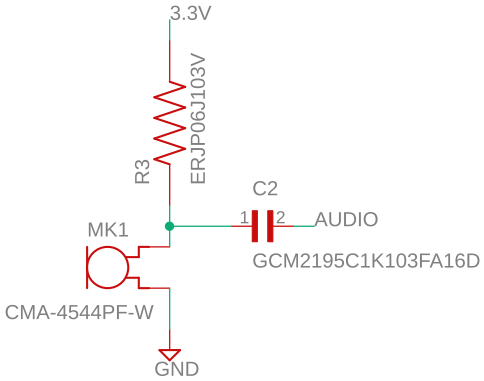

M5 Stick Connector:

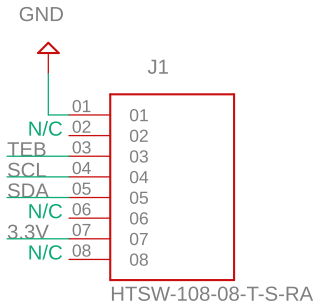

Antenna Connection:

AZUSA PACIFIC UNIVERSITY
DESIGNED BY: Nathanael Covarrubias

TITLE: Mini Radio Station-FM Transmitter

Document Number: 1

REV: SM

Date: 3/18/2023

Sheet: 1/1