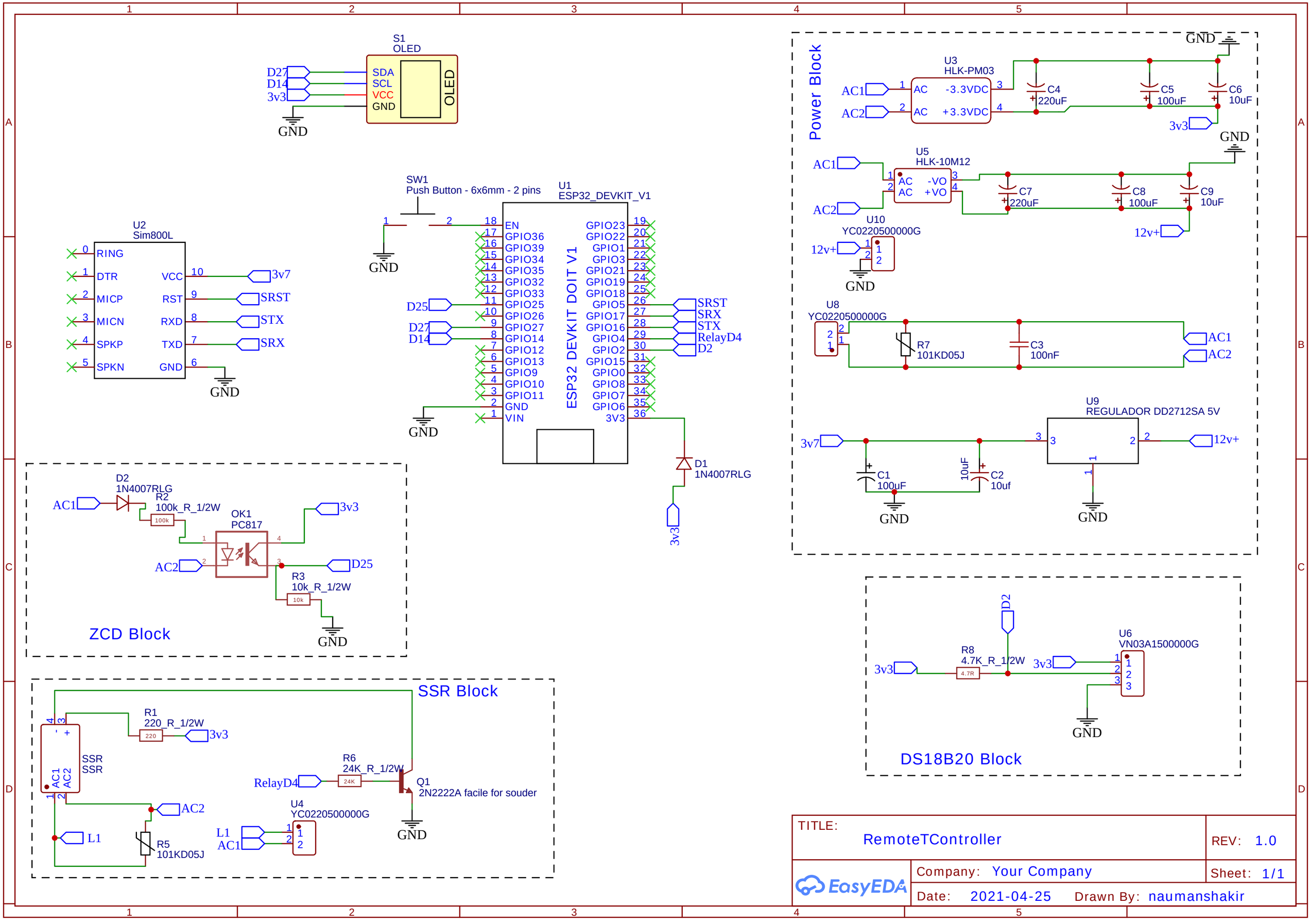
S1
OLED
D27
D14
3v3
SDA
SCL
VCC
GND
OLED
GND
U2
Sim800L
RING
DTR
MICP
MICN
SPKP
SPKN
VCC
RST
RXD
TXD
GND
3v7
SRST
STX
SRX
GND
SW1
Push Button - 6x6mm - 2 pins
U1
ESP32_DEVKIT_V1
ESP32 DEVKIT DOIT V1
EN
GPIO36
GPIO39
GPIO34
GPIO35
GPIO32
GPIO33
GPIO25
GPIO26
GPIO27
GPIO14
GPIO12
GPIO13
GPIO9
GPIO10
GPIO11
GND
VIN
GPIO23
GPIO22
GPIO1
GPIO3
GPIO21
GPIO19
GPIO18
GPIO5
GPIO17
GPIO16
GPIO4
GPIO2
GPIO15
GPIO0
GPIO8
GPIO7
GPIO6
3V3
D25
D27
D14
SRST
SRX
STX
RelayD4
D2
D1
1N4007RLG
3v3
Power Block
U3
HLK-PM03
AC1
AC2
AC
-3.3VDC
+3.3VDC
C4
220uF
C5
100uF
C6
10uF
3v3
GND
U5
HLK-10M12
-VO
+VO
C7
220uF
C8
100uF
C9
10uF
12v+
U10
YC0220500000G
U8
YC0220500000G
R7
101KD05J
C3
100nF
U9
REGULADOR DD2712SA 5V
3v7
C1
100uF
10uF
C2
10uf
12v+
D2
1N4007RLG
R2
100k_R_1/2W
OK1
PC817
R3
10k_R_1/2W
ZCD Block
SSR Block
R1
220_R_1/2W
SSR
SSR
R6
24K_R_1/2W
Q1
2N2222A facile for souder
RelayD4
U4
YC0220500000G
L1
R5
101KD05J
D2
R8
4.7K_R_1/2W
U6
VN03A1500000G
DS18B20 Block
TITLE:
RemoteTController
REV: 1.0
Company: Your Company
Sheet: 1/1
Date: 2021-04-25
Drawn By: naumanshakir
EasyEDA