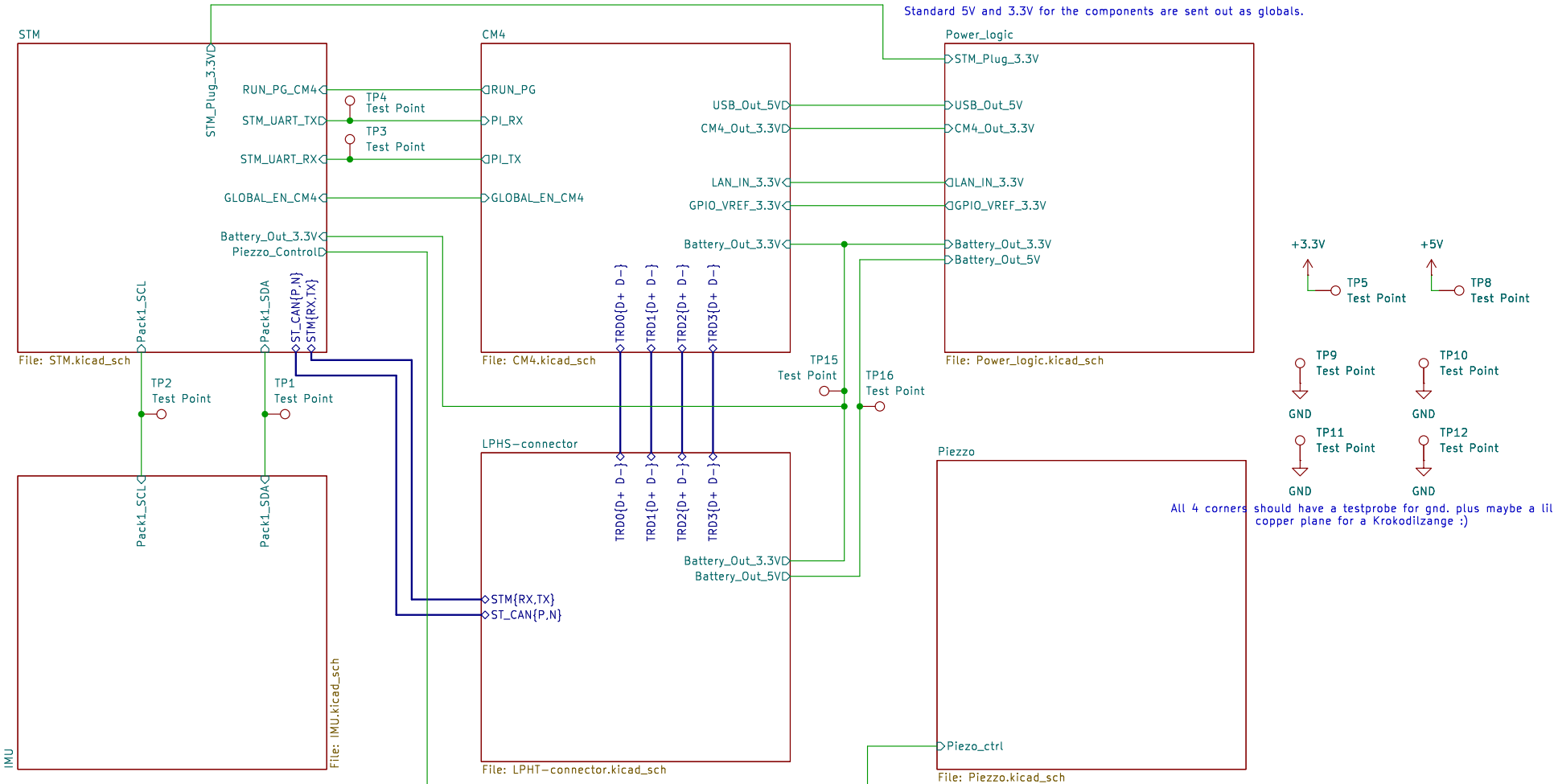

Changelog:

+ Added Bus where it seems reasonable.
+ Added unified LED symbol (Red power, Yellow data)
+ Added Buzzer logic and Buzzer
+ Added Sheet titles, Authors, Date, Revision
+ Added ESD protection on all Plugs (not sure if 3.3V is correct like that)

- Removed Overengineered Power distribution system
+ Implemented simpler Power distribution system
- Reduced Globals to a minimum, used +3.3V and +5V for voltage of parts
+ Introduced a lot of TestPoints with symbol that catches the eye fast.

* Redesigned some Symbols
* Cleaned up rubbish and wiring sphagetti

- Removed PCB for new layout. (WIP)

Notes:
-> Fan not yet updated, still a screw terminal.
-> Piezzo randomly connected to an STM Pin. Evan should check this.
-> PCB in the making.
Issue: Footprint and Model for SSD holder not present anymore @evan

20.11.2025
Switched R18 from 1k to 2.2k for equal led strength

+ Added more routing in PCB.

Title: Nautilus_Mainboard		
Sheet: /		Rev: 0
Author: Evan & Davide		
Date: 2025−11−19	Size: A4	Id: 1/20
File: nautilus_mainboard.kicad_sch		

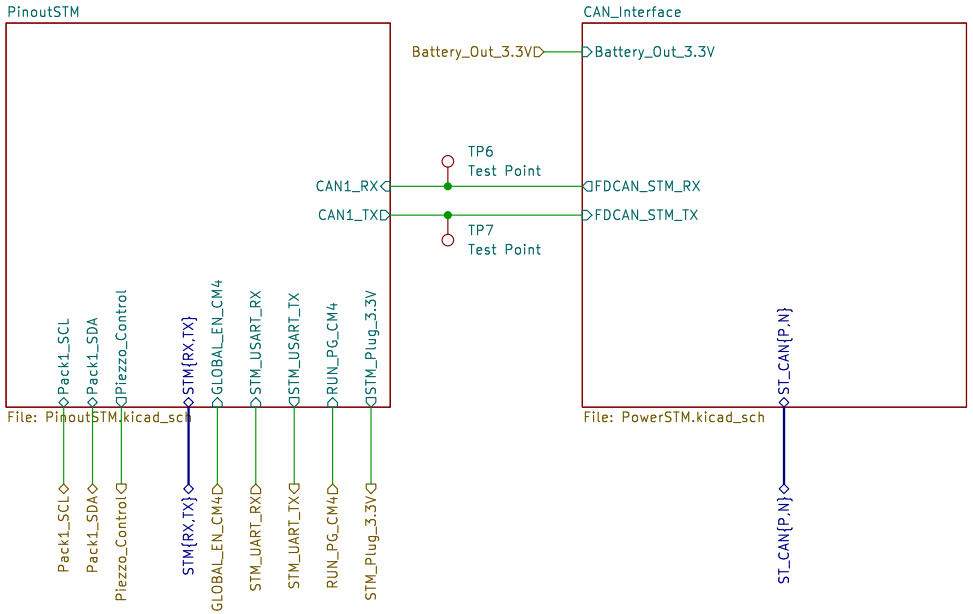

Title: Nautilus_Mainboard		
Sheet: /STM/		Rev: 0
Author: Evan		
Date: 2025-11-19	Size: A4	Id: 2/20
File: STM.kicad_sch		

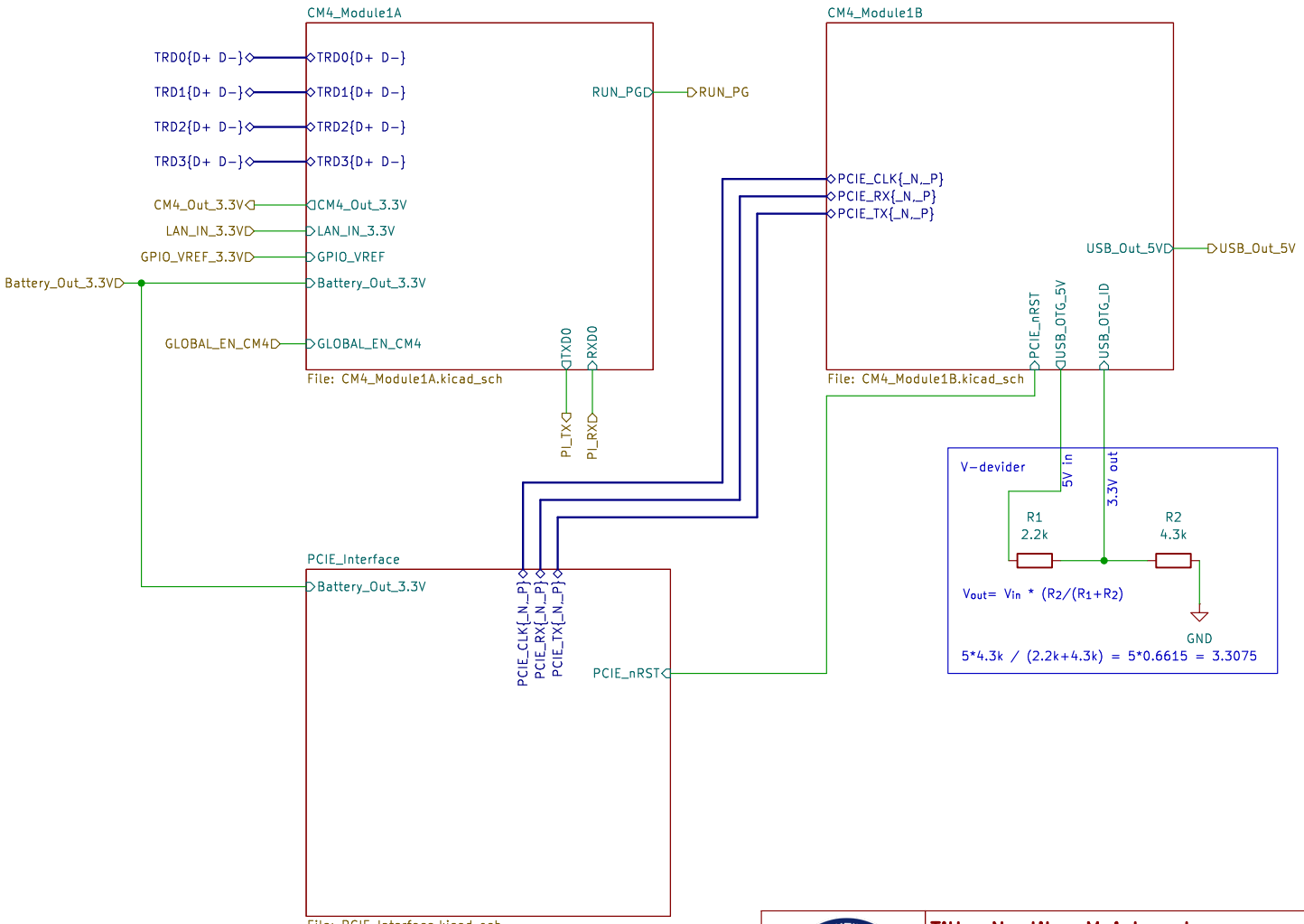

Title: Nautilus_Mainboard

Sheet: /CM4/		Rev: 0
Author: Davide		
Date: 2025−11−19	Size: A4	Id: 3/20
File: CM4.kicad_sch		

Not in the PCB yet as we dont know if we actually need it.

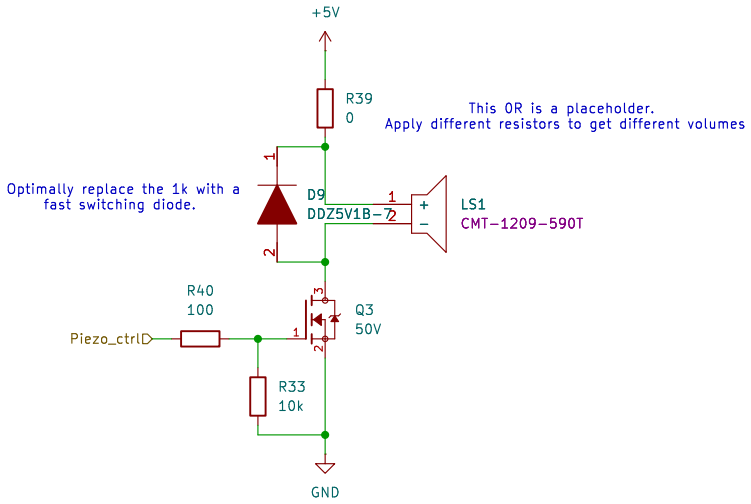

Title: Nautilus_Mainboard		
Sheet: /Piezzo/		Rev: 0
Author: Evan		
Date: 2025-11-19	Size: A4	Id: 4/20
File: Piezzo.kicad_sch		

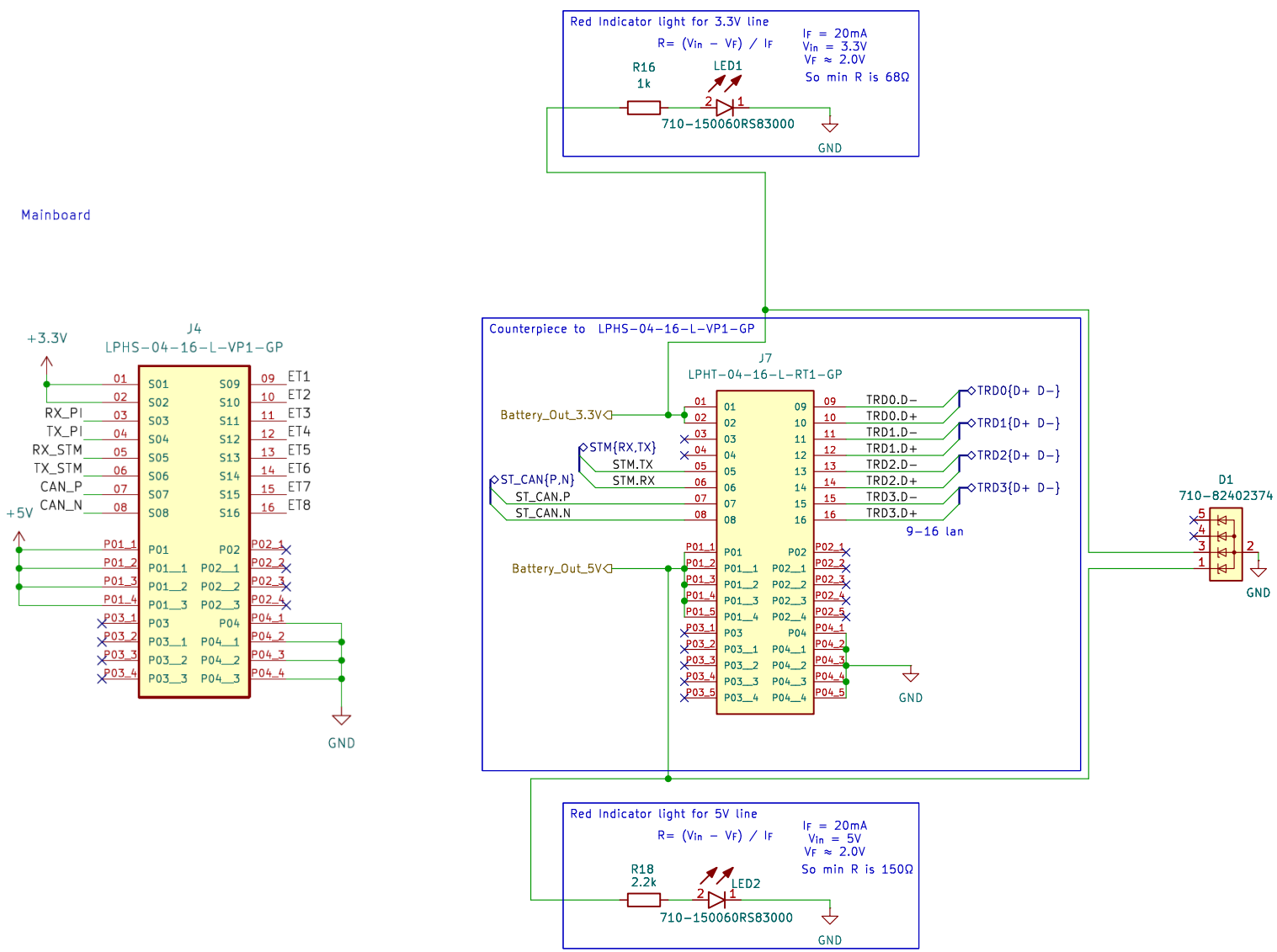

Title: Nautilus_Mainboard

Sheet: /LPHS−connector/		Rev: 1
Author: Davide, Evan		
Date: 2025−11−19	Size: A4	Id: 14/20
File: LPHT−connector.kicad_sch		

some rules:
USB wont power the STM32.
STM_Plug wont power the CM4
The GPIO_VREF of the CM4 needs to be STM32's 3.3V
The Lan Vin is only powered when running on Battery
Battery preferrably powers everything.

Whenever the CM4 runs, also run the LED signals AND the SSD voltage. all "core" tasks tied to the CM4.

Different Power Sources.

Reference power sources

Battery

Battery_Out_3.3V

Battery_Out_5V

STM_Plug

STM_Plug_3.3V

CM4 Vout

CM4_Out_3.3V

USB Cable

USB_Out_5V

Lan only if plugged in (battery)

place to deactivate

R46 0

R47 0

3.3V_Logic

R44 0

R45 0

place to activate

Battery_Out_3.3V

STM_Plug_3.3V

STM_In_3.3V

File: 3.3V_Logic.kicad_sch

LAN_IN_3.3V

+3.3V

Red Indicator light for 3.3V line

R= (Vin − VF) / IF

IF = 20mA

Vin = 3.3V

VF ≈ 2.0V

So min R is 68Ω

R24 1k

LED9

710-150060RS83000

GND

place to deactivate

R38 0

R41 0

GPIO_REF3.3V

R42 0

R43 0

place to activate

STM_IN_3.3V

CM4_OUT_3.3V

GPIO_VREF_3.3V

File: GPIO_REF3.3V.kicad_sch

GPIO_VREF_3.3V

place to deactivate

0

0

R35

5V_Logic

R36 0

R37 0

place to activate

Battery_Out_5V

USB_Out_5V

CM4_In_5V

File: 5V_Logic.kicad_sch

+5V

Red Indicator light for 5V line

R= (Vin − VF) / IF

IF = 20mA

Vin = 5V

VF ≈ 2.0V

So min R is 150Ω

R25 1k

LED10

710-150060RS83000

GND

Title: Nautilus_Mainboard		
Sheet: /Power_logic/		Rev: 1
Author: Davide		
Date: 2025-11-19	Size: A4	Id: 14/20
File: Power_logic.kicad_sch		

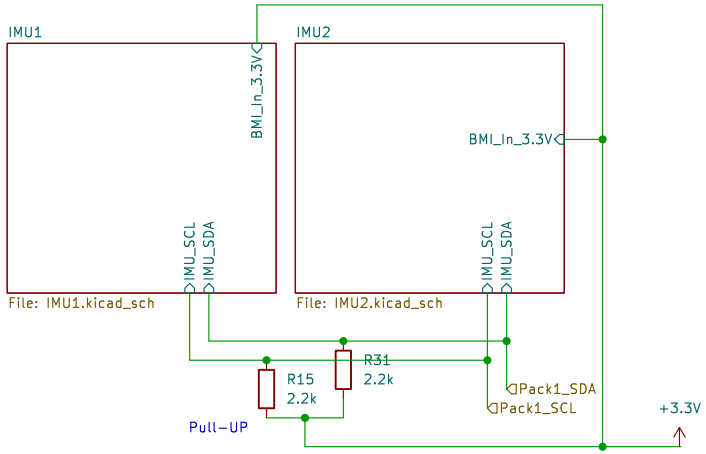

Title: Nautilus_Mainboard		
Sheet: /IMU/		Rev: 0
Author: Davide		
Date: 2025-11-19	Size: A4	Id: 18/20
File: IMU.kicad_sch		

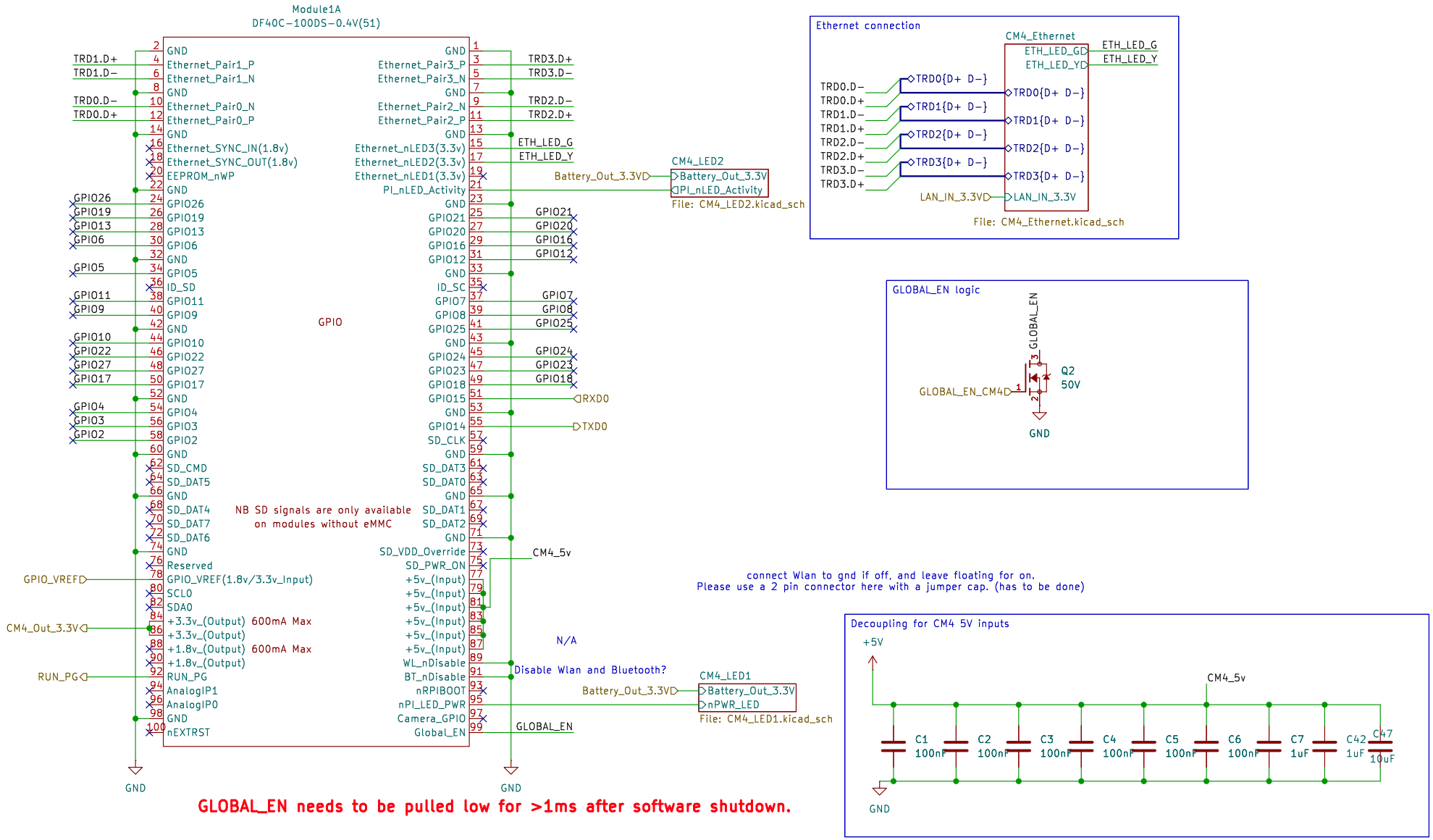

GLOBAL_EN needs to be pulled low for >1ms after software shutdown.

Title: Nautilus_Mainboard

Sheet: /CM4/CM4_Module1A/ | Rev: 0

Author: Davide

Date: 2025-11-19 | Size: A4 | Id: 5/20

File: CM4_Module1A.kicad_sch

Fan controller

I am a fan.

fan only active when battery is connected.
Mby add an external power pin to externally power the fan for testing.

This part should be changed... implement directly a fan not this 3 pin screw terminal that I randomly found @evan

Connected to PB7

External interfaces

3v3 ext was first implemented here

IC1
STM32H7B0RBT6

Chose a Pin here please.
I chose 7 but please make sure its an actual pin evan. I just gambled.
For review: if this pin is incorrect, Im sorry. I just guessed
please let me know so that I can tell evan if it needs to be changed.

must be hirarchical lable RX,TX

logic handled in power section

STDC14 for STLINK-V3MINI (STM32 JTAG/SWD and VCP)

Figure 11. CN5 STDC14 connector (Top view)

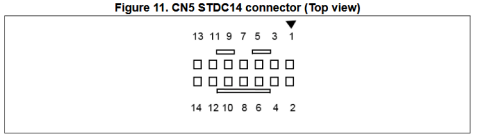

Table 4. CN5 STDC14 connector pinout

STDC14 Pin #	ARM10 Pin #	Pin description	Type
1	-	Reserved[1]	-
2	-	Reserved[1]	-
3	1	T_VCC[2]	I
4	2	T_JTMS/T_SWDIO	I/O
5	3	GND	S
6	4	T_JCLK/T_SWCLK	O
7	5	GND	S
8	6	T_JTDO/T_SWO[3]	I
9	7	T_JCLK	O
10	8	T_JTDI/NC[4]	O
11	9	GNDDetect	O
12	10	T_NRST	O
13	-	T_VCP_RX	O
14	-	T_VCP_TX	I

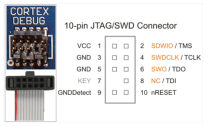

Figure 10. JTAG debugging flat ribbon layout

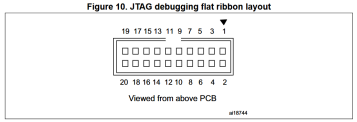

Title:	Nautilus_Mainboard
Sheet:	/STM/PinoutSTM/
Rev:	0
Author:	Evan
Date:	2025-11-19
Size:	A4
Id:	6/20
File:	PinoutSTM.kicad_sch

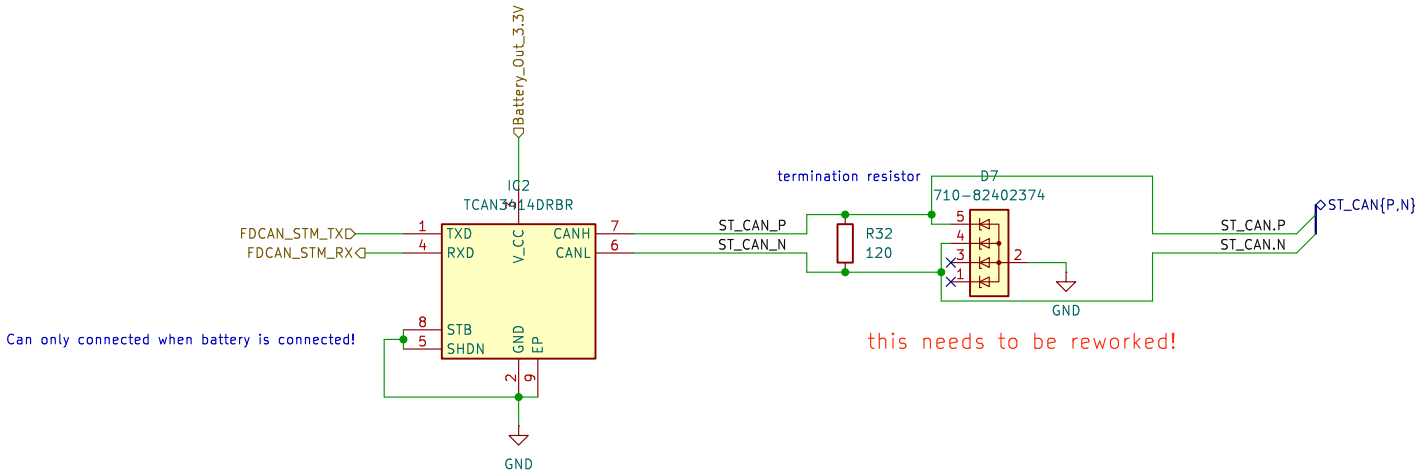

Title:	Nautilus_Mainboard
Sheet:	/STM/CAN_Interface/
Rev:	1
Author:	Evan & Davide
Date:	2025-11-19
Size:	A4
Id:	7/20
File:	PowerSTM.kicad_sch

Module1B
DF40C-100DS-0.4V(51)

Can be kept floating. if no usb is connected

PCIE_CLK{_N,_P}
PCIE_CLK._P
PCIE_CLK._N
PCIE_RX{_N,_P}
PCIE_RX._P
PCIE_RX._N
PCIE_TX{_N,_P}
PCIE_TX._P
PCIE_TX._N

maybe RX and TX need to be switched

102	PCIe_CLK_nREQ	USB_OTG_ID	101
104	Reserved	USB2_N	103
106	Reserved	USB2_P	105
108	GND	GND	107
110	PCIe_CLK_P	PCIe_nRST	109
112	PCIe_CLK_N	VDAC_COMP	111
114	GND	GND	113
116	PCIe_RX_P	CAM1_D0_N	115
118	PCIe_RX_N	CAM1_D0_P	117
120	GND	GND	119
122	PCIe_TX_P	CAM1_D1_N	121
124	PCIe_TX_N	CAM1_D1_P	123
126	GND	GND	125
128	CAM0_D0_N	CAM1_C_N	127
130	CAM0_D0_P	CAM1_C_P	129
132	GND	GND	131
134	CAM0_D1_N	CAM1_D2_N	133
136	CAM0_D1_P	CAM1_D2_P	135
138	GND	GND	137
140	CAM0_C_N	CAM1_D3_N	139
142	CAM0_C_P	CAM1_D3_P	141
144	GND	HDMI1_HOTPLUG	143
146	HDMI1_TX2_P	HDMI1_SDA	145
148	HDMI1_TX2_N	HDMI1_SCL	147
150	GND	HDMI1_CEC	149
152	HDMI1_TX1_P	HDMI0_CEC	151
154	HDMI1_TX1_N	HDMI0_HOTPLUG	153
156	GND	GND	155
158	HDMI1_TX0_P	DSI0_D0_N	157
160	HDMI1_TX0_N	DSI0_D0_P	159
162	GND	GND	161
164	HDMI1_CLK_P	DSI0_D1_N	163
166	HDMI1_CLK_N	DSI0_D1_P	165
168	GND	GND	167
170	HDMI0_TX2_P	DSI0_C_N	169
172	HDMI0_TX2_N	DSI0_C_P	171
174	GND	GND	173
176	HDMI0_TX1_P	DSI1_D0_N	175
178	HDMI0_TX1_N	DSI1_D0_P	177
180	GND	GND	179
182	HDMI0_TX0_P	DSI1_D1_N	181
184	HDMI0_TX0_N	DSI1_D1_P	183
186	GND	GND	185
188	HDMI0_CLK_P	DSI1_C_N	187
190	HDMI0_CLK_N	DSI1_C_P	189
192	GND	GND	191
194	DSI1_D3_N	DSI1_D2_N	193
196	DSI1_D3_P	DSI1_D2_P	195
198	GND	GND	197
200	HDMI0_SCL	HDMI0_SDA	199

High Speed Serial

USB_OTG_ID
USB_D-
USB_D+
PCIE_nRST

GND
GND

ESD protection for the USB

Super important to not differ lengths
or curve a lot with D+ and D-.
Also should have same hole
counts (vias) and same length.

D5
595-TPD2EUSB30DRTR
GND
D+
D-
USB_D-
USB_D+

old usb port for reference.

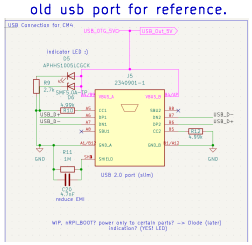

USB Connection for CM4

J3
179-UJ20CHC4SMTTR

USB_OTG_5V
USB_Out_5V
710-150060RS83000 R9
1k
LED3
SMF5.0A-TP
D6
GND

A9_B4
A4_B9
VBUS
DN1
DP1
DN2
DP2
CC1
SBU1
CC2
SBU2
GND
SHIELD
A12_B1
SH1
SH2
SH3
SH4
A7
A6
B7
B6
A5
A8
B5
B8
USB_D-
USB_D+
4.99k
R10
R12
R11
1M
C20
4.7nF

WIP, nRPI_BOOT? power only to certain parts? -> Diode (later)
indication? (YES! LED)

Title: Nautilus_Mainboard		
Sheet: /CM4/CM4_Module1B/		Rev: 0
Author: Davide		
Date: 2025-11-19	Size: A4	Id: 11/20
File: CM4_Module1B.kicad_sch		

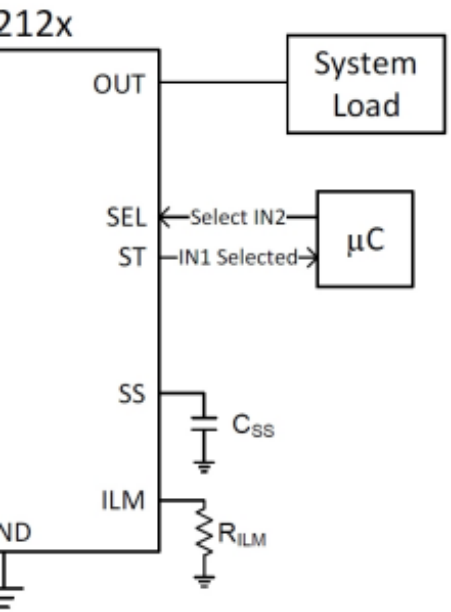

for questions about wiring etc please consult the datasheet...
https://www.ti.com/lit/ds/symlink/tps2120.pdf?ts=1761678178328

PR1 > CP2 -> IN1 has prio

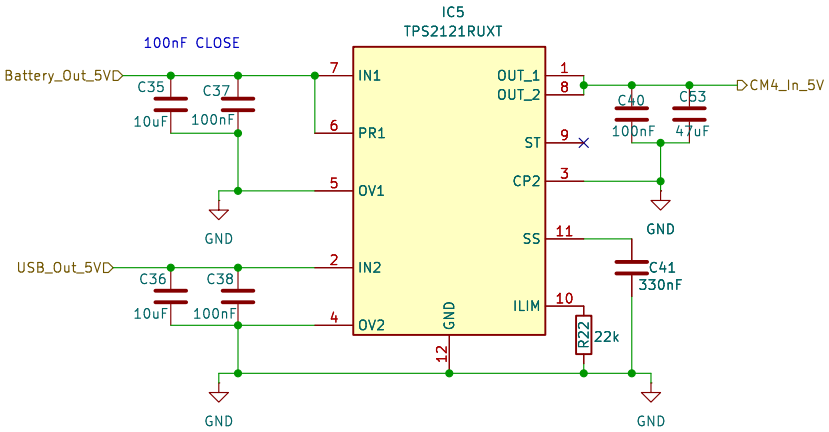

		Pins	MIN	MAX	UNIT
V_{IN1} , V_{IN2} , V_{OUT}	Maximum Power Pin Voltage	IN1, IN2, OUT	-0.3	24	V
V_{OV1} , V_{OV2}	Maximum Overvoltage Pin Voltage	OV1, OV2	-0.3	6	V
V_{PRI} , V_{SEL}	Maximum Control Pin Voltage	PRI, SEL	-0.3	6	V
V_{ST}	Maximum Control Pin Voltage	ST	-0.3	6	V
I_{OUT}	Maximum Output Current	OUT	Internally Limited		
$T_{J, MAX}$	Maximum Junction Temperature		Internally Limited		
T_{STG}	Storage temperature		-65	150	°C

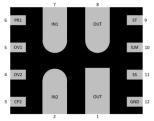

Figure 6-2. TPS2121 (RUX) Package 12-Pin VQFN-HR Bottom View

Pin Functions

PIN			I/O	DESCRIPTION
NAME	TPS2120 WCSP	TPS2121 VQFN-HR		
IN1	B1, B2, C1	7	I	Power Input for Source 1
IN2	B3, B4, C4	2	I	Power Input for Source 2
OUT	C2, C3, D1, D2, D3, D4	1, 8	I	Power Output
ST	E1	9	O	Status output indicating which channel is selected. Connect to GND if not required.
ILIM	E2	10	O	Output Current Limiting for both channels.
SS	E3	11	O	Adjusts Input Setting Delay Time and Output Soft Start Time
GND	E4	12	—	Device Ground
PR1	A1	6	I	Enables Priority Operation. Connect to IN1 to set switchover voltage. Connect to GND if not required.
OV1	A2	5	I	Active Low Enable Supervisor for IN1 Overvoltage Protection. Connect to GND if not required.
OV2	A3	4	I	Active Low Enable Supervisor for IN2 Overvoltage Protection. Connect to GND if not required.
SEL	A4	—	I	Active low Enable for IN1. Allows GPIO to override priority operation and manually select IN2. TPS2120 only.
CP2	—	3	I	Enables Comparator Operation and is compared to PR1 to set switchover voltage. Connect to GND if not required. TPS2121 only.

if the USB-only cold start "disconnects" we can try to bump SS to 470nF instead of 330nF.

Title: Nautilus_Mainboard

Sheet: /Power_logic/5V_Logic/ | Rev: 0

Author: Davide

Date: 2025-11-19 | Size: A4 | Id: 12/20

File: 5V_Logic.kicad_sch

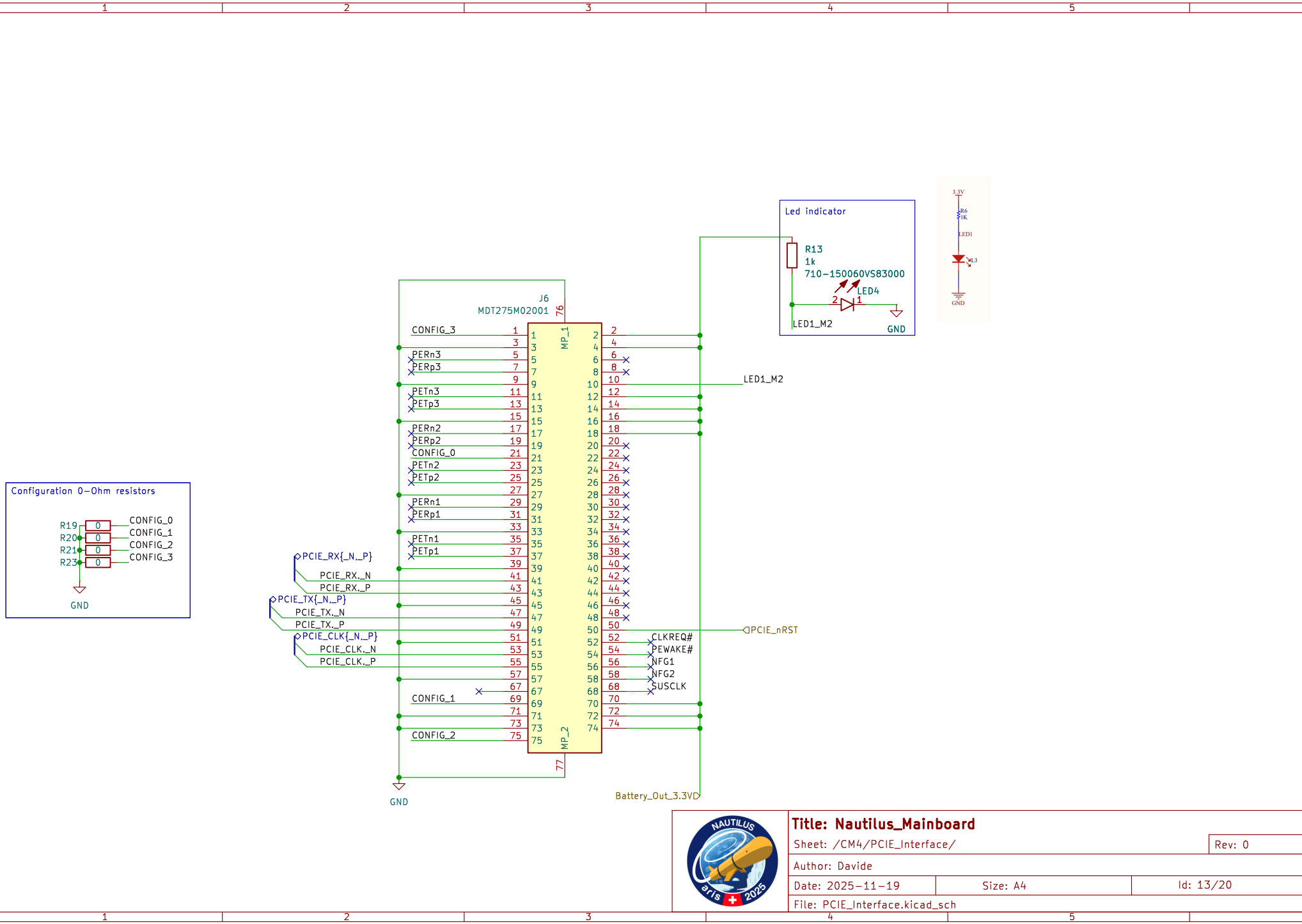

Title: Nautilus_Mainboard

Sheet: /CM4/PCIE_Interface/		Rev: 0
Author: Davide		
Date: 2025-11-19	Size: A4	Id: 13/20
File: PCIE_Interface.kicad_sch		

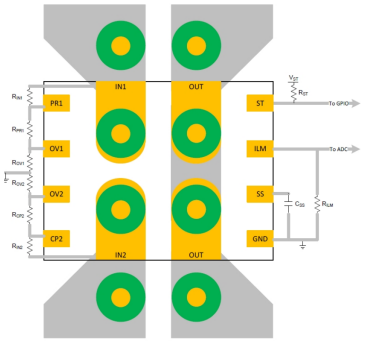

PR1 > CP2 -> IN1 has prio

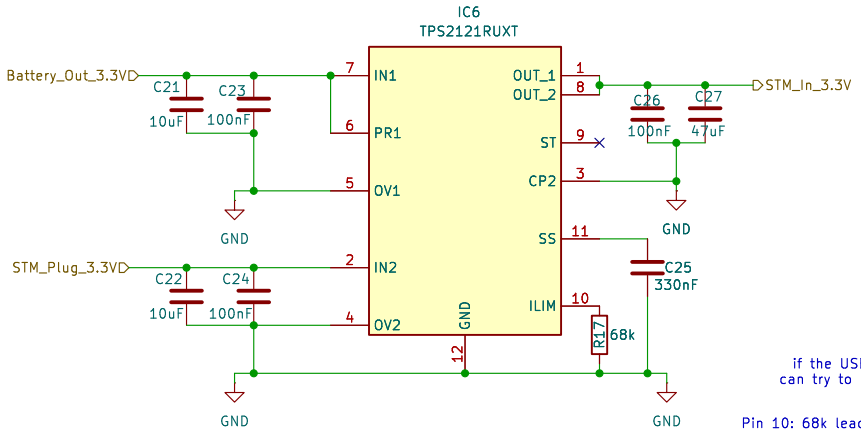

if the USB-only cold start "disconnects" we can try to bump SS to 470nF instead of 330nF.

Pin 10: 68k leads to about 1.72A (should be enough for STM)

[R] = [kOhm]	22 kΩ → ~4.55 A
65.2 / R^0.861	39 kΩ → ~2.78 A
	50 kΩ → ~2.25 A
	56 kΩ → ~2.04 A
	68 kΩ → ~1.72 A
	100 kΩ → ~1.24 A

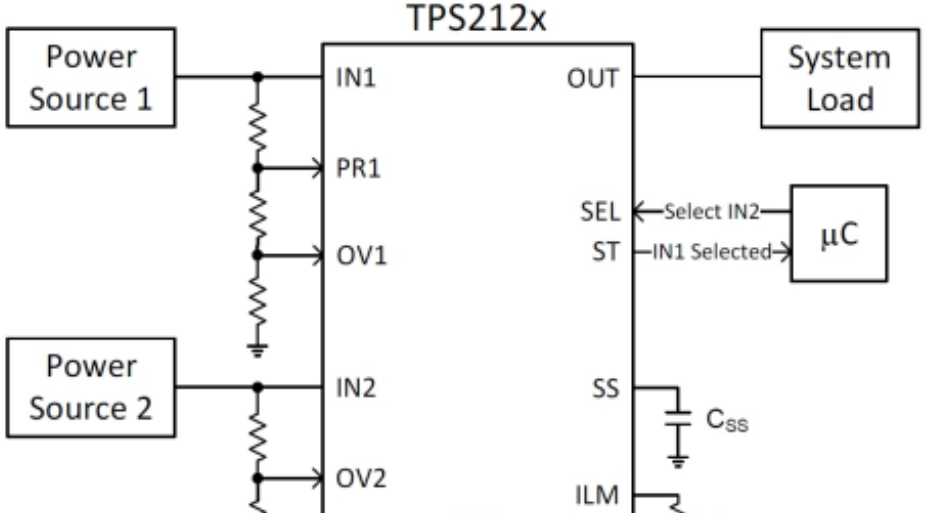

oard

_Logic/

Rev: 0

Size: A4

Id: 15/20

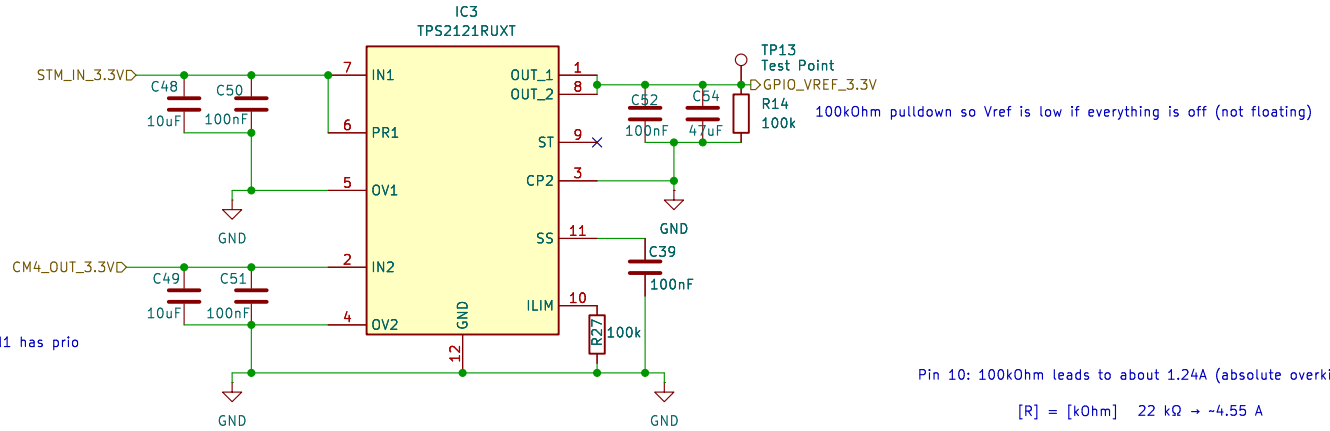

Pin 10: 100kOhm leads to about 1.24A (absolute overkill)

[R] = [kOhm]	22 kΩ → ~4.55 A
65.2 / R^0.861	39 kΩ → ~2.78 A
	50 kΩ → ~2.25 A
	56 kΩ → ~2.04 A
	68 kΩ → ~1.72 A
	100 kΩ → ~1.24 A

Pin SS (11): 100nF soft start cap more than enoug as virtually no load at all at vref

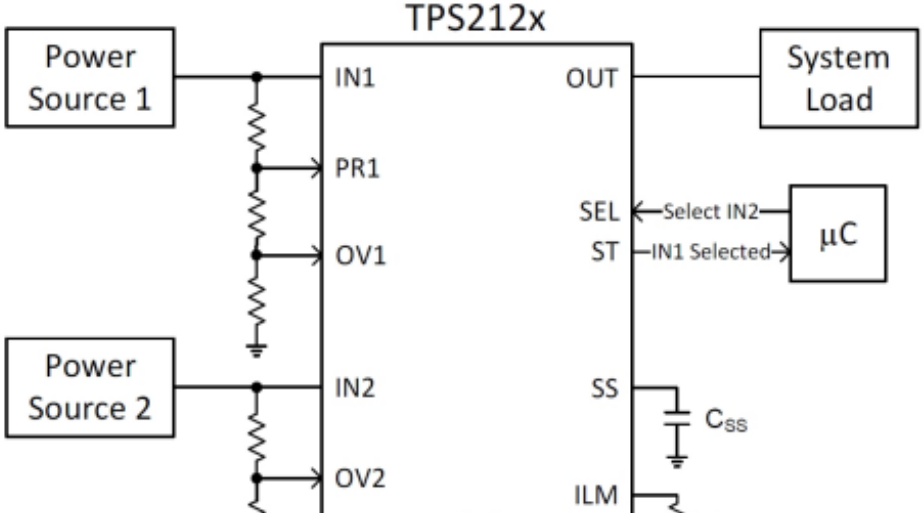

3V/

Rev: 0

Size: A4

Id: 16/20

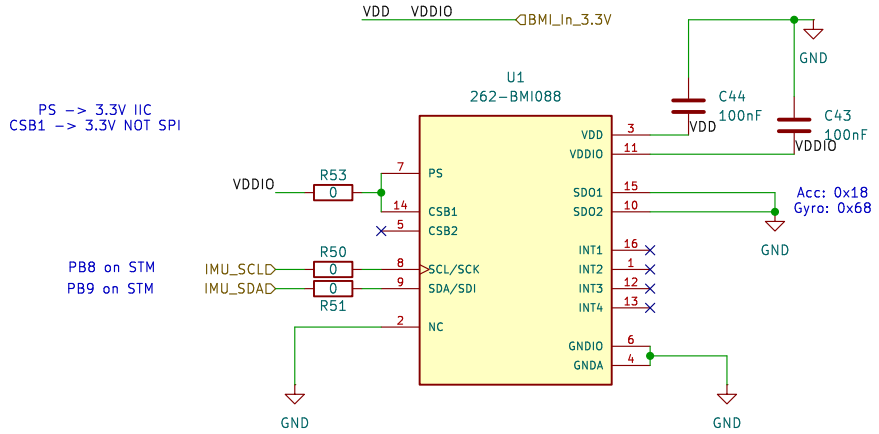

Title:	Nautilus_Mainboard
Sheet:	/IMU/IMU1/
Rev:	0
Author:	Davide
Date:	2025-11-19
Size:	A4
Id:	19/20
File:	IMU1.kicad_sch

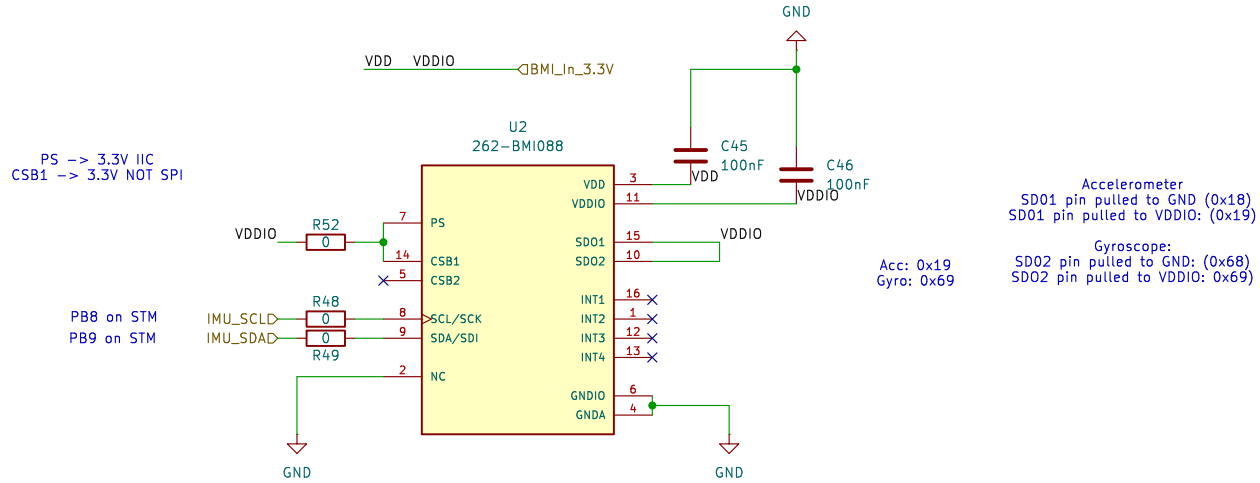

Title: Nautilus_Mainboard		
Sheet: /IMU/IMU2/		Rev: 0
Author: Davide		
Date: 2025-11-19	Size: A4	Id: 20/20
File: IMU2.kicad_sch		

Directly copied from the official CM4 io board (indicator LED for 3.3v)

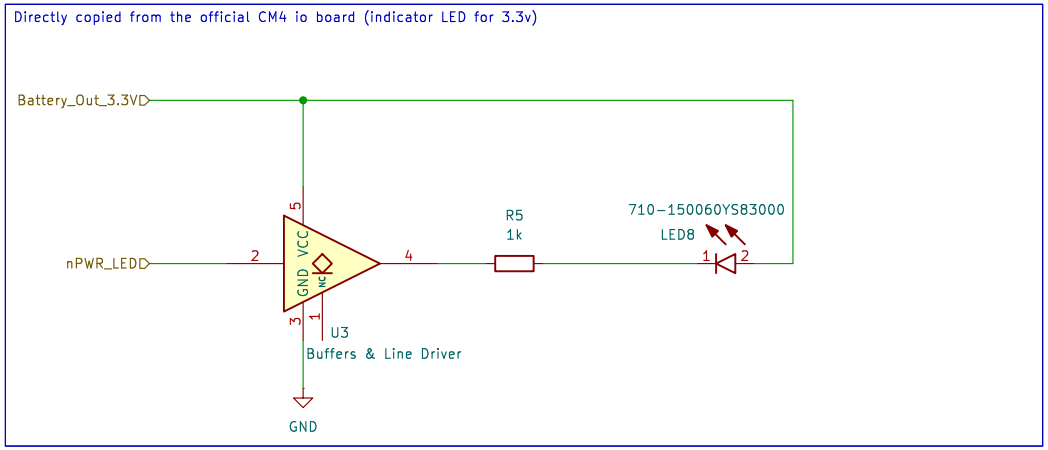

Screenshot
From the CM4 io board

Title: Nautilus_Mainboard		
Sheet: /CM4/CM4_Module1A/CM4_LED1/		Rev: 0
Author: Davide		
Date: 2025-11-19	Size: A4	Id: 8/20
File: CM4_LED1.kicad_sch		

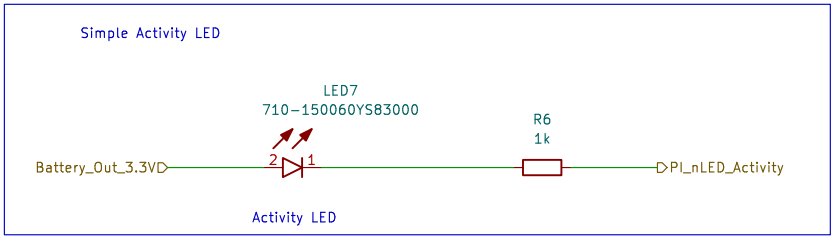

Title: Nautilus_Mainboard		
Sheet: /CM4/CM4_Module1A/CM4_LED2/		Rev: 0
Author: Davide		
Date: 2025-11-19	Size: A4	Id: 9/20
File: CM4_LED2.kicad_sch		

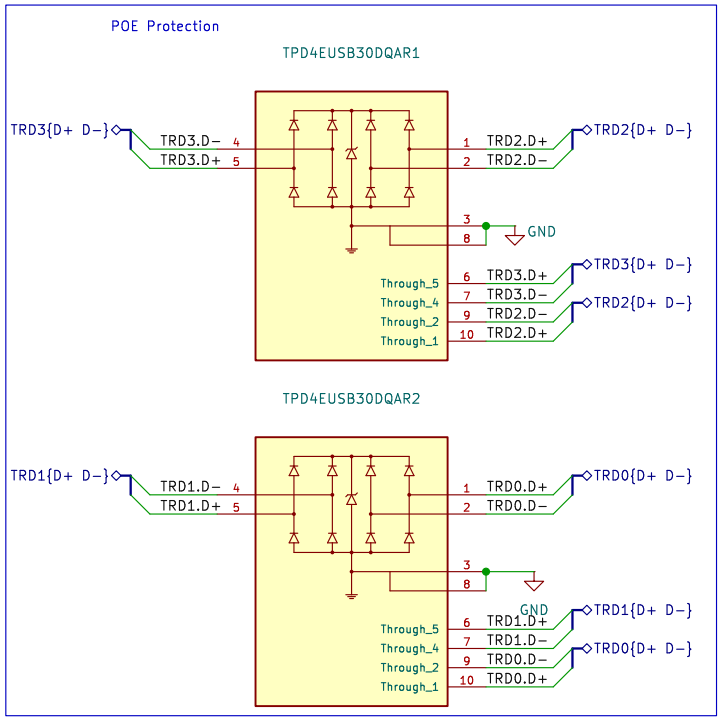

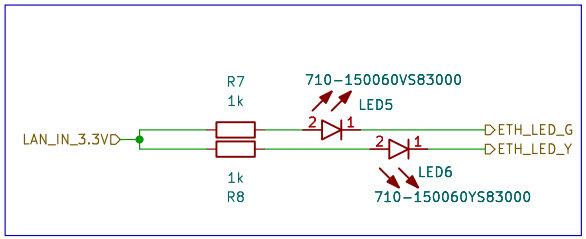

Title: Nautilus_Mainboard		
Sheet: /CM4/CM4_Module1A/CM4_Ethernet/		Rev: 0
Author: Davide		
Date: 2025−11−19	Size: A4	Id: 10/20
File: CM4_Ethernet.kicad_sch		