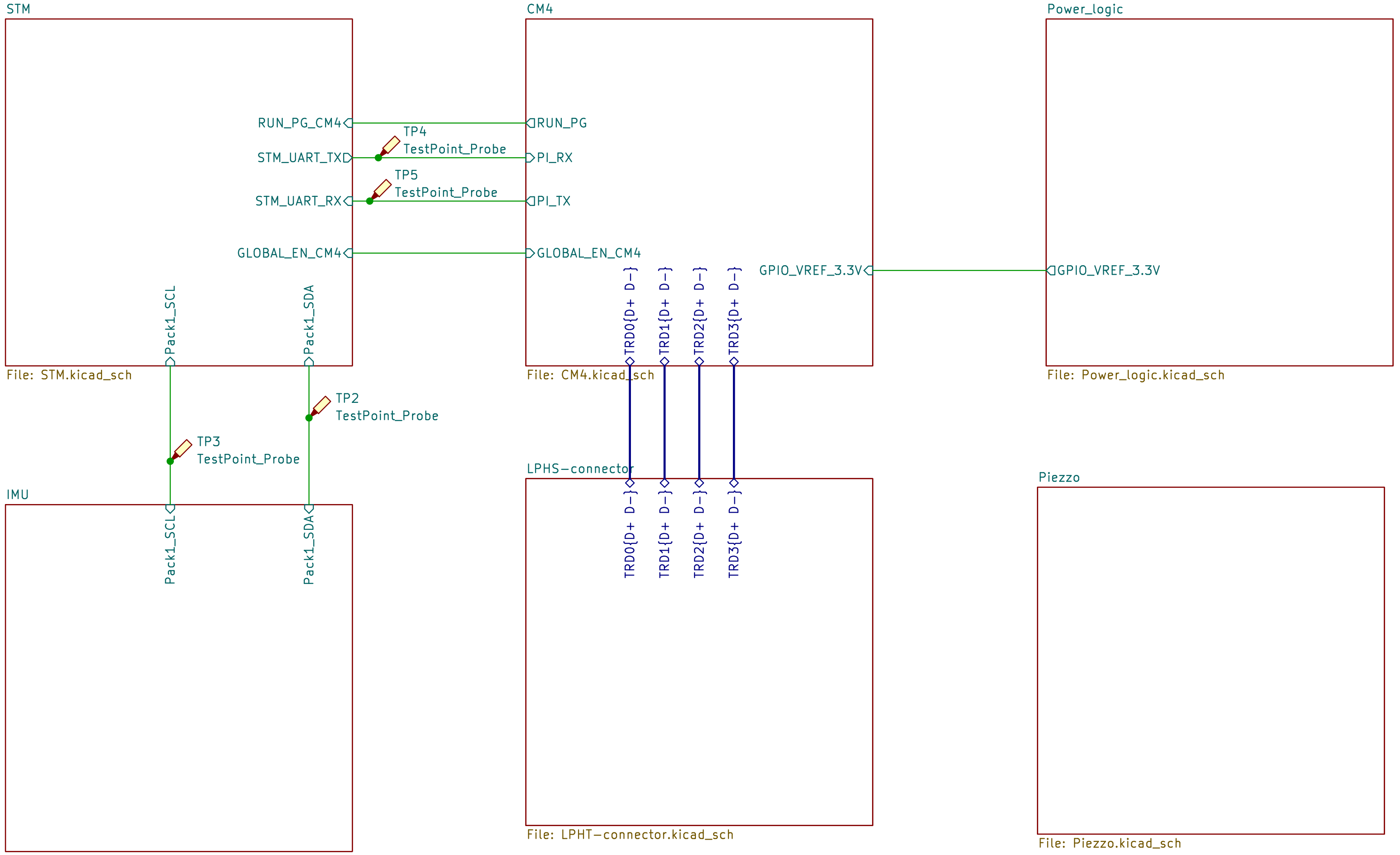
STM
RUN_PG_CM4
STM_UART_TX
STM_UART_RX
GLOBAL_EN_CM4
Pack1_SCL
Pack1_SDA
File: STM.kicad_sch
CM4
RUN_PG
PI_RX
PI_TX
GLOBAL_EN_CM4
GPIO_VREF_3.3V
TRD0{D+ D-}
TRD1{D+ D-}
TRD2{D+ D-}
TRD3{D+ D-}
File: CM4.kicad_sch
Power_logic
GPIO_VREF_3.3V
File: Power_logic.kicad_sch
TP4
TestPoint_Probe
TP5
TestPoint_Probe
TP2
TestPoint_Probe
TP3
TestPoint_Probe
IMU
Pack1_SCL
Pack1_SDA
File: IMU.kicad_sch
LPHS-connector
TRD0{D+ D-}
TRD1{D+ D-}
TRD2{D+ D-}
TRD3{D+ D-}
File: LPHT-connector.kicad_sch
Piezzo
File: Piezzo.kicad_sch

We should consider that we NEVER want the CM4 to power the unpowered STM over the TX pin. Found a neat part for that:
https://www.mouser.ch/ProductDetail/Texas-Instruments/SN74LVC1G126DBVR?qs=pajglaoyDUi3T2WgNNfd3w%3D%3D

connections:
Pin 5: VCC -> CM4_3V3

Pin 2: A -> CM4 TX (PLTX)

Pin 4: Y -> STM_UART_RX

Pin 1: OE -> STM_IN_3.3V

Pin 3: GND

0.1uF decoupling cap VCC-GND

220 Ohm series at Y (to STM). (current limiting)

**Title:**
Sheet: /
Rev:
Author:
Date:
Size: A4
Id: 1/20
File: nautilus_mainboard.kicad_sch

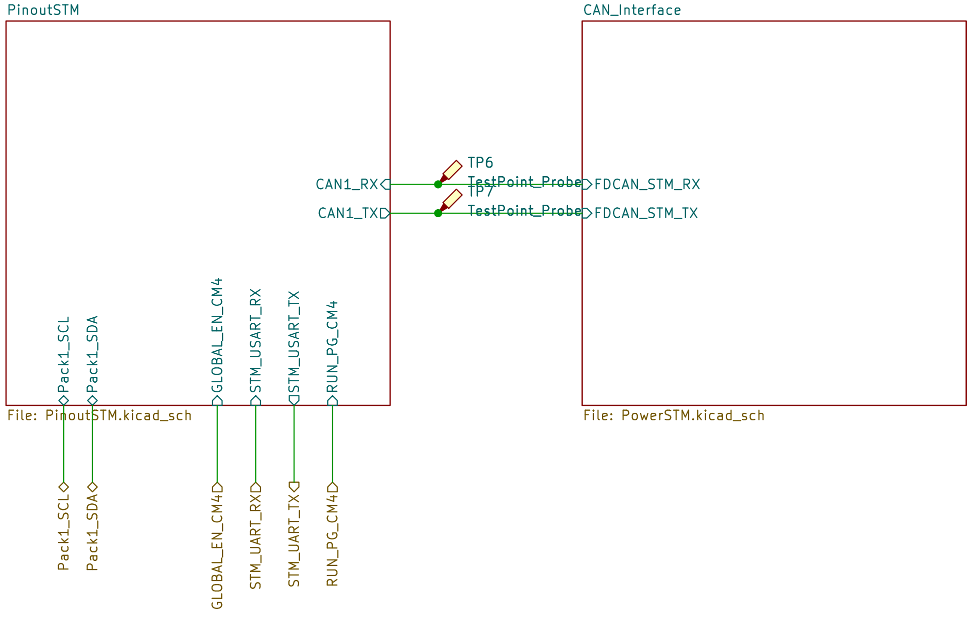
PinoutSTM
CAN_Interface
TP6
TestPoint_Probe
TP7
TestPoint_Probe
CAN1_RX
CAN1_TX
FDCAN_STM_RX
FDCAN_STM_TX
Pack1_SCL
Pack1_SDA
GLOBAL_EN_CM4
STM_USART_RX
STM_USART_TX
RUN_PG_CM4
File: PinoutSTM.kicad_sch
File: PowerSTM.kicad_sch
Pack1_SCL
Pack1_SDA
GLOBAL_EN_CM4
STM_UART_RX
STM_UART_TX
RUN_PG_CM4

**Title:**

Sheet: /STM/

Rev:

Author:

Date:

Size: A4

Id: 2/20

File: STM.kicad_sch

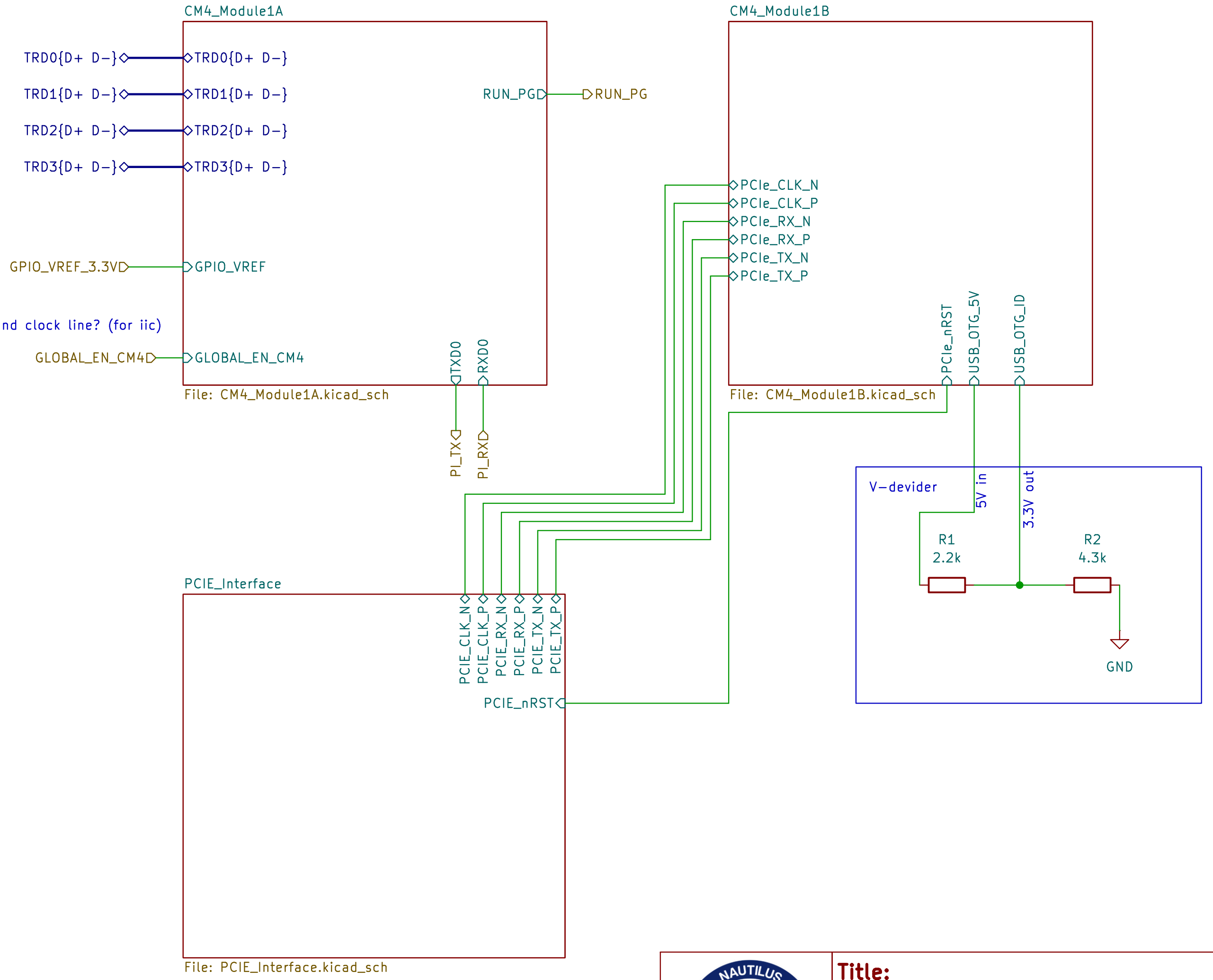
CM4_Module1A
TRD0{D+ D-}
TRD1{D+ D-}
TRD2{D+ D-}
TRD3{D+ D-}
TRD0{D+ D-}
TRD1{D+ D-}
TRD2{D+ D-}
TRD3{D+ D-}
RUN_PG
RUN_PG
GPIO_VREF_3.3V
GPIO_VREF
GLOBAL_EN_CM4
GLOBAL_EN_CM4
TXD0
RXD0
PI_TX
PI_RX
File: CM4_Module1A.kicad_sch
CM4_Module1B
PCIe_CLK_N
PCIe_CLK_P
PCIe_RX_N
PCIe_RX_P
PCIe_TX_N
PCIe_TX_P
PCIe_nRST
USB_OTG_5V
USB_OTG_ID
File: CM4_Module1B.kicad_sch
V-devider
5V in
3.3V out
R1
2.2k
R2
4.3k
GND
PCIE_Interface
PCIE_CLK_N
PCIE_CLK_P
PCIE_RX_N
PCIE_RX_P
PCIE_TX_N
PCIE_TX_P
PCIE_nRST
File: PCIE_Interface.kicad_sch

do we need BSC master 0 data line and clock line? (for iic)

**Title:**

Sheet: /CM4/

Rev:

Author:

| Date: | Size: A4 | Id: 3/20 |
|---|---|---|

File: CM4.kicad_sch

Not in the PCB yet as we dont know if we actually need it.

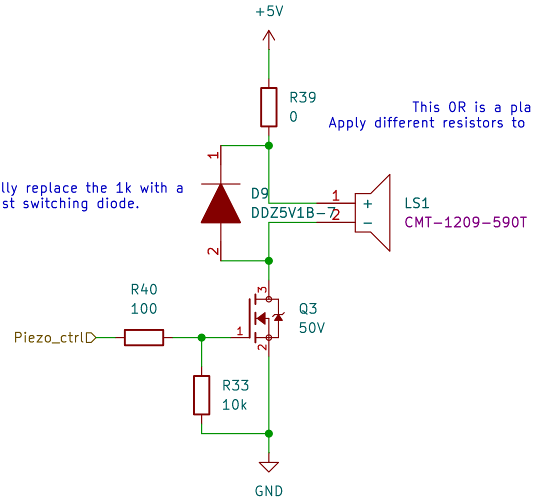
+5V
R39
0
1
D9
DDZ5V1B-7
2
1
2
+
−
LS1
CMT-1209-590T
R40
100
Piezo_ctrl
3
1
2
Q3
50V
R33
10k
GND

This OR is a placeholder.
Apply different resistors to get different volumes

Optimally replace the 1k with a
fast switching diode.

**Title:**
Sheet: /Piezzo/
Rev:
Author:
Date:
Size: A4
Id: 4/20
File: Piezzo.kicad_sch

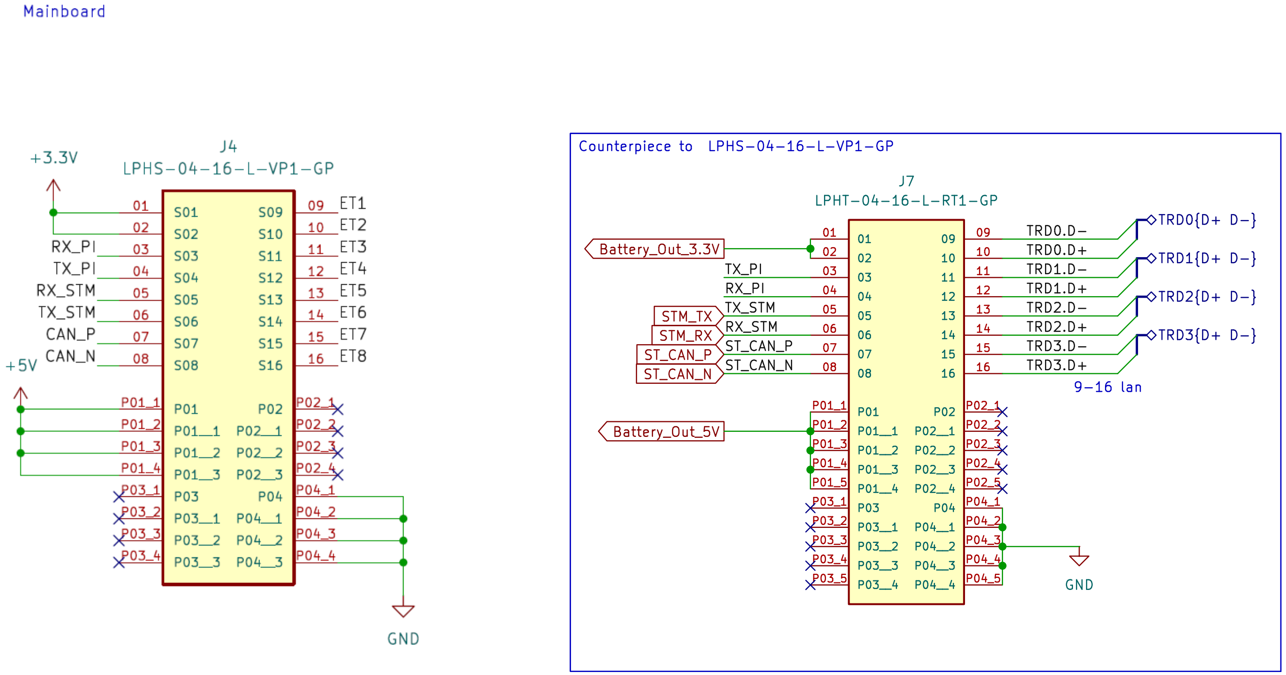
Mainboard
+3.3V
J4
LPHS-04-16-L-VP1-GP
RX_PI
TX_PI
RX_STM
TX_STM
CAN_P
CAN_N
+5V
S01
S02
S03
S04
S05
S06
S07
S08
S09
S10
S11
S12
S13
S14
S15
S16
ET1
ET2
ET3
ET4
ET5
ET6
ET7
ET8
P01
P02
P03
P04
P01_1
P01_2
P01_3
P01_4
P02_1
P02_2
P02_3
P02_4
P03_1
P03_2
P03_3
P03_4
P04_1
P04_2
P04_3
P04_4
GND
Counterpiece to LPHS-04-16-L-VP1-GP
J7
LPHT-04-16-L-RT1-GP
Battery_Out_3.3V
TX_PI
RX_PI
TX_STM
RX_STM
ST_CAN_P
ST_CAN_N
STM_TX
STM_RX
ST_CAN_P
ST_CAN_N
Battery_Out_5V
TRD0.D-
TRD0.D+
TRD1.D-
TRD1.D+
TRD2.D-
TRD2.D+
TRD3.D-
TRD3.D+
TRD0{D+ D-}
TRD1{D+ D-}
TRD2{D+ D-}
TRD3{D+ D-}
9-16 lan
P01_5
P02_5
P03_5
P04_5
GND

**Title:**

Sheet: /LPHS-connector/

Rev:

Author:

Date:

Size: A4

Id: 14/20

File: LPHT-connector.kicad_sch

Unconditional Power routes:

Whenever the CM4 runs, also run the LED signals AND the
SSD voltage. all "core" tasks tied to the CM4.

If I forgot something please let me know.

some rules:
USB wont power the STM32.
STM_Plug wont power the CM4
The GPIO_VREF of the CM4 needs to be STM32's 3.3V
The Lan Vin is only powered when running on Battery
Battery preferrably powers everything.

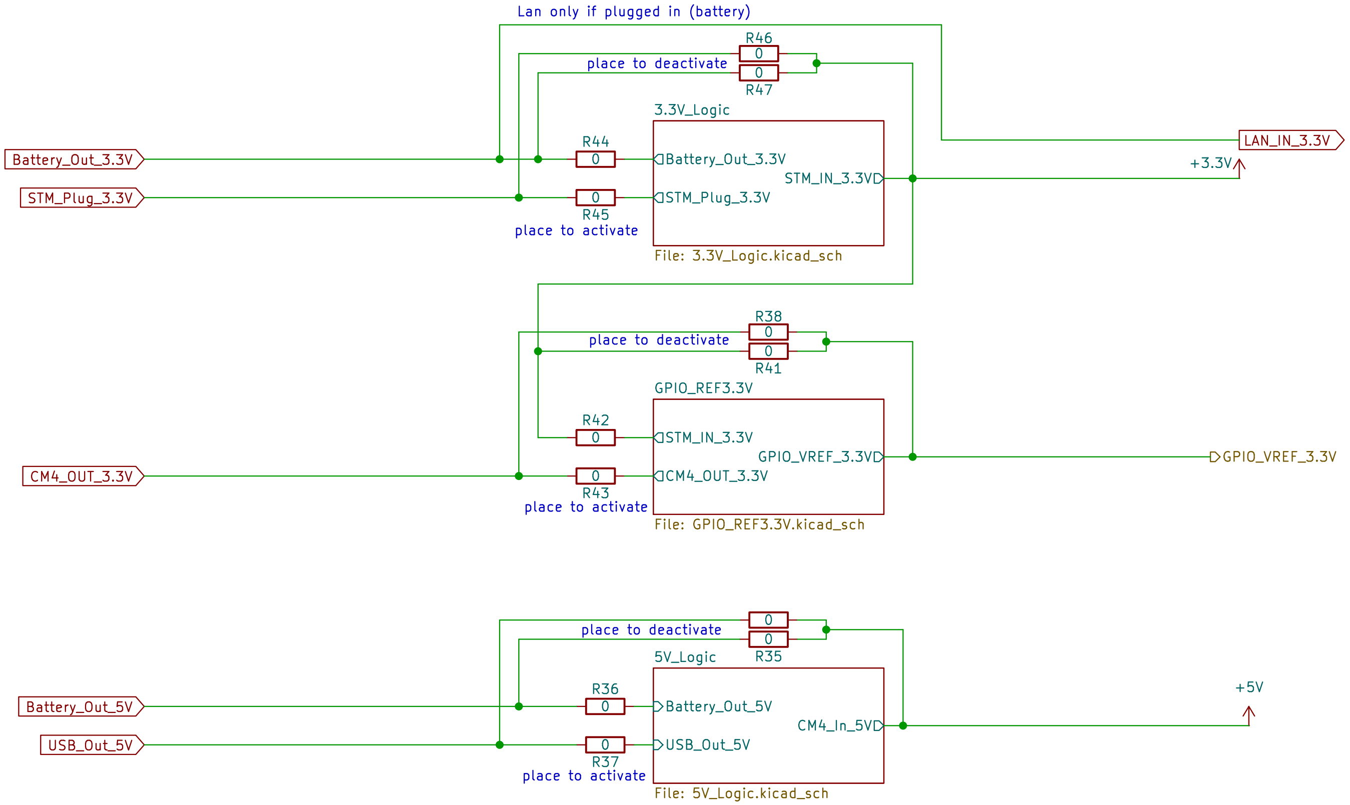
Lan only if plugged in (battery)
R46
0
place to deactivate
0
R47
3.3V_Logic
R44
0
Battery_Out_3.3V
Battery_Out_3.3V
STM_IN_3.3V
STM_Plug_3.3V
0
STM_Plug_3.3V
R45
place to activate
File: 3.3V_Logic.kicad_sch
LAN_IN_3.3V
+3.3V
R38
0
place to deactivate
0
R41
GPIO_REF3.3V
R42
0
STM_IN_3.3V
GPIO_VREF_3.3V
CM4_OUT_3.3V
0
CM4_OUT_3.3V
R43
place to activate
File: GPIO_REF3.3V.kicad_sch
GPIO_VREF_3.3V
0
place to deactivate
0
5V_Logic
R35
R36
0
Battery_Out_5V
Battery_Out_5V
CM4_In_5V
USB_Out_5V
0
USB_Out_5V
R37
place to activate
File: 5V_Logic.kicad_sch
+5V

**Title:**
Sheet: /Power_logic/
Rev:
Author:
Date:
Size: A4
Id: 14/20
File: Power_logic.kicad_sch

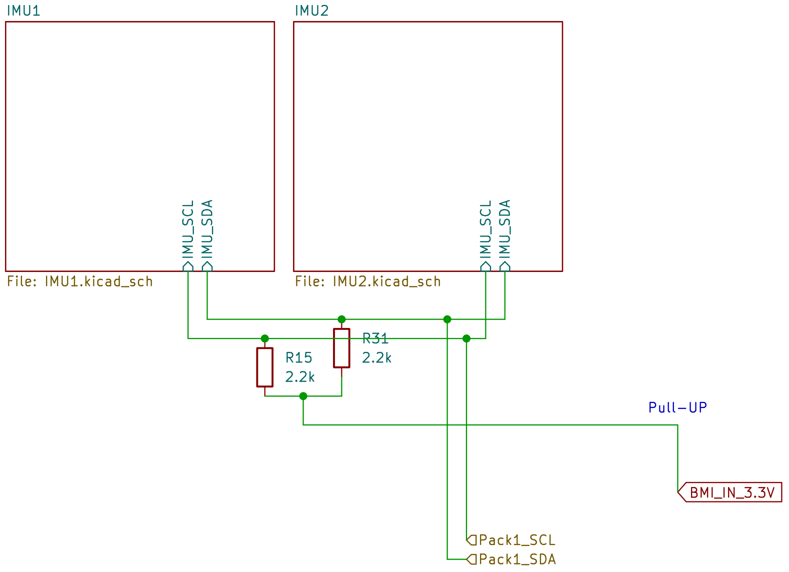
IMU1
IMU_SCL
IMU_SDA
File: IMU1.kicad_sch
IMU2
IMU_SCL
IMU_SDA
File: IMU2.kicad_sch
R31
2.2k
R15
2.2k
Pull-UP
BMI_IN_3.3V
Pack1_SCL
Pack1_SDA

**Title:**

Sheet: /IMU/

Rev:

Author:

Date:

Size: A4

Id: 18/20

File: IMU.kicad_sch

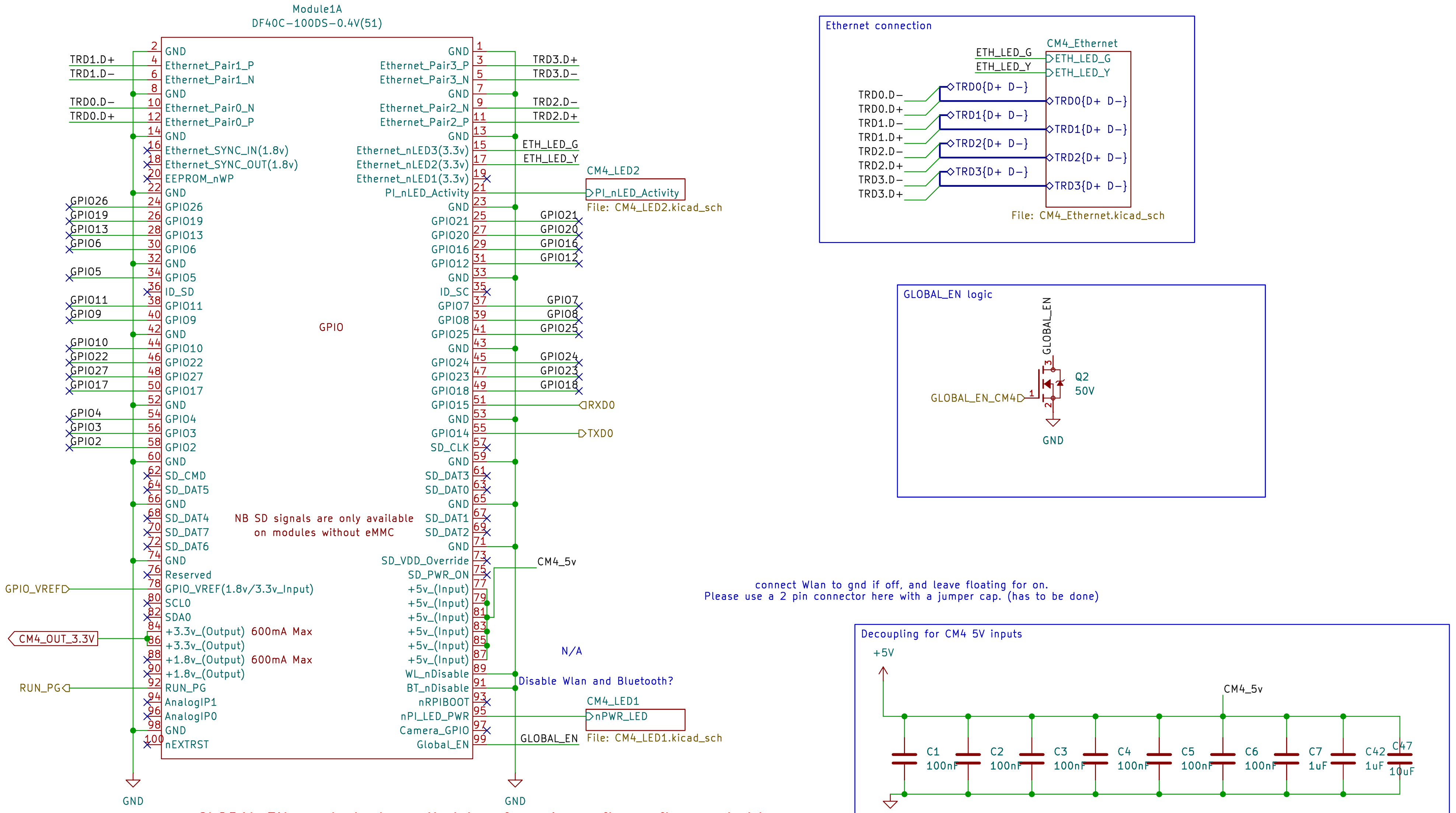
Module1A
DF40C−100DS−0.4V(51)
GPIO
2 GND
4 Ethernet_Pair1_P
TRD1.D+
6 Ethernet_Pair1_N
TRD1.D−
8 GND
10 Ethernet_Pair0_N
TRD0.D−
12 Ethernet_Pair0_P
TRD0.D+
14 GND
16 Ethernet_SYNC_IN(1.8v)
18 Ethernet_SYNC_OUT(1.8v)
20 EEPROM_nWP
22 GND
24 GPIO26
26 GPIO19
28 GPIO13
30 GPIO6
32 GND
34 GPIO5
36 ID_SD
38 GPIO11
40 GPIO9
42 GND
44 GPIO10
46 GPIO22
48 GPIO27
50 GPIO17
52 GND
54 GPIO4
56 GPIO3
58 GPIO2
60 GND
62 SD_CMD
64 SD_DAT5
66 GND
68 SD_DAT4
70 SD_DAT7
72 SD_DAT6
74 GND
76 Reserved
78 GPIO_VREF(1.8v/3.3v_Input)
GPIO_VREF
80 SCL0
82 SDA0
84 +3.3v_(Output) 600mA Max
CM4_OUT_3.3V
86 +3.3v_(Output)
88 +1.8v_(Output) 600mA Max
90 +1.8v_(Output)
92 RUN_PG
RUN_PG
94 AnalogIP1
96 AnalogIP0
98 GND
100 nEXTRST
GND
1 GND
3 Ethernet_Pair3_P
TRD3.D+
5 Ethernet_Pair3_N
TRD3.D−
7 GND
9 Ethernet_Pair2_N
TRD2.D−
11 Ethernet_Pair2_P
TRD2.D+
13 GND
15 Ethernet_nLED3(3.3v)
ETH_LED_G
17 Ethernet_nLED2(3.3v)
ETH_LED_Y
19 Ethernet_nLED1(3.3v)
21 PI_nLED_Activity
CM4_LED2
PI_nLED_Activity
File: CM4_LED2.kicad_sch
23 GND
25 GPIO21
27 GPIO20
29 GPIO16
31 GPIO12
33 GND
35 ID_SC
37 GPIO7
39 GPIO8
41 GPIO25
43 GND
45 GPIO24
47 GPIO23
49 GPIO18
51 GPIO15
RXD0
53 GND
55 GPIO14
TXD0
57 SD_CLK
59 GND
61 SD_DAT3
63 SD_DAT0
65 GND
67 SD_DAT1
69 SD_DAT2
71 GND
73 SD_VDD_Override
75 SD_PWR_ON
CM4_5v
77 +5v_(Input)
79 +5v_(Input)
81 +5v_(Input)
83 +5v_(Input)
85 +5v_(Input)
87 +5v_(Input)
89 WL_nDisable
91 BT_nDisable
93 nRPIBOOT
95 nPI_LED_PWR
CM4_LED1
nPWR_LED
File: CM4_LED1.kicad_sch
97 Camera_GPIO
99 Global_EN
GLOBAL_EN
GND
NB SD signals are only available
on modules without eMMC
N/A
Disable Wlan and Bluetooth?
Ethernet connection
CM4_Ethernet
ETH_LED_G
ETH_LED_Y
TRD0.D−
TRD0.D+
TRD1.D−
TRD1.D+
TRD2.D−
TRD2.D+
TRD3.D−
TRD3.D+
TRD0{D+ D−}
TRD1{D+ D−}
TRD2{D+ D−}
TRD3{D+ D−}
File: CM4_Ethernet.kicad_sch
GLOBAL_EN logic
GLOBAL_EN
GLOBAL_EN_CM4
Q2
50V
1
2
3
GND
Decoupling for CM4 5V inputs
+5V
CM4_5v
C1 100nF
C2 100nF
C3 100nF
C4 100nF
C5 100nF
C6 100nF
C7 1uF
C42 1uF
C47 10uF
GND

connect Wlan to gnd if off, and leave floating for on.
Please use a 2 pin connector here with a jumper cap. (has to be done)

**GLOBAL_EN needs to be pulled low for >1ms after software shutdown.**

**Title:**
Sheet: /CM4/CM4_Module1A/
Rev:
Author:
Date: | Size: A4 | Id: 5/20
File: CM4_Module1A.kicad_sch

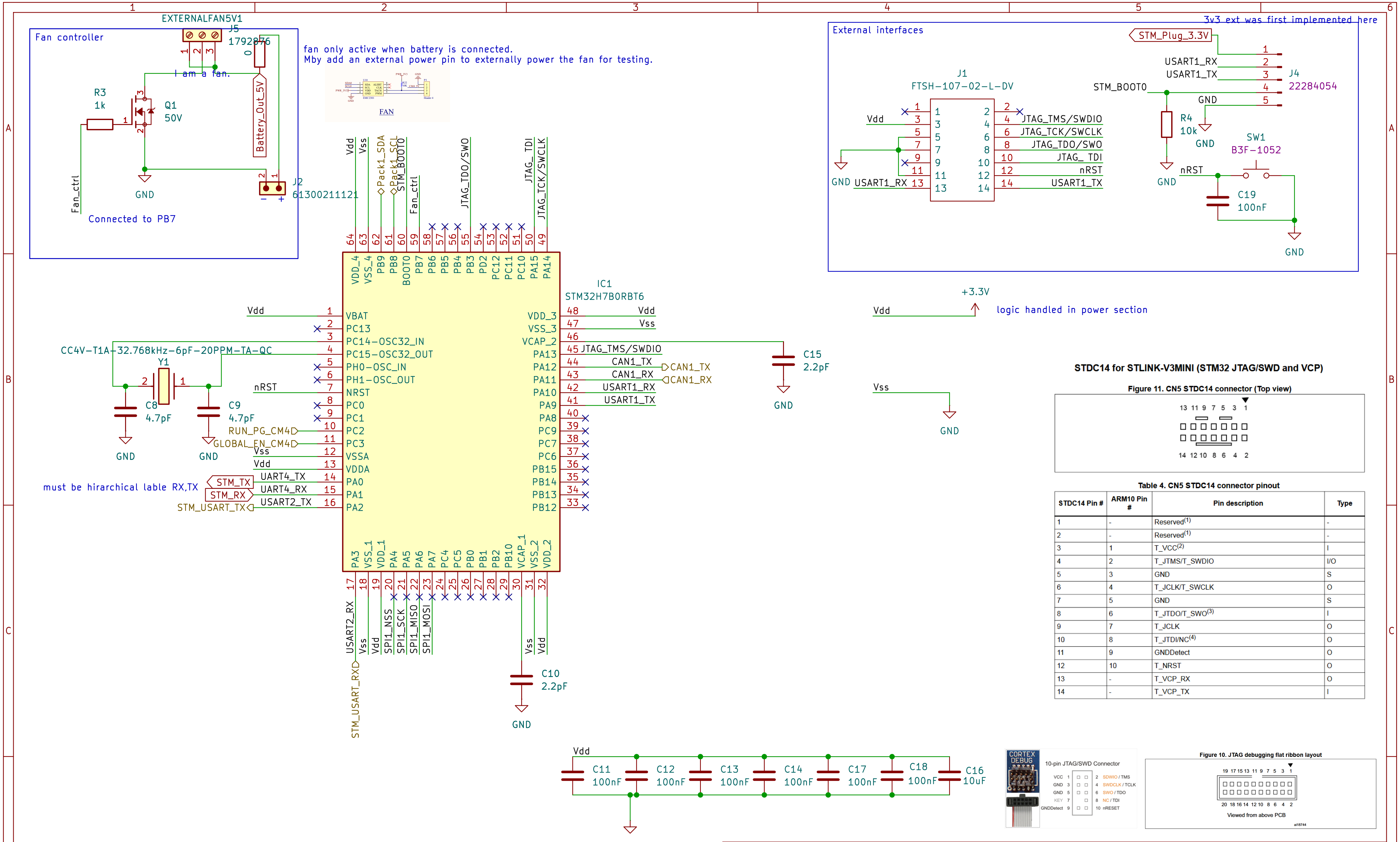
Fan controller
EXTERNALFAN5V1
J5
1792876
I am a fan.
R3
1k
Q1
50V
GND
Battery_Out_5V
Fan_ctrl
J2
61300211121
Connected to PB7
fan only active when battery is connected.
Mby add an external power pin to externally power the fan for testing.
FAN
Vdd
Vss
Pack1_SDA
Pack1_SCL
STM_BOOT0
Fan_ctrl
JTAG_TDO/SWO
JTAG_TDI
JTAG_TCK/SWCLK
IC1
STM32H7B0RBT6
VBAT
PC13
PC14-OSC32_IN
PC15-OSC32_OUT
PH0-OSC_IN
PH1-OSC_OUT
NRST
PC0
PC1
PC2
PC3
VSSA
VDDA
PA0
PA1
PA2
VDD_3
VSS_3
VCAP_2
PA13
PA12
PA11
PA10
PA9
PA8
PC9
PC8
PC7
PC6
PB15
PB14
PB13
PB12
VDD_4
VSS_4
PB9
PB8
BOOT0
PB7
PB6
PB5
PB4
PB3
PD2
PC12
PC11
PC10
PA15
PA14
PA3
VSS_1
VDD_1
PA4
PA5
PA6
PA7
PC4
PC5
PB0
PB1
PB2
PB10
VCAP_1
VSS_2
VDD_2
CC4V-T1A-32.768kHz-6pF-20PPM-TA-QC
Y1
C8
4.7pF
C9
4.7pF
nRST
RUN_PG_CM4
GLOBAL_EN_CM4
must be hirarchical lable RX,TX
STM_TX
STM_RX
UART4_TX
UART4_RX
USART2_TX
STM_USART_TX
USART2_RX
SPI1_NSS
SPI1_SCK
SPI1_MISO
SPI1_MOSI
STM_USART_RX
C10
2.2pF
JTAG_TMS/SWDIO
CAN1_TX
CAN1_RX
USART1_RX
USART1_TX
C15
2.2pF
C11
100nF
C12
100nF
C13
100nF
C14
100nF
C17
100nF
C18
100nF
C16
10uF
External interfaces
3v3 ext was first implemented here
STM_Plug_3.3V
J4
22284054
STM_BOOT0
R4
10k
SW1
B3F-1052
C19
100nF
J1
FTSH-107-02-L-DV
JTAG_TMS/SWDIO
JTAG_TCK/SWCLK
JTAG_TDO/SWO
JTAG_ TDI
nRST
USART1_TX
USART1_RX
+3.3V
logic handled in power section
STDC14 for STLINK-V3MINI (STM32 JTAG/SWD and VCP)
Figure 11. CN5 STDC14 connector (Top view)
10-pin JTAG/SWD Connector
VCC 1
GND 3
GND 5
KEY 7
GNDDetect 9
2 SDWIO / TMS
4 SWDCLK / TCLK
6 SWO / TDO
8 NC / TDI
10 nRESET
Figure 10. JTAG debugging flat ribbon layout
Viewed from above PCB
ai18744

Table 4. CN5 STDC14 connector pinout

| STDC14 Pin # | ARM10 Pin # | Pin description | Type |
|---|---|---|---|
| 1 | - | Reserved(1) | - |
| 2 | - | Reserved(1) | - |
| 3 | 1 | T_VCC(2) | I |
| 4 | 2 | T_JTMS/T_SWDIO | I/O |
| 5 | 3 | GND | S |
| 6 | 4 | T_JCLK/T_SWCLK | O |
| 7 | 5 | GND | S |
| 8 | 6 | T_JTDO/T_SWO(3) | I |
| 9 | 7 | T_JCLK | O |
| 10 | 8 | T_JTDI/NC(4) | O |
| 11 | 9 | GNDDetect | O |
| 12 | 10 | T_NRST | O |
| 13 | - | T_VCP_RX | O |
| 14 | - | T_VCP_TX | I |

**Title:**

Sheet: /STM/PinoutSTM/

Rev:

Author:

Date:

Size: A4

Id: 6/20

File: PinoutSTM.kicad_sch

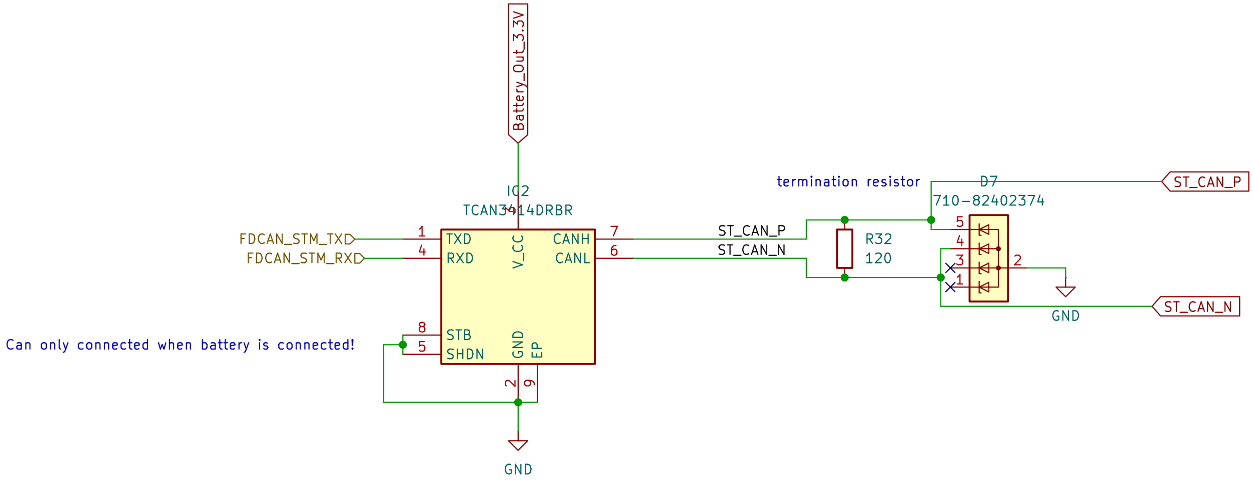
Battery_Out_3.3V
IC2
TCAN3414DRBR
FDCAN_STM_TXD
FDCAN_STM_RXD
1
4
TXD
RXD
V_CC
CANH
CANL
7
6
8
5
STB
SHDN
GND
EP
2
9
GND
ST_CAN_P
ST_CAN_N
R32
120
D7
710-82402374
5
4
3
1
2
GND
ST_CAN_P
ST_CAN_N

termination resistor

Can only connected when battery is connected!

**Title:**

Sheet: /STM/CAN_Interface/

Rev:

Author:

Date:

Size: A4

Id: 7/20

File: PowerSTM.kicad_sch

Can be kept floating. if no usb is connected

maybe RX and TX need to be switched

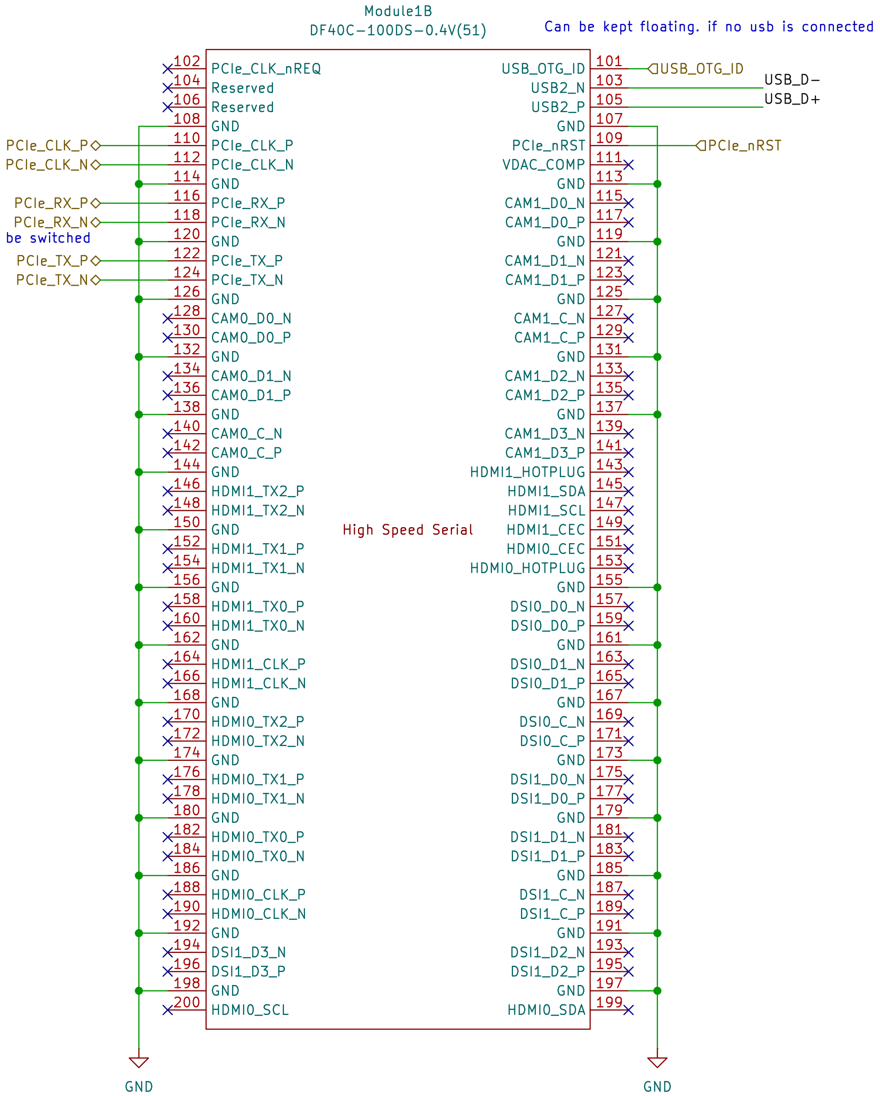
Module1B
DF40C-100DS-0.4V(51)
High Speed Serial
102 PCIe_CLK_nREQ
104 Reserved
106 Reserved
108 GND
110 PCIe_CLK_P
112 PCIe_CLK_N
114 GND
116 PCIe_RX_P
118 PCIe_RX_N
120 GND
122 PCIe_TX_P
124 PCIe_TX_N
126 GND
128 CAM0_D0_N
130 CAM0_D0_P
132 GND
134 CAM0_D1_N
136 CAM0_D1_P
138 GND
140 CAM0_C_N
142 CAM0_C_P
144 GND
146 HDMI1_TX2_P
148 HDMI1_TX2_N
150 GND
152 HDMI1_TX1_P
154 HDMI1_TX1_N
156 GND
158 HDMI1_TX0_P
160 HDMI1_TX0_N
162 GND
164 HDMI1_CLK_P
166 HDMI1_CLK_N
168 GND
170 HDMI0_TX2_P
172 HDMI0_TX2_N
174 GND
176 HDMI0_TX1_P
178 HDMI0_TX1_N
180 GND
182 HDMI0_TX0_P
184 HDMI0_TX0_N
186 GND
188 HDMI0_CLK_P
190 HDMI0_CLK_N
192 GND
194 DSI1_D3_N
196 DSI1_D3_P
198 GND
200 HDMI0_SCL
101 USB_OTG_ID
103 USB2_N
105 USB2_P
107 GND
109 PCIe_nRST
111 VDAC_COMP
113 GND
115 CAM1_D0_N
117 CAM1_D0_P
119 GND
121 CAM1_D1_N
123 CAM1_D1_P
125 GND
127 CAM1_C_N
129 CAM1_C_P
131 GND
133 CAM1_D2_N
135 CAM1_D2_P
137 GND
139 CAM1_D3_N
141 CAM1_D3_P
143 HDMI1_HOTPLUG
145 HDMI1_SDA
147 HDMI1_SCL
149 HDMI1_CEC
151 HDMI0_CEC
153 HDMI0_HOTPLUG
155 GND
157 DSI0_D0_N
159 DSI0_D0_P
161 GND
163 DSI0_D1_N
165 DSI0_D1_P
167 GND
169 DSI0_C_N
171 DSI0_C_P
173 GND
175 DSI1_D0_N
177 DSI1_D0_P
179 GND
181 DSI1_D1_N
183 DSI1_D1_P
185 GND
187 DSI1_C_N
189 DSI1_C_P
191 GND
193 DSI1_D2_N
195 DSI1_D2_P
197 GND
199 HDMI0_SDA
PCIe_CLK_P
PCIe_CLK_N
PCIe_RX_P
PCIe_RX_N
PCIe_TX_P
PCIe_TX_N
USB_OTG_ID
USB_D-
USB_D+
PCIe_nRST
GND
GND

ESD/EMP protection for the USB

Super important to not differ lengths or curve a lot with D+ and D-.
Also should have same hole counts (vias) and same length.

TPD4EUSB30DQAR3

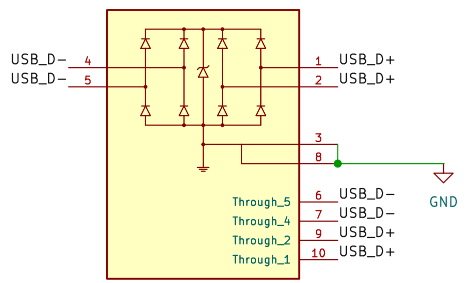
USB_D- 4
USB_D- 5
1 USB_D+
2 USB_D+
3
8
GND
Through_5 6 USB_D-
Through_4 7 USB_D-
Through_2 9 USB_D+
Through_1 10 USB_D+

old usb port for reference.

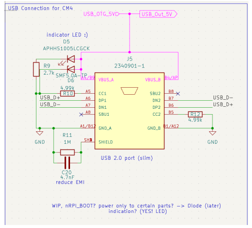

USB Connection for CM4

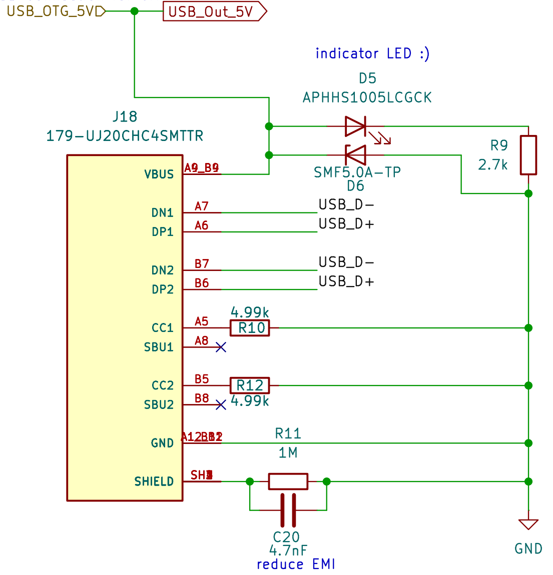
USB_OTG_5V
USB_Out_5V
indicator LED :)
D5
APHHS1005LCGCK
J18
179-UJ20CHC4SMTTR
R9
2.7k
SMF5.0A-TP
D6
VBUS A9_B9
DN1 A7 USB_D-
DP1 A6 USB_D+
DN2 B7 USB_D-
DP2 B6 USB_D+
CC1 A5 4.99k R10
SBU1 A8
CC2 B5 R12
SBU2 B8 4.99k
GND A12B12
R11
1M
SHIELD SH1
C20
4.7nF
reduce EMI
GND

WIP, nRPI_BOOT? power only to certain parts? -> Diode (later)
indication? (YES! LED)

**Title:**
Sheet: /CM4/CM4_Module1B/
Rev:
Author:
Date:
Size: A4
Id: 11/20
File: CM4_Module1B.kicad_sch

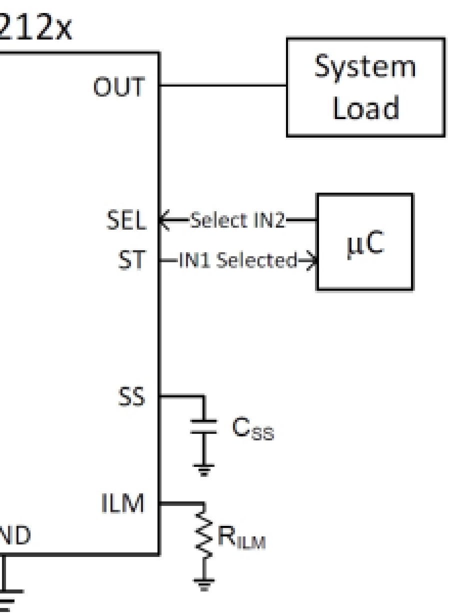
212x
OUT
System Load
SEL
Select IN2
ST
IN1 Selected
µC
SS
C_SS
ILM
R_ILM
ND

for questions about wiring etc please consult the datasheet...
https://www.ti.com/lit/ds/symlink/tps2120.pdf?ts=1761678178328

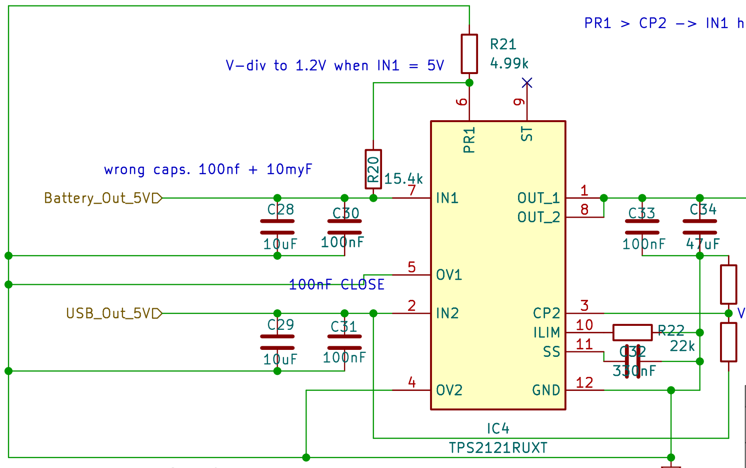
R21
4.99k
R20
15.4k
Battery_Out_5V
C28
10uF
C30
100nF
USB_Out_5V
C29
10uF
C31
100nF
6
9
PR1
ST
7
IN1
5
OV1
2
IN2
4
OV2
1
8
OUT_1
OUT_2
3
CP2
10
ILIM
11
SS
12
GND
IC4
TPS2121RUXT
C33
100nF
C34
47uF
CM4_In_5V
R22
22k
C32
330nF
R23
4.99k
R24
20k
GND

PR1 > CP2 -> IN1 has prio

V-div to 1.2V when IN1 = 5V

wrong caps. 100nf + 10myF

100nF CLOSE

V-div to 1V when IN2=5V

if the USB-only cold start "disconnects" we can try to bump SS to 470nF instead of 330nF.

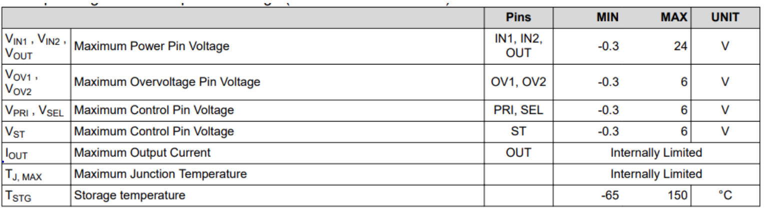

| | | Pins | MIN | MAX | UNIT |
|---|---|---|---|---|---|
| $V_{IN1}$, $V_{IN2}$, $V_{OUT}$ | Maximum Power Pin Voltage | IN1, IN2, OUT | -0.3 | 24 | V |
| $V_{OV1}$, $V_{OV2}$ | Maximum Overvoltage Pin Voltage | OV1, OV2 | -0.3 | 6 | V |
| $V_{PRI}$, $V_{SEL}$ | Maximum Control Pin Voltage | PRI, SEL | -0.3 | 6 | V |
| $V_{ST}$ | Maximum Control Pin Voltage | ST | -0.3 | 6 | V |
| $I_{OUT}$ | Maximum Output Current | OUT | Internally Limited | | |
| $T_{J, MAX}$ | Maximum Junction Temperature | | Internally Limited | | |
| $T_{STG}$ | Storage temperature | | -65 | 150 | °C |

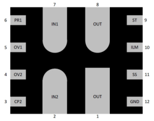
7
8
6
PR1
IN1
OUT
ST
9
5
OV1
ILM
10
4
OV2
SS
11
3
CP2
IN2
OUT
GND
12
2
1

Figure 6-2. TPS2121 (RUX) Package 12-Pin VQFN-HR Bottom View

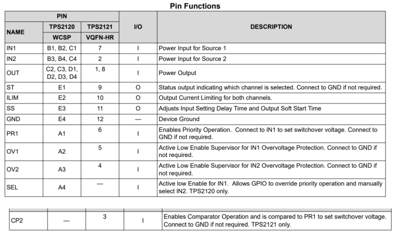

Pin Functions

| PIN | | | I/O | DESCRIPTION |
|---|---|---|---|---|
| NAME | TPS2120 WCSP | TPS2121 VQFN-HR | | |
| IN1 | B1, B2, C1 | 7 | I | Power Input for Source 1 |
| IN2 | B3, B4, C4 | 2 | I | Power Input for Source 2 |
| OUT | C2, C3, D1, D2, D3, D4 | 1, 8 | I | Power Output |
| ST | E1 | 9 | O | Status output indicating which channel is selected. Connect to GND if not required. |
| ILIM | E2 | 10 | O | Output Current Limiting for both channels. |
| SS | E3 | 11 | O | Adjusts Input Setting Delay Time and Output Soft Start Time |
| GND | E4 | 12 | — | Device Ground |
| PR1 | A1 | 6 | I | Enables Priority Operation. Connect to IN1 to set switchover voltage. Connect to GND if not required. |
| OV1 | A2 | 5 | I | Active Low Enable Supervisor for IN1 Overvoltage Protection. Connect to GND if not required. |
| OV2 | A3 | 4 | I | Active Low Enable Supervisor for IN2 Overvoltage Protection. Connect to GND if not required. |
| SEL | A4 | — | I | Active low Enable for IN1. Allows GPIO to override priority operation and manually select IN2. TPS2120 only. |
| CP2 | — | 3 | I | Enables Comparator Operation and is compared to PR1 to set switchover voltage. Connect to GND if not required. TPS2121 only. |

**Title:**
Sheet: /Power_logic/5V_Logic/
Rev:
Author:
Date:
Size: A4
Id: 12/20
File: 5V_Logic.kicad_sch

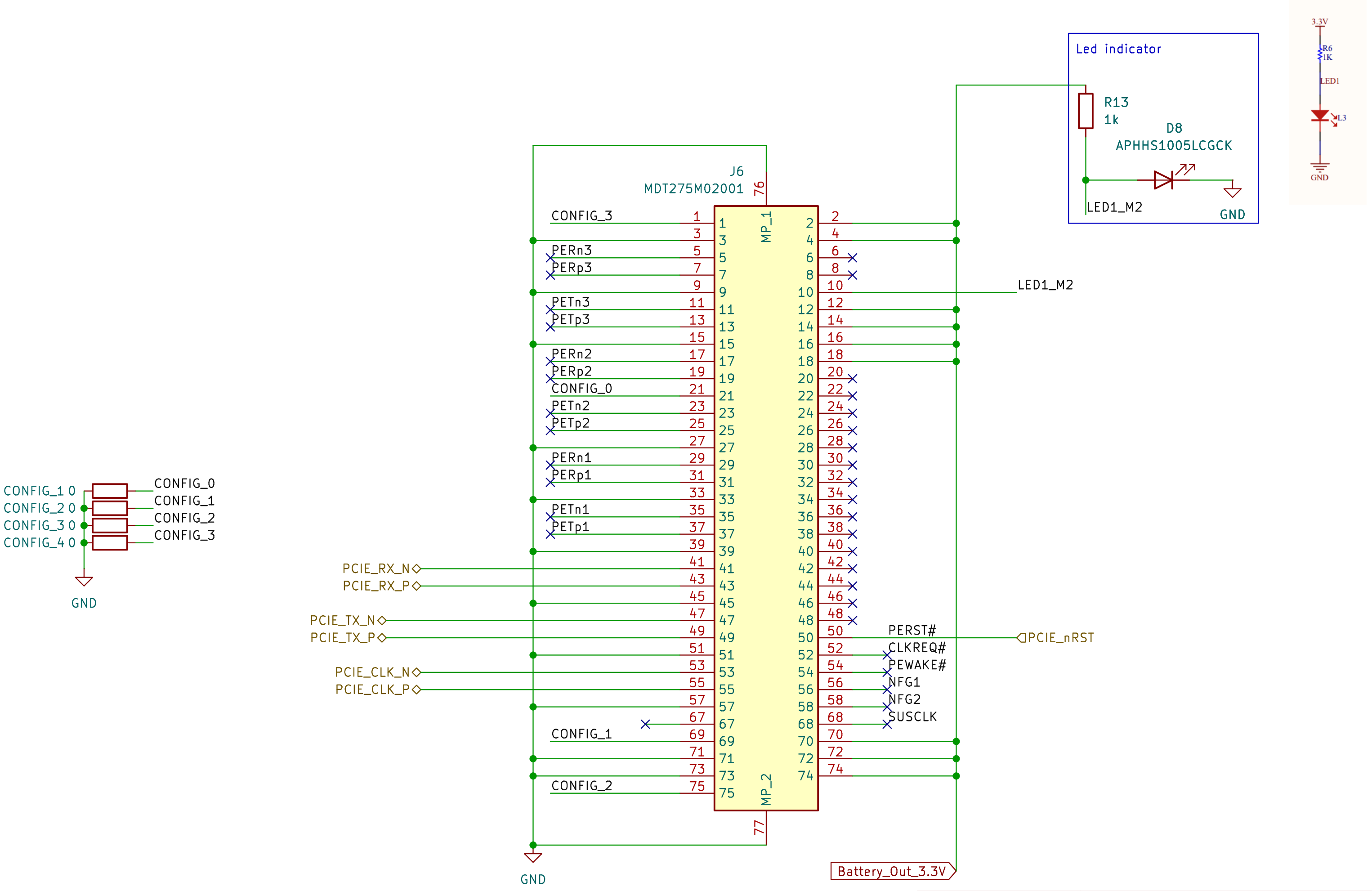
Led indicator
R13
1k
D8
APHHS1005LCGCK
LED1_M2
GND
3.3V
R6
1K
LED1
L3
GND
J6
MDT275M02001
MP_1
MP_2
76
77
CONFIG_3
PERn3
PERp3
PETn3
PETp3
PERn2
PERp2
CONFIG_0
PETn2
PETp2
PERn1
PERp1
PETn1
PETp1
CONFIG_1
CONFIG_2
PCIE_RX_N
PCIE_RX_P
PCIE_TX_N
PCIE_TX_P
PCIE_CLK_N
PCIE_CLK_P
LED1_M2
PERST#
CLKREQ#
PEWAKE#
NFG1
NFG2
SUSCLK
PCIE_nRST
Battery_Out_3.3V
GND
CONFIG_1 0
CONFIG_2 0
CONFIG_3 0
CONFIG_4 0
CONFIG_0
CONFIG_1
CONFIG_2
CONFIG_3
GND

**Title:**

Sheet: /CM4/PCIE_Interface/

Rev:

Author:

Date:

Size: A4

Id: 13/20

File: PCIE_Interface.kicad_sch

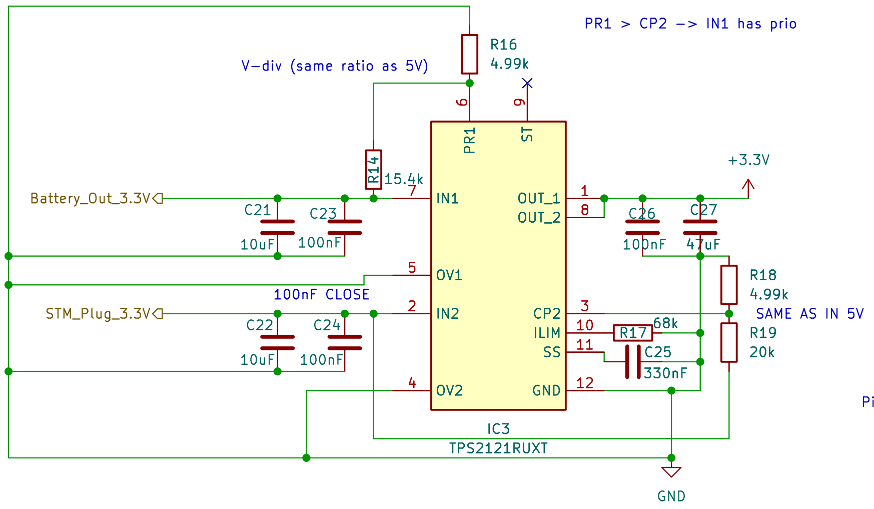
PR1 > CP2 --> IN1 has prio
V-div (same ratio as 5V)
R16
4.99k
6
9
PR1
ST
R14
15.4k
+3.3V
Battery_Out_3.3V
7
IN1
OUT_1
OUT_2
1
8
C21
C23
10uF
100nF
C26
C27
100nF
47uF
5
OV1
100nF CLOSE
R18
4.99k
SAME AS IN 5V
STM_Plug_3.3V
2
IN2
CP2
3
ILIM
10
R17
68k
SS
11
C25
330nF
R19
20k
C22
C24
10uF
100nF
4
OV2
GND
12
IC3
TPS2121RUXT
GND

if the USB–only cold start "disconnects" we
can try to bump SS to 470nF instead of 330nF.

Pin 10: 68k leads to about 1.72A (should be enough for STM)

[R] = [kOhm]   22 kΩ → ~4.55 A
65.2 / R^0.861   39 kΩ → ~2.78 A
50 kΩ → ~2.25 A
56 kΩ → ~2.04 A
68 kΩ → ~1.72 A
100 kΩ → ~1.24 A

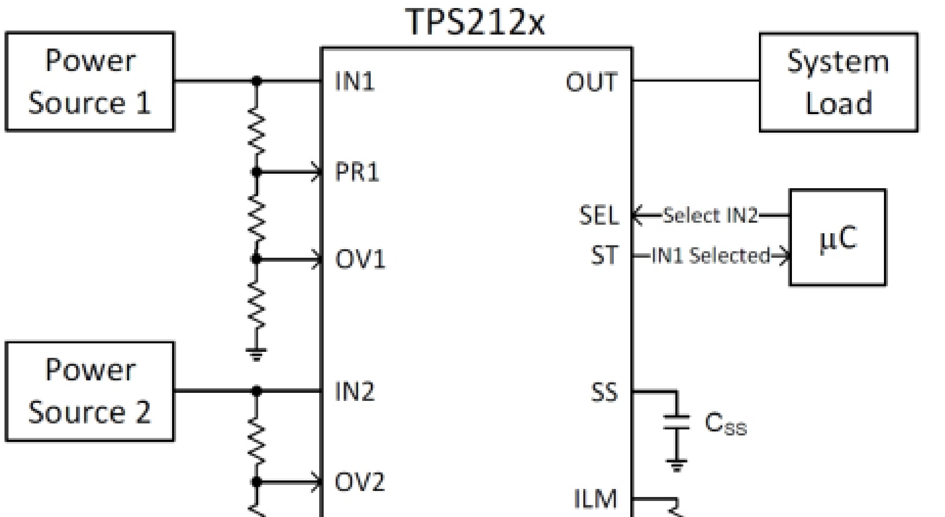
TPS212x
Power Source 1
IN1
OUT
System Load
PR1
SEL
Select IN2
ST
IN1 Selected
µC
OV1
Power Source 2
IN2
SS
C_SS
OV2
ILM

PR1 > CP2 -> IN1 has prio

V-div (same ratio as 5V)

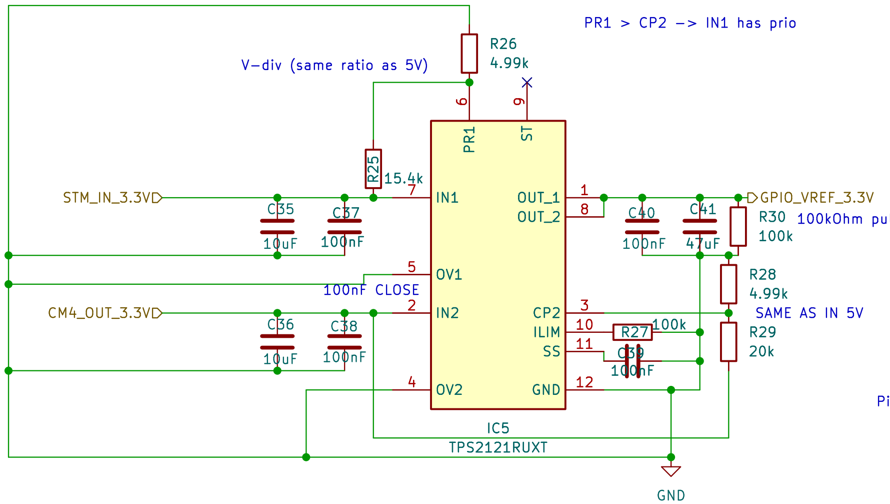
R26
4.99k
6
9
PR1
ST
R25
15.4k
STM_IN_3.3V
7
IN1
C35
10uF
C37
100nF
OUT_1
OUT_2
1
8
C40
100nF
C41
47uF
GPIO_VREF_3.3V
R30
100k
5
OV1
100nF CLOSE
CM4_OUT_3.3V
2
IN2
C36
10uF
C38
100nF
CP2
ILIM
SS
3
10
11
R27
100k
C39
100nF
R28
4.99k
R29
20k
4
OV2
GND
12
IC5
TPS2121RUXT
GND

100kOhm pulldown so Vref is low if everything is off (not floating)

SAME AS IN 5V

Pin 10: 100kOhm leads to about 1.24A (absolute overkill)

[R] = [kOhm]
65.2 / R^0.861

22 kΩ → ~4.55 A
39 kΩ → ~2.78 A
50 kΩ → ~2.25 A
56 kΩ → ~2.04 A
68 kΩ → ~1.72 A
100 kΩ → ~1.24 A

Pin SS (11): 100nF soft start cap more than enoug as virtually no load at all at vref

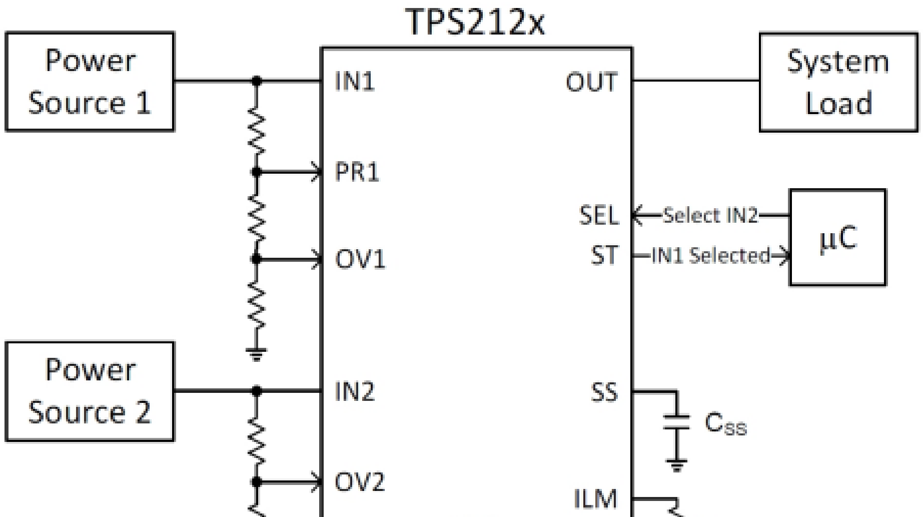
TPS212x
Power Source 1
IN1
OUT
System Load
PR1
SEL
Select IN2
ST
IN1 Selected
µC
OV1
Power Source 2
IN2
SS
$C_{SS}$
OV2
ILM

3V/
Rev:
Size: A4
Id: 16/20

PS –> 3.3V IIC
CSB1 –> 3.3V NOT SPI

PB8 on STM
PB9 on STM

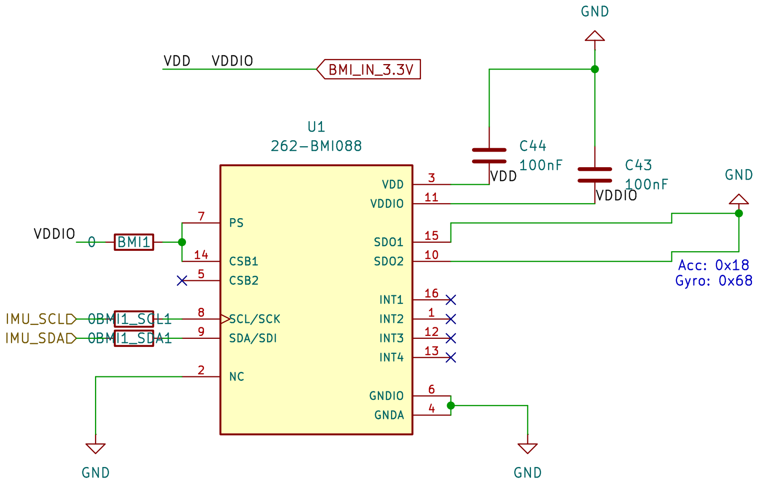
GND
VDD VDDIO
BMI_IN_3.3V
U1
262–BMI088
C44
100nF
VDD
C43
100nF
VDDIO
GND
VDDIO
0
BMI1
IMU_SCL
0
BMI1_SCL1
IMU_SDA
0
BMI1_SDA1
7
PS
14
CSB1
5
CSB2
8
SCL/SCK
9
SDA/SDI
2
NC
3
VDD
11
VDDIO
15
SDO1
10
SDO2
16
INT1
1
INT2
12
INT3
13
INT4
6
GNDIO
4
GNDA
GND
GND

Acc: 0x18
Gyro: 0x68

Accelerometer
SDO1 pin pulled to GND (0x18)
SDO1 pin pulled to VDDIO: (0x19)

Gyroscope:
SDO2 pin pulled to GND: (0x68)
SDO2 pin pulled to VDDIO: (0x69)

**Title:**
Sheet: /IMU/IMU1/
Rev:
Author:
Date:
Size: A4
Id: 19/20
File: IMU1.kicad_sch

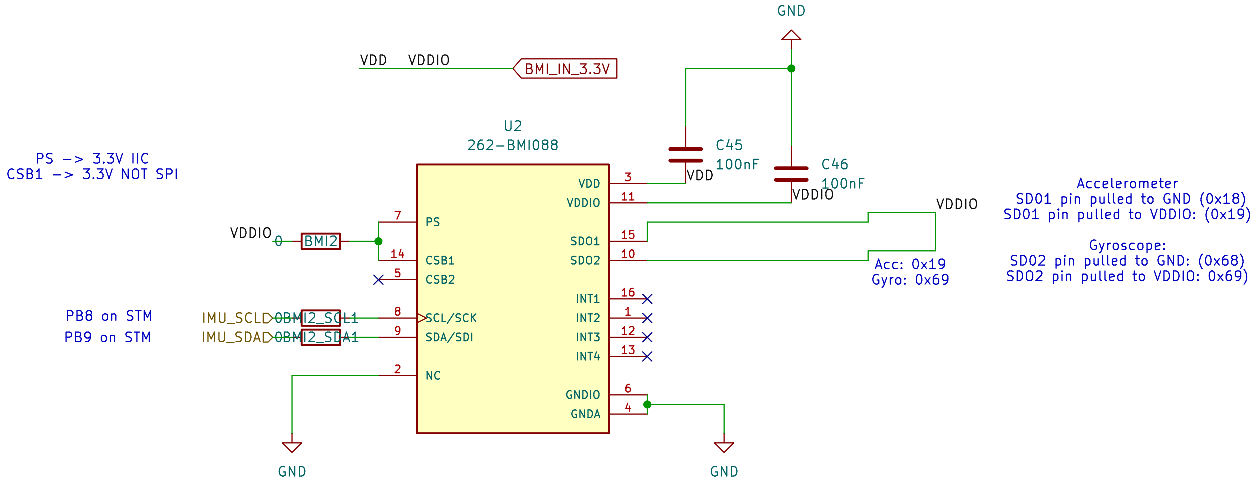
GND
VDD VDDIO
BMI_IN_3.3V
U2
262-BMI088
C45
100nF
C46
100nF
VDD
VDDIO
VDDIO
VDDIO
0
BMI2
IMU_SCLD
0BMI2_SCL1
IMU_SDAD
0BMI2_SDA1
7
PS
14
CSB1
5
CSB2
8
SCL/SCK
9
SDA/SDI
2
NC
3
VDD
11
VDDIO
15
SDO1
10
SDO2
16
INT1
1
INT2
12
INT3
13
INT4
6
GNDIO
4
GNDA
GND
GND

PS -> 3.3V IIC
CSB1 -> 3.3V NOT SPI

PB8 on STM
PB9 on STM

Acc: 0x19
Gyro: 0x69

Accelerometer
SDO1 pin pulled to GND (0x18)
SDO1 pin pulled to VDDIO: (0x19)

Gyroscope:
SDO2 pin pulled to GND: (0x68)
SDO2 pin pulled to VDDIO: (0x69)

**Title:**
Sheet: /IMU/IMU2/
Rev:
Author:
Date:
Size: A4
Id: 20/20
File: IMU2.kicad_sch

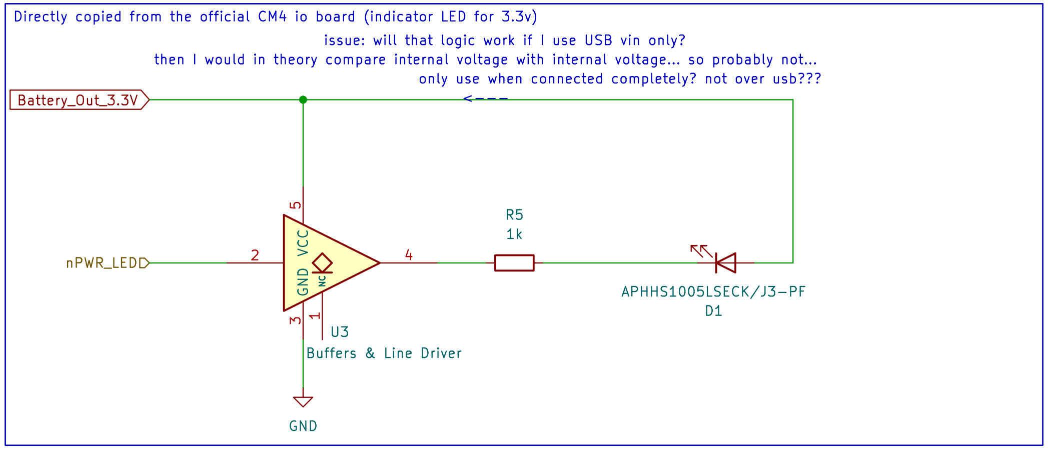

Directly copied from the official CM4 io board (indicator LED for 3.3v)

issue: will that logic work if I use USB vin only?
then I would in theory compare internal voltage with internal voltage... so probably not...
only use when connected completely? not over usb???

Battery_Out_3.3V
<---
nPWR_LEDD
2
5
VCC
GND
NC
4
3
1
U3
Buffers & Line Driver
R5
1k
APHHS1005LSECK/J3-PF
D1
GND

**Title:**

Sheet: /CM4/CM4_Module1A/CM4_LED1/

Rev:

Author:

Date:

Size: A4

Id: 8/20

File: CM4_LED1.kicad_sch

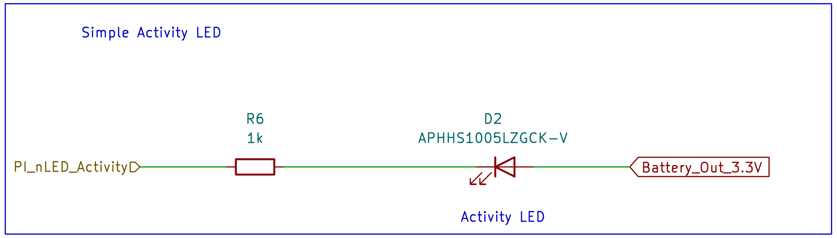
Simple Activity LED
R6
1k
D2
APHHS1005LZGCK-V
PI_nLED_Activity
Battery_Out_3.3V
Activity LED

**Title:**

Sheet: /CM4/CM4_Module1A/CM4_LED2/

Rev:

Author:

Date:

Size: A4

Id: 9/20

File: CM4_LED2.kicad_sch

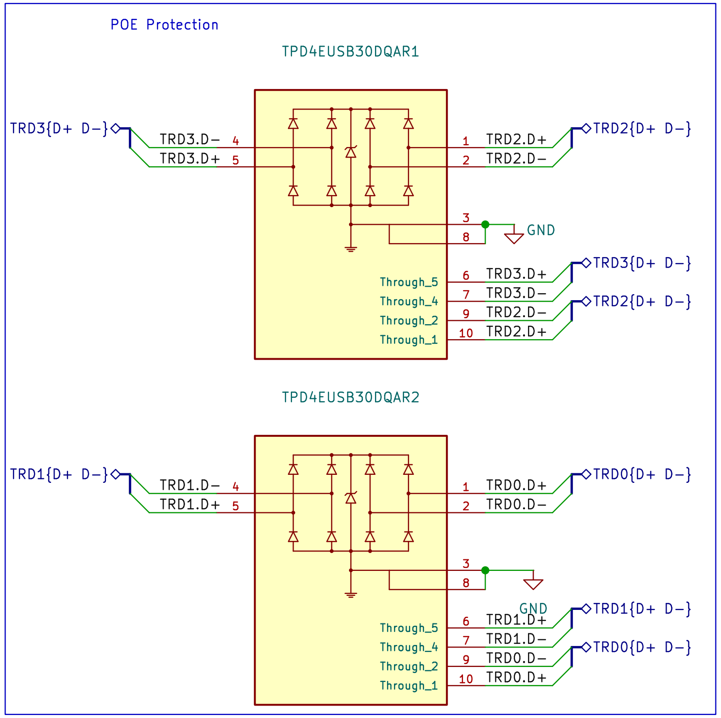
POE Protection
TPD4EUSB30DQAR1
TRD3{D+ D−}
TRD3.D− 4
TRD3.D+ 5
1 TRD2.D+
2 TRD2.D−
TRD2{D+ D−}
3
8
GND
Through_5
Through_4
Through_2
Through_1
6 TRD3.D+
7 TRD3.D−
9 TRD2.D−
10 TRD2.D+
TRD3{D+ D−}
TRD2{D+ D−}
TPD4EUSB30DQAR2
TRD1{D+ D−}
TRD1.D− 4
TRD1.D+ 5
1 TRD0.D+
2 TRD0.D−
TRD0{D+ D−}
3
8
GND
6 TRD1.D+
7 TRD1.D−
9 TRD0.D−
10 TRD0.D+
TRD1{D+ D−}
TRD0{D+ D−}

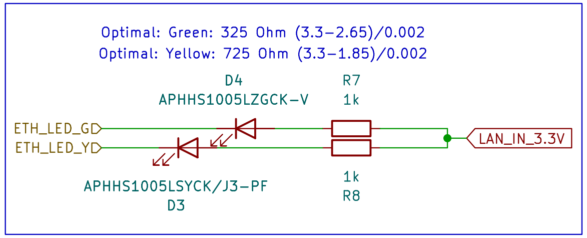
Optimal: Green: 325 Ohm (3.3−2.65)/0.002
Optimal: Yellow: 725 Ohm (3.3−1.85)/0.002
D4
APHHS1005LZGCK−V
R7
1k
ETH_LED_G
ETH_LED_Y
LAN_IN_3.3V
APHHS1005LSYCK/J3−PF
D3
1k
R8

**Title:**

Sheet: /CM4/CM4_Module1A/CM4_Ethernet/
Rev:
Author:
Date:
Size: A4
Id: 10/20
File: CM4_Ethernet.kicad_sch