DATA CENTER STORAGE

A Complete Training Guide

How Storage Works · Hardware · Wiring · Protocols · Technologies

Prepared for Training Sessions

Section 1: What Is Data Center Storage?

Data center storage is the collective hardware, software, systems, and processes used to store, manage, and distribute large amounts of digital information in a centralized computing environment.

1.1 What Gets Stored?

Data centers store five main categories of digital information:

- Web Content – HTML files, images, videos, databases for websites and online apps
- Business Data – Customer records, financial data, employee information, transaction logs
- Email & Communications – Email bodies, attachments, Slack/Teams logs and metadata
- Application & User Data – Social media profiles, purchase history, usage metrics
- Big Data & AI – Machine learning training datasets, IoT sensor feeds, analytics data

1.2 Why Is Storage So Important?

Reason	Explanation
Accessibility	Users and apps get instant data retrieval 24/7 — critical for banking, hospitals, e-commerce
Security	Encrypted storage, firewalls, and physical controls protect against breaches
Scalability	Organizations can grow storage without rebuilding infrastructure
Cost Efficiency	Economies of scale + deduplication + compression reduce overall cost
Compliance	HIPAA, GDPR and other regulations require encrypted, audited, access-controlled storage

Section 2: Hardware Components & Physical Layout

Understanding the physical building blocks of data center storage is the foundation of everything else. Let's walk from the smallest unit to the entire facility.

2.1 Storage Devices (The Building Blocks)

Device	Type	Capacity Range	Best Use
HDD (Hard Disk Drive)	Spinning magnetic disk	1 TB – 30+ TB	Bulk/archive storage, low cost
SSD (Solid-State Drive)	Flash memory (no moving parts)	1 TB – 32+ TB	High-speed databases, caching
NVMe SSD	Flash via PCIe bus	Up to 32 TB	Ultra-low latency AI/ML workloads
Tape Drive	Magnetic tape	Up to 45 TB/cartridge	Long-term archival, disaster recovery

2.2 Physical Hierarchy — From Drive to Data Center

Each storage device sits within a structured physical hierarchy:

```
┌──────────────────────────────────────────────────────────────────────────┐
│                          DATA CENTER FACILITY                            │
│  ┌──────────────────┐   ┌──────────────────┐   ┌──────────────────┐     │
│  │   DATA HALL 1    │   │   DATA HALL 2    │   │   DATA HALL 3    │     │
│  │                  │   │                  │   │                  │     │
│  │  ROW  ROW ROW    │   │  ROW  ROW ROW    │   │  ROW  ROW ROW    │     │
│  │   |    |   |     │   │   |    |   |     │   │   |    |   |     │     │
│  │ RACK RACK RACK   │   │ RACK RACK RACK   │   │ RACK RACK RACK   │     │
│  │   |    |   |     │   └──────────────────┘   └──────────────────┘     │
│  │ TRAY TRAY TRAY   │                                                   │
│  │   |    |   |     │                                                   │
│  │ HDD  SSD  SSD    │                                                   │
│  └──────────────────┘                                                   │
└──────────────────────────────────────────────────────────────────────────┘

CAPACITY:  Drive(1-30TB) -> Rack(1PB+) -> Hall(1-100PB) -> Facility(multi-PB)
```

Level-by-Level Breakdown

- Individual Drive: 1 TB – 30+ TB per device
- Storage Tray: Groups multiple drives; slides into a rack
- Rack / Cabinet: Holds 42–48 rack units (1U = 1.75 inches). A full rack of HDDs can hold 1+ PB
- Row: Multiple racks arranged side by side; connected by cables running under the raised floor or overhead
- Data Hall: A room containing many rows; one hall = 1 petabyte and above

- Data Center Facility: Multiple halls = multi-petabyte capacity

🏭 Real-World Example

Microsoft's Washington State data center uses racks of HDD JBODs (Just a Bunch Of Disks).

Meta's AI Research SuperCluster (Phase 1) includes 175 PB bulk + 46 PB cache + 10 PB NFS storage.

TikTok stores ~470 PB and Spotify ~460 PB — all with Google Cloud infrastructure.

AWS (Amazon) holds the world's largest storage capacity: hundreds of exabytes, possibly zettabytes.

Section 3: Wiring & Cabling — How Storage Gets Connected

Cables are the nervous system of data center storage. The type of cable determines speed, distance, and what protocols can run over it.

3.1 Cable Types Used in Data Center Storage

Cable Type	Used For	Max Speed	Max Distance	Common Protocol
Fibre Channel (FC)	SAN backbone	128 Gbps	10 km (single-mode)	Fibre Channel Protocol
Cat6/Cat6A Ethernet	NAS, iSCSI, FCoE	10 Gbps	100 m	TCP/IP, iSCSI, SMB
25/100G Ethernet	High-speed NAS/SAN	100 Gbps+	100 m	NVMe-oF, iSCSI
SATA Cable	DAS (HDD/SSD inside server)	6 Gbps	1 m (internal)	SATA III
SAS Cable	DAS enterprise drives	22.5 Gbps	10 m	SAS (Serial Attached SCSI)
PCIe (slot/riser)	NVMe SSD to CPU	128 GB/s (PCIe 5.0)	Internal only	NVMe
Twinax Copper DAC	Short-range SAN/NAS links	100 Gbps	7 m	FC, Ethernet

3.2 Cable Routing in a Data Center

Cables travel through two main pathways:

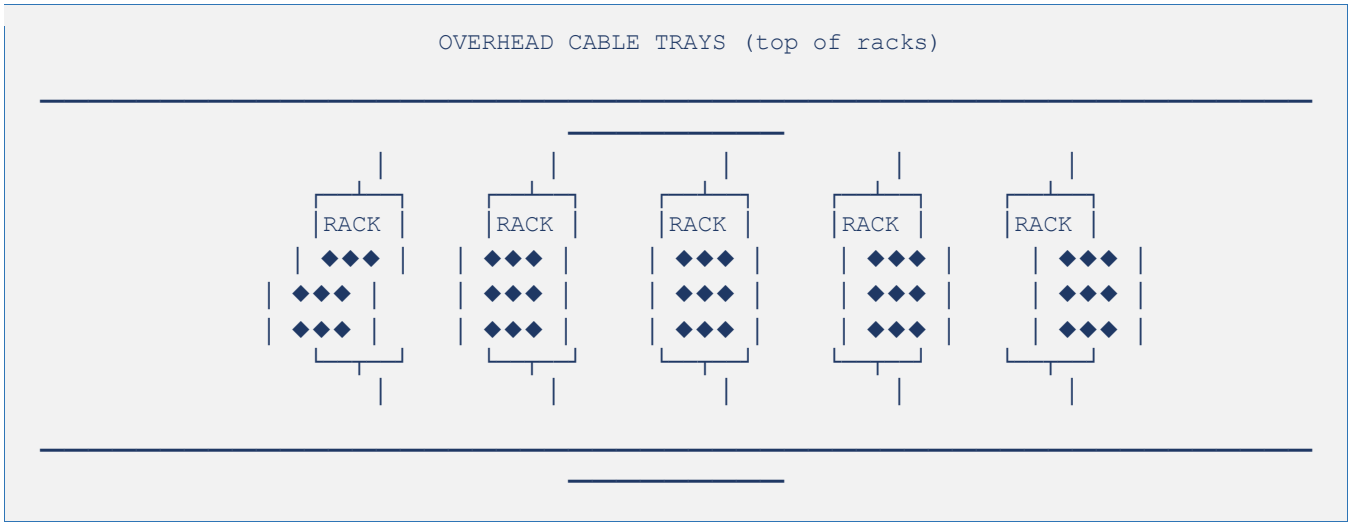

```
RAISED FLOOR CABLE TRAYS (under the floor for power + data)
```

- Raised Floor (under-floor): Power cables, copper Ethernet, older FC cables; allows cool air flow
- Overhead Trays: Fibre channel, DAC, high-speed patch cables; easier to manage and trace
- In-Rack: Short SATA/SAS cables connect drives directly inside the chassis

Section 4: The Three Storage Architectures (DAS · NAS · SAN)

Servers access storage in three fundamentally different ways. Understanding each architecture is essential for designing the right solution.

4.1 Direct-Attached Storage (DAS)

The simplest model: drives physically installed inside or directly cabled to one server. No network involved.

```
┌──────────────────────┐              ┌──────────────────────┐
│   APPLICATION        │              │   STORAGE DEVICES    │
│      SERVER          │◄──SATA──►    │   [HDD] [HDD] [SSD]  │
│                      │   /SAS       │   [SSD] [HDD] [SSD]  │
│  [CPU] [RAM]         │              │                      │
│  [RAID Controller]   │              │   RAID Controller    │
└──────────────────────┘              └──────────────────────┘

◄── CABLE: SATA (6 Gbps) or SAS (22.5 Gbps) ──────────►
◄── PROTOCOL: Block-level (server OS sees it as a local disk)►
```

How DAS Works — Step by Step

1. Application on the server requests a file (e.g., read database row)
2. Server OS sends a block-level read command via SATA or SAS controller
3. RAID controller translates the command and identifies which physical drive contains the blocks
4. Drive's read/write head (HDD) or flash cells (SSD) retrieve the data
5. Data travels back through SATA/SAS cable to the server RAM
6. Application receives the data

🔌 DAS Wiring Details

SATA Cable: 7-pin data connector + 15-pin power connector; up to 1 meter; used for desktop/1U servers

SAS Cable: Multi-lane connector (SFF-8644 or SFF-8087); up to 10 meters; used for enterprise servers

RAID Controller Card: PCIe card inside the server; manages all drive communication and redundancy

Backplane: A passive PCB board inside the chassis that connects all drive bays to the RAID card

✅ DAS Advantages	❌ DAS Disadvantages
Low cost; simple setup; no network needed	Only one server can access storage
Fastest latency (no network hops)	Limited scalability — tied to server's slots

Great for video editing, single-server databases	If server fails, storage also becomes inaccessible

4.2 Network-Attached Storage (NAS)

NAS connects storage to a standard Ethernet network, allowing MULTIPLE servers and users to share files simultaneously.

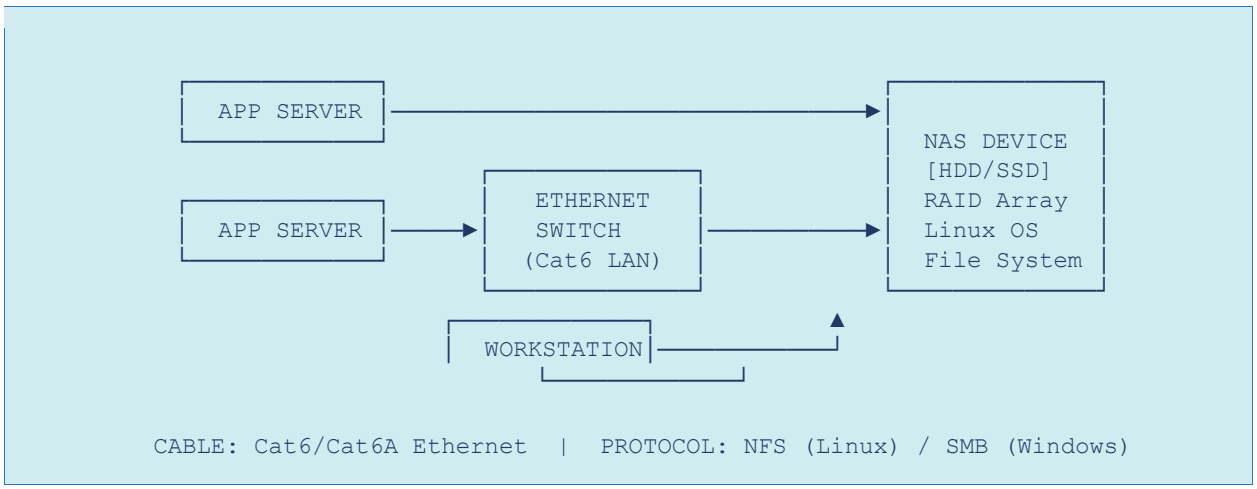

How NAS Works — Step by Step

7. User or application requests a file (e.g., open shared spreadsheet)
8. Request travels over Ethernet (Cat6) cable to the Ethernet Switch
9. Switch forwards the packet to the NAS device's IP address
10. NAS OS (embedded Linux) receives the file-level request via NFS or SMB protocol
11. NAS file system locates the file on the internal RAID array
12. NAS sends the file data back over Ethernet to the requesting machine

🔌 NAS Wiring Details

Ethernet Cable (Cat6A): 8-wire twisted-pair; RJ-45 connectors; up to 100 m per segment
SFP+ / SFP28 Module: For 10G/25G connections; fibre or DAC cables plug into NAS and switch
Ethernet Switch (ToR): Top-of-Rack switch aggregates all server and NAS connections
NAS Internal: SATA/SAS backplane connects internal drives to NAS controller; same as DAS inside the box

✅ NAS Advantages	❌ NAS Disadvantages
Multiple users/servers share files simultaneously	Slower than DAS due to network latency
Easy to expand (add more NAS units)	Network traffic competes with other data traffic
Cross-platform: Windows, Linux, macOS all connect	Not ideal for high-IOPS database workloads

4.3 Storage Area Network (SAN)

SAN is a DEDICATED high-speed network exclusively for storage traffic. It separates storage communication completely from regular business network traffic.

```
                          ┌──────────────┐
                          │  SERVER 1    │──[HBA]──┐
                          └──────────────┘         │
                                                   ▼
┌──────────────┐   ┌──────────────────┐   ┌──────────────────────┐
│  SERVER 2    │──▶│  FIBRE CHANNEL   │──▶│    STORAGE ARRAY     │
└──────────────┘   │      SWITCH      │   │  ┌──┐ ┌──┐ ┌──┐ ┌──┐ │
                   │  (FC Switch)     │   │  │HDD│ │SSD│ │SSD│ │HDD│ │
                   └──────────────────┘   │  └──┘ └──┘ └──┘ └──┘ │
┌──────────────┐                          │                      │
│  SERVER 3    │──[HBA]──▶────────────────▶│  RAID / Storage OS   │
└──────────────┘                          └──────────────────────┘

        CABLE: Fibre Channel (LC/SC fibre or DAC Twinax)
PROTOCOL: Fibre Channel (FC), iSCSI, FCoE   ACCESS: Block-level
```

SAN Hardware Components

- Host Bus Adapter (HBA): A PCIe card installed inside each server. It converts server commands into Fibre Channel frames and physically connects to the SAN via FC cables.
- Fibre Channel Switch: Dedicated switch ONLY for storage traffic (e.g., Brocade, Cisco MDS). Runs at 16/32/64/128 Gbps. Acts like an Ethernet switch but for FC.
- Storage Array: A rack-mounted box with many HDDs/SSDs in RAID configurations. Has its own controller, cache, and management interface.
- Fibre Channel Cables: Usually LC-LC duplex multimode fibre (orange jacket for OM3/OM4) inside data centers, or single-mode for longer distances.
- Interconnects: FC hubs, bridges, routers for connecting different fabric segments or legacy devices.

How SAN Works — Step by Step

13. Application on Server 1 requests data (e.g., read 4KB database block at LBA 00042F)
14. Server OS sends a SCSI command to the HBA (Host Bus Adapter card)
15. HBA wraps the SCSI command in a Fibre Channel frame and sends it via FC cable
16. FC Switch receives the frame, reads the destination WWN (World Wide Name), and routes to the Storage Array
17. Storage Array's controller receives the frame, translates it, and reads the correct blocks from the disk
18. Data is returned in FC frames through the switch back to the HBA on Server 1
19. HBA unwraps the FC frame, passes raw blocks to the server OS
20. Server OS presents the blocks to the application — it looks like a local disk

🔌 SAN Wiring Details

Multimode Fibre (OM3/OM4): Orange jacket; up to 300m–400m at 32 Gbps; LC connectors at each end

Single-mode Fibre (OS2): Yellow jacket; up to 10+ km; used for campus or city-wide SANs

SFP/SFP+ Transceivers: Pluggable modules on HBA and FC switch that convert electrical to optical
DAC Twinax Copper: Short-range (up to 7m) direct attach cable; cheaper than fibre for rack-to-rack
iSCSI Alternative: Uses regular Cat6 Ethernet cable and TCP/IP — cheaper but slightly higher latency

✅ SAN Advantages	❌ SAN Disadvantages
Highest performance: low latency, high IOPS	Most expensive: FC switches + HBAs + arrays
Dedicated network = no traffic competition Scales to millions of devices (switched fabric)	Complex setup; requires trained SAN administrators Vendor-specific configs can create lock-in
Used by large enterprises, hospitals, financial firms	Overkill for small organizations

Section 5: DAS vs NAS vs SAN — Full Comparison

Feature	DAS	NAS	SAN
Connectivity	SATA/SAS cable, no network	TCP/IP Ethernet (LAN)	Dedicated FC / iSCSI network
Cable Used	SATA, SAS	Cat6, Cat6A, SFP+	Fibre (LC), Twinax DAC
Protocols	SATA, SCSI, SAS	NFS, SMB/CIFS, HTTP	FC, iSCSI, FCoE, NVMe-oF
Data Access	Block-level	File-level	Block-level
Performance	Fast (direct connection)	Medium (depends on LAN)	Very high (dedicated)
Scalability	Low (tied to 1 server)	Medium (add NAS units)	Very high (millions of devices)
Shared Access	No (single server only)	Yes (many users)	Yes (many servers)
Distance	Same server/room only	Building/campus	Miles (single-mode fibre)
Cost	Low ($0.01–$0.10/GB)	Medium ($0.05–$0.20/GB)	High ($0.10–$0.25/GB+)
Best For	Individual workstations, small servers	File sharing, SMB environments	Large enterprise, databases, VMs

Section 6: Storage Protocols — How Data Talks

Protocols are the languages that servers and storage devices use to communicate. Different storage architectures use different protocols.

6.1 Block-Level Protocols (DAS & SAN)

- SATA (Serial ATA): Consumer/desktop interface; 6 Gbps max; used for DAS inside servers
- SAS (Serial Attached SCSI): Enterprise DAS; 22.5 Gbps; more reliable, used in servers and external arrays
- Fibre Channel (FC): The gold standard for SAN; runs on dedicated fibre; 16/32/64/128 Gbps speeds
- iSCSI: SCSI commands wrapped in TCP/IP; runs on normal Ethernet; cheaper SAN alternative
- FCoE (Fibre Channel over Ethernet): FC protocol running over 10G/25G Ethernet; convergence of SAN and LAN
- NVMe: PCIe-based protocol for SSDs inside servers; lowest possible latency (~50 microseconds)
- NVMe-oF (NVMe over Fabrics): NVMe performance over a network (Ethernet or FC); emerging next-gen SAN

6.2 File-Level Protocols (NAS)

- NFS (Network File System): Standard for Linux/Unix environments; runs over TCP/IP Ethernet
- SMB/CIFS (Server Message Block): Windows file sharing protocol; used by Windows Server for NAS
- HTTP/HTTPS: Web-based access to NAS; used for object storage and web-facing storage
- FTP/SFTP: File Transfer Protocol; used for bulk file transfers to/from NAS

Protocol	Layer	Speed	Where Used
NVMe	PCIe Bus	128 GB/s	Inside server (SSD to CPU)
Fibre Channel	FC Network	128 Gbps	Enterprise SAN
SAS	DAS Cable	22.5 Gbps	Server to external drive array
iSCSI	Ethernet/TCP	25–100 Gbps	SAN over standard network
SATA	DAS Cable	6 Gbps	Consumer/small business DAS
NFS / SMB	Ethernet/TCP	1–100 Gbps	NAS file sharing

Section 7: Data Flow — End-to-End Storage Journey

Let's trace exactly what happens when a user saves a file, from the moment they hit 'Save' to the moment the bits land on a physical disk.

7.1 Complete Data Flow Diagram

```
                          USER CLICKS 'SAVE'
                                   │
                                   ▼
┌──────────────────────────────────────────────────────────────────┐
│  APPLICATION LAYER  (Word, Database, Web App)                    │
│  → Generates write request: 'Save file X, size 4MB'              │
└──────────────────────────────────────────────────────────────────┘
                                   │
                                   ▼
┌──────────────────────────────────────────────────────────────────┐
│  OPERATING SYSTEM (File System Layer)                            │
│  → Breaks data into blocks (e.g., 4KB each) → assigns LBAs       │
│  → Sends I/O command to storage driver (SATA/FC/iSCSI driver)    │
└──────────────────────────────────────────────────────────────────┘
                                   │
                                   ▼
┌──────────────────────────────────────────────────────────────────┐
│  STORAGE CONTROLLER (RAID Card / HBA / NIC)                      │
│  → Applies RAID logic (striping / mirroring)                     │
│  → Encodes data in protocol (SATA frame / FC frame / TCP packet)│
└──────────────────────────────────────────────────────────────────┘
                                   │
                                   ▼
┌──────────────────────────────────────────────────────────────────┐
│  CABLE / NETWORK  (SATA wire / FC fibre / Ethernet)              │
│  → Physical transmission of bits (electrical or photonic signal) │
└──────────────────────────────────────────────────────────────────┘
                                   │
                                   ▼
┌──────────────────────────────────────────────────────────────────┐
│  SWITCH / BACKPLANE                                              │
│  DAS: no switch; SAN: FC switch routes to array; NAS: Eth switch │
└──────────────────────────────────────────────────────────────────┘
                                   │
                                   ▼
┌──────────────────────────────────────────────────────────────────┐
│  STORAGE ARRAY / NAS / DRIVE                                     │
│  → Controller receives and decodes frames                        │
│  → Writes blocks to HDD platters or SSD flash cells              │
│  → Sends ACK (acknowledgement) back to server                    │
└──────────────────────────────────────────────────────────────────┘

                ✓  DATA IS NOW PERMANENTLY STORED ON DISK
```

7.2 What Happens Inside the HDD

- Spindle motor spins the platters at 7,200 or 10,000 RPM
- Actuator arm moves read/write head to the correct track
- Head detects/changes magnetic orientation of tiny spots on the platter
- 1 = magnetized spot; 0 = un-magnetized spot
- A 4TB HDD has over 1 TRILLION such spots across multiple platters

7.3 What Happens Inside an SSD

- No moving parts — data stored in NAND flash cells
- Each cell stores 1 bit (SLC), 2 bits (MLC), 3 bits (TLC), or 4 bits (QLC)
- NVMe controller manages wear leveling to prevent premature cell failure
- Read latency: ~100 microseconds for SATA SSD; ~50 microseconds for NVMe

Section 8: RAID — Redundancy and Performance

RAID (Redundant Array of Independent Disks) combines multiple drives into one logical unit to achieve redundancy, performance, or both. RAID is used in DAS, NAS, and SAN alike.

RAID Level	How It Works	Min Drives	Can Survive	Use Case
RAID 0	Striping: data split across all drives	2	No fault tolerance	Speed-only; video editing temp storage
RAID 1	Mirroring: exact copy on 2nd drive	2	1 drive failure	OS drives, critical single-server data
RAID 5	Striping + distributed parity blocks	3	1 drive failure	NAS arrays, general enterprise storage
RAID 6	Striping + dual distributed parity	4	2 drive failures	Large disk arrays, archival
RAID 10	Mirror + Stripe (RAID 1 + RAID 0)	4	1 per mirror set	High-performance databases, VMs, SAN

Section 9: Storage Virtualization & Cloud Storage

9.1 Storage Virtualization

Storage virtualization abstracts physical drives from multiple storage arrays across the network into a single, unified virtual pool. IT admins see ONE large storage pool, even if the underlying hardware is from different vendors.

Type	Where It Runs	Best For
Host-Based	Software runs on each server (logical volumes)	Server-level mirroring, simple volume management
Array-Based	Firmware inside the storage array hardware	Single-vendor environments; snapshot/clone
Network-Based	Dedicated appliance between servers and SAN	Multi-vendor SAN pooling; data migration

9.2 Cloud Storage

Cloud storage moves physical storage to remote data centers managed by Cloud Service Providers (CSPs). Organizations access their data over the internet.

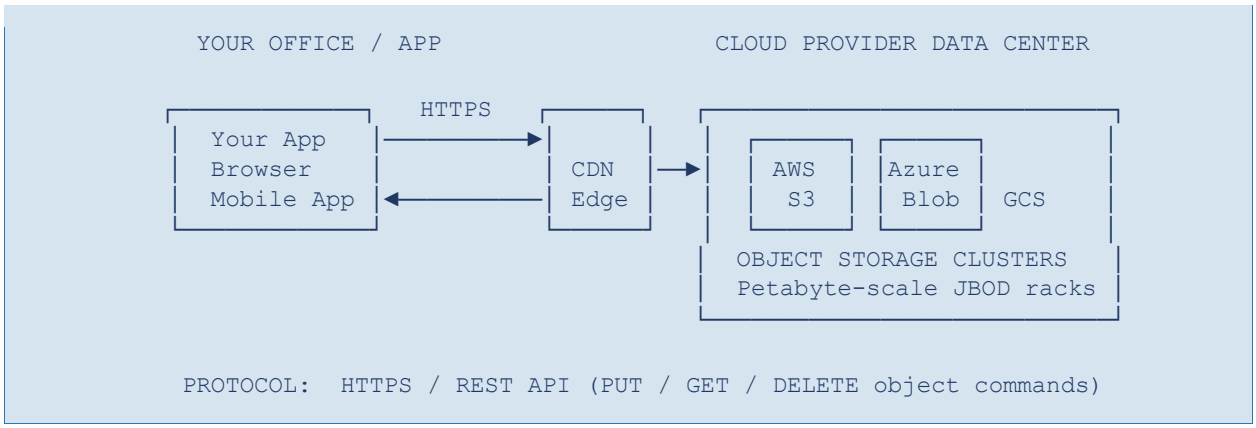

Major Cloud Storage Products

- AWS S3 (Simple Storage Service): Object storage; unlimited capacity; pay-per-GB
- Azure Blob Storage: Microsoft's object storage; hot/cool/archive tiers
- Google Cloud Storage (GCS): Unified object storage with strong consistency
- Oracle Object Storage: Unlimited capacity with auto-tiering
- IBM Cloud Object Storage: High-durability across geo-separated locations

Section 10: Next-Generation Storage Technologies

Technology	What It Is	Why It Matters
All-Flash Arrays (AFA)	Entire storage array built only from SSDs; no HDDs	10x–100x lower latency vs HDD arrays; ideal for AI/ML, databases
NVMe-oF	NVMe protocol extended over Fibre Channel or RDMA Ethernet	Near-local NVMe performance over a SAN — sub-100µs latency
Software-Defined Storage (SDS)	Software layer decoupled from hardware manages all storage	Hardware-agnostic flexibility; used by Google, Meta, Amazon internally
Hyper-Converged Infra (HCI)	Single appliance combines compute + storage + networking	Simplifies management; scales by adding nodes (e.g., Nutanix, VMware vSAN)
HAMR (Heat-Assisted Mag. Recording)	Laser heats recording spot on HDD platter before writing	Enables 30TB–100TB+ HDDs; keeps HDD competitive with SSDs on $/GB
Object Storage Platforms	Flat namespace with unique IDs (not folders); scale to exabytes	Ideal for unstructured data: images, videos, backups, AI datasets

Section 11: Market Size & Cost of Data Center Storage

11.1 Global Market Facts

- Global data generated: grew from 20 ZB (2016) → 106 ZB (2022) → projected 291 ZB by 2027 (22% CAGR)
- Global storage market revenue: $48 billion (2023) → $62.6 billion by 2028 (5.5% CAGR)
- On-premises enterprise storage = ~80% of market; cloud storage = ~20%
- Corporate data in the cloud: 30% in 2015 → over 60% today

11.2 Cost per Gigabyte (Raw Storage)

Storage Type	Cost Range ($/GB)	Notes
HDD (Hard Disk Drive)	$0.01 – $0.10 per GB	Best $/GB; used for bulk/cold storage
SSD (Solid-State Drive)	$0.04 – $0.20 per GB	Higher cost justified by speed
Hybrid Flash Array (HFA)	$0.05 – $0.25 per GB	Mix of HDD and SSD; balance of cost/speed
Tape (LTO-9)	$0.002 – $0.01 per GB	Cheapest; offline; used for archive only

💡 **Total Cost of Ownership (TCO)**

The per-GB price is only the RAW hardware cost. TCO includes:

- Power & Cooling: Storage draws significant power; cooling adds ~40% to power costs
- Maintenance & Support: Annual maintenance contracts (typically 10–15% of hardware cost)
- Software & Licensing: Storage management software, backup software, SAN fabric management
- Data Center Space: Rack space in colocation facilities is billed per rack unit or kW of power
- Staff: SAN administrators are specialist roles; training and salary add significant TCO

Section 12: Key Companies in Data Center Storage

Category	Company	What They Make/Do
Cloud Service Provider	AWS	S3, EBS, EFS — largest storage footprint globally (100s of exabytes)
Cloud Service Provider	Microsoft Azure	Blob Storage, Azure Files, Azure Disk Storage
Cloud Service Provider	Google Cloud	GCS, Persistent Disk, Filestore
Storage Hardware	Dell EMC	PowerStore, PowerMax, Unity XT — enterprise storage arrays
Storage Hardware	NetApp	AFF (All-Flash), ONTAP OS — popular in enterprise NAS and SAN
Storage Hardware	Pure Storage	FlashArray, FlashBlade — all-NVMe arrays
Drive OEM	Seagate	HAMR HDDs, Exos enterprise drives
Drive OEM	Western Digital	Gold/Ultrastar HDDs, WD RED NAS drives
Virtualization SW	VMware	vSAN (Software-Defined Storage), vSphere for VM storage management
Hyper-Convergence	Nutanix	HCI — combines compute, storage, networking on standard servers
Colocation	Equinix / Digital Realty	Rent rack space; customer brings own storage hardware

Section 13: Quick Reference Summary — Training Cheat Sheet

Key Terms at a Glance

Term	Meaning
HDD	Hard Disk Drive — magnetic spinning platters; cheap $/GB; slower than SSD
SSD	Solid-State Drive — NAND flash cells; no moving parts; fast; more expensive
NVMe	Non-Volatile Memory Express — fastest SSD protocol; uses PCIe bus
RAID	Redundant Array of Independent Disks — combines drives for speed/redundancy
DAS	Direct-Attached Storage — cable from server to drive; no network
NAS	Network-Attached Storage — shared file server on Ethernet LAN
SAN	Storage Area Network — dedicated high-speed storage-only network
HBA	Host Bus Adapter — PCIe card inside server that connects to SAN
FC	Fibre Channel — dedicated storage protocol/cable (up to 128 Gbps)
iSCSI	SCSI over TCP/IP Ethernet — cheaper SAN alternative
LBA	Logical Block Address — numbered storage locations on a drive
IOPS	Input/Output Operations Per Second — measures storage speed
Latency	Delay in microseconds from request to data delivery
Throughput	Amount of data transferred per second (GB/s or MB/s)
Petabyte (PB)	1,000 Terabytes = 1,000,000 Gigabytes
Exabyte (EB)	1,000 Petabytes = one billion Gigabytes
SDS	Software-Defined Storage — software manages hardware-agnostic storage pools
HCI	Hyper-Converged Infrastructure — compute + storage + network in one box

🎯 **Session Summary — Key Takeaways**

1. Storage hierarchy: Individual Drive → Tray → Rack → Row → Hall → Facility → Enterprise
2. Three architectures: DAS (direct cable), NAS (shared file over Ethernet), SAN (dedicated FC network)
3. Cables: SATA/SAS for DAS; Cat6 Ethernet for NAS; Fibre Channel or Twinax DAC for SAN
4. Protocols: NVMe fastest (PCIe); FC next (SAN); iSCSI (SAN over Ethernet); NFS/SMB (NAS files)
5. RAID protects data by combining drives — RAID 10 for performance, RAID 6 for large arrays
6. Cloud = outsourced storage in a CSP's data center; accessed over HTTPS REST API

7. Next-gen trends: All-Flash, NVMe-oF, HCI, SDS, HAMR, Object Storage

Prepared for Training Session | Source: Dgtl Infra Data Center Storage Guide