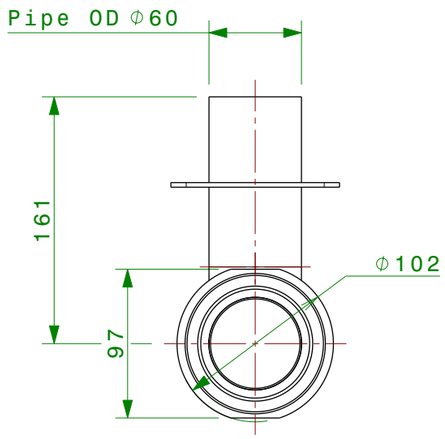

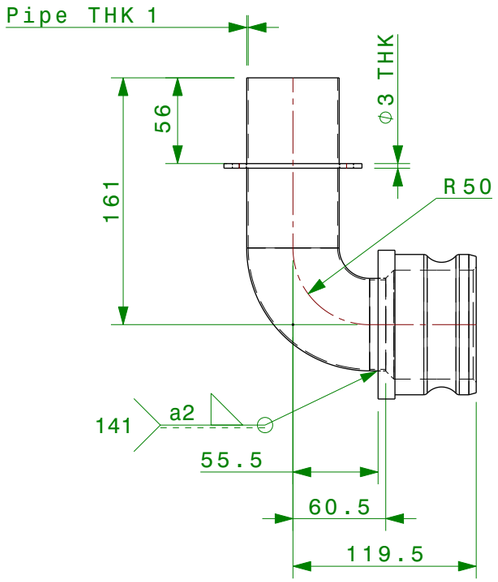

ISOMETRIC VIEW

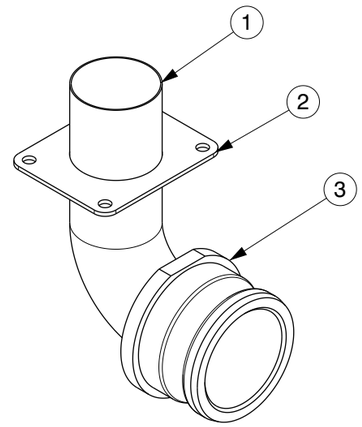

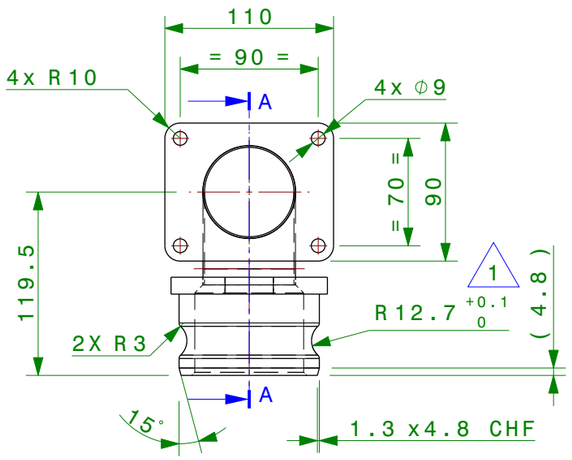

A-A
1:4

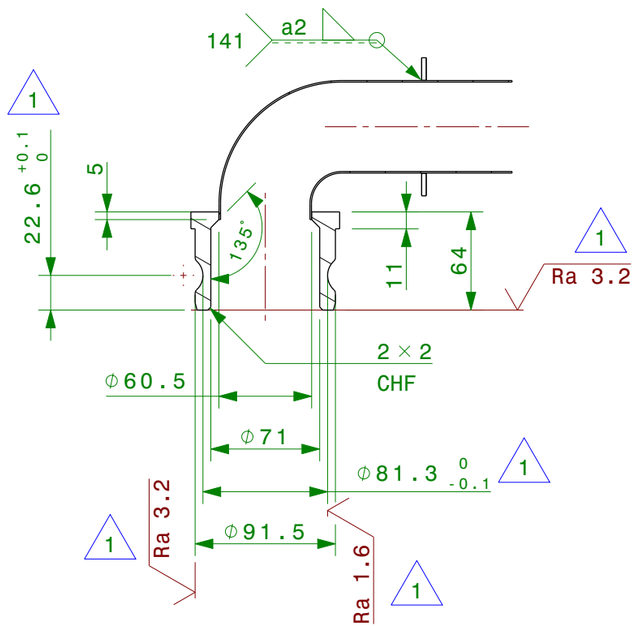

WELDING SPECIFICATION DIN - EN 15085 EDITION JAN-2008	
WELD DESIGN AS PER	EN 15085-3
INSPECTION TESTING AND DOCUMENTATION	EN 15085-5
WELD PERFORMANCE CLASS	CP C2
WELD INSPECTION CLASS	CT 3
WELD CERTIFICATION LEVEL OF MANUFACTURER	CL 2
WELD PROCEDURE	TIG 141
WELD FILLER MATERIAL	EN 15085-4
BASE MATERIAL	EN 10204-2004
WELDING TOLERANCE	ISO 13920-BF

NOTES :

1) Material : SS304 OR SS316
2) Sheet thickness : NA
3) Finish : Passivated
4) No burrs & sharp edges allowed
5) Boxed dimensions are critical / major dimensions.

ALL DIMENSIONS ARE IN MM UNLESS OTHERWISE SPECIFIED. DO NOT SCALE DRG. IF IN DOUBT ASK.

PART No.	REF DRG No	DESCRIPTION	MATERIAL	QTY	UNIT	MASS Kgs
3	--	CAMLOCK	SS304	1	NOS	1.342
2	--	BRACKET	SS304	1	NOS	0.158
1	--	PIPE	SS304	1	NOS	0.436

BILL OF MATERIAL

TOLERANCE ISO 2768

TOLERANCE CLASS: mK

THIS DRAWING CONTAINS CONFIDENTIAL INFORMATION OF BFG INTERNATIONAL LTD. THE COPYRIGHT, DESIGN RIGHT AND/OR OTHER INTELLECTUAL PROPERTY RIGHTS OF THIS DRAWING BELONGS TO THE COMPANY. THIS DRAWING MUST NOT BE REPRODUCED, DISCLOSED OR USED FOR THE PURPOSES OTHER THAN THOSE FOR WHICH PRIOR CONSENT OF THE COMPANY HAS BEEN GIVEN.

Rev No	Engg No	Rev by	DATE	REVISION
00	12741	VIRTUAL	11.02.21	FIRST ISSUE
01	13131	FAHED	17.7.22	TOLERANCES ADDED

REMARKS

BFG ITEM CODE FBM-WWT-115171

NEXT ASSY. W461A314

BFG INTERNATIONAL, BAHRAIN

CLIENT : SKODA

PROJECT 16Ev, LATVIA

TITLE 3 INCH CAMLOCK PIPE

DRAWING No. W461C132		REV.	01
		SCALE	1:4
SHEET	1 OF 1	DRAWN	Virtual
JOB No.	-	CHKD.	Virtual
DATE	11.02.21	APPD.	Sanjay

FO : BFG/DE/14 - Rev. 1

(A3=420x297)