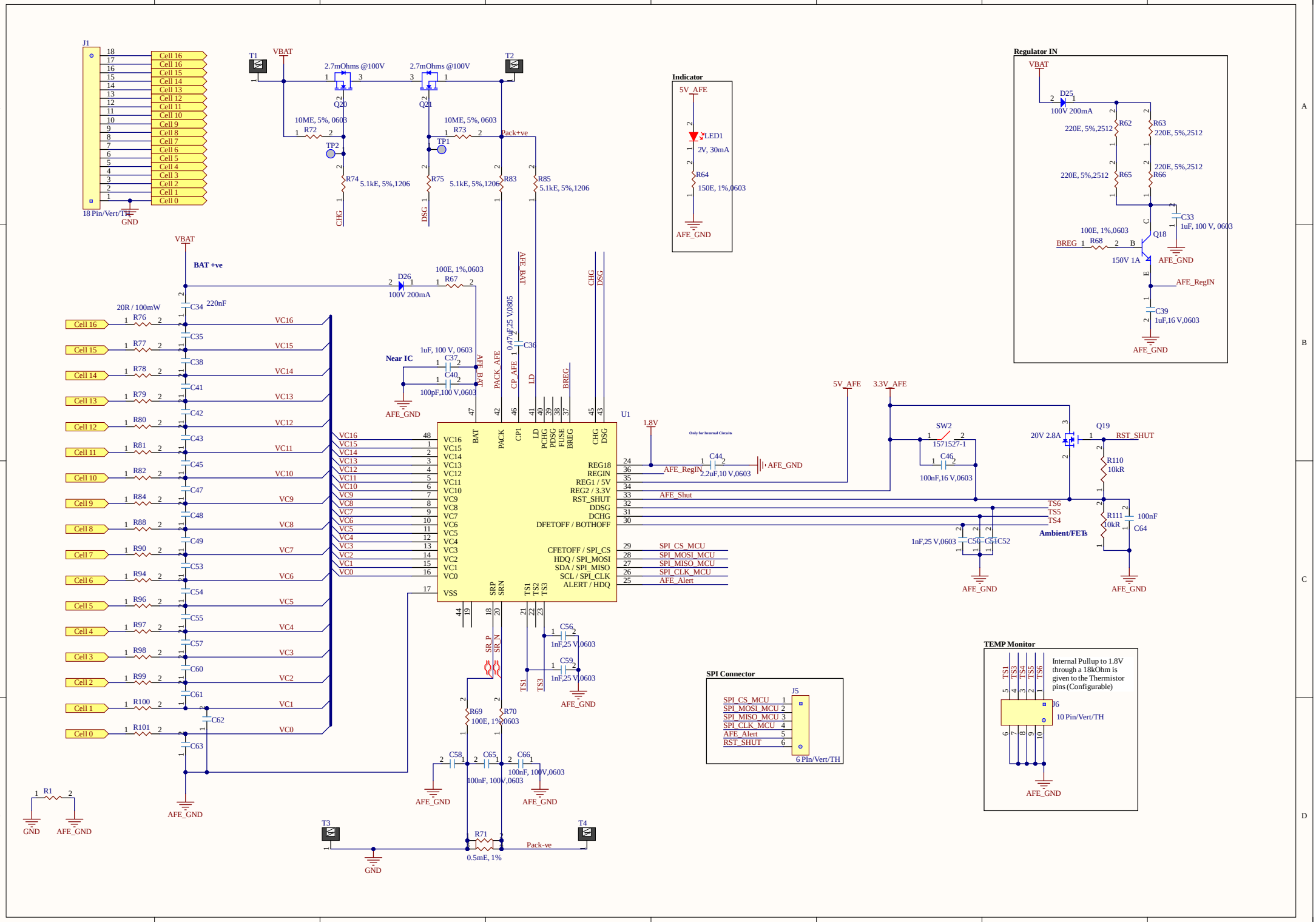
J1
18 Pin/Vert/TH
Cell 16
Cell 15
Cell 14
Cell 13
Cell 12
Cell 11
Cell 10
Cell 9
Cell 8
Cell 7
Cell 6
Cell 5
Cell 4
Cell 3
Cell 2
Cell 1
Cell 0
GND
T1
VBAT
T2
2.7mOhms @100V
Q20
Q21
10ME, 5%, 0603
R72
R73
TP2
TP1
Pack+ve
R74
R75
R83
R85
5.1kE, 5%,1206
CHG
DSG
Indicator
5V_AFE
LED1
2V, 30mA
R64
150E, 1%,0603
AFE_GND
Regulator IN
D25
100V 200mA
R62
R63
R65
R66
220E, 5%,2512
C33
1uF, 100 V, 0603
Q18
100E, 1%,0603
R68
BREG
150V 1A
AFE_RegIN
C39
1uF,16 V,0603
BAT +ve
D26
R67
C34
220nF
20R / 100mW
R76
R77
R78
R79
R80
R81
R82
R84
R88
R90
R94
R96
R97
R98
R99
R100
R101
C35
C38
C41
C42
C43
C45
C47
C48
C49
C53
C54
C55
C57
C60
C61
C62
C63
VC16
VC15
VC14
VC13
VC12
VC11
VC10
VC9
VC8
VC7
VC6
VC5
VC4
VC3
VC2
VC1
VC0
Near IC
C37
C40
1uF, 100 V, 0603
100pF,100 V,0603
AFE_BAT
PACK_AFE
CP_AFE
LD
BREG
0.47uF,25 V,0805
C36
U1
BAT
PACK
CP1
PCHG
PDSG
FUSE
REG18
REGIN
REG1 / 5V
REG2 / 3.3V
RST_SHUT
DDSG
DCHG
DFETOFF / BOTHOFF
CFETOFF / SPI_CS
HDQ / SPI_MOSI
SDA / SPI_MISO
SCL / SPI_CLK
ALERT / HDQ
VSS
SRP
SRN
TS1
TS2
TS3
1.8V
Only for Internal Circuits
C44
2.2uF,10 V,0603
AFE_Shut
SPI_CS_MCU
SPI_MOSI_MCU
SPI_MISO_MCU
SPI_CLK_MCU
AFE_Alert
5V_AFE
3.3V_AFE
SW2
1571527-1
C46
100nF,16 V,0603
Q19
20V 2.8A
RST_SHUT
R110
10kR
R111
10kR
100nF
C64
TS6
TS5
TS4
Ambient/FETs
C50
C51
C52
1nF,25 V,0603
C56
C59
1nF,25 V,0603
SR_P
SR_N
R69
R70
100E, 1%,0603
C58
C65
C66
100nF, 100V,0603
R1
T3
T4
R71
0.5mE, 1%
Pack-ve
SPI Connector
J5
SPI_CS_MCU 1
SPI_MOSI_MCU 2
SPI_MISO_MCU 3
SPI_CLK_MCU 4
AFE_Alert 5
RST_SHUT 6
6 PIn/Vert/TH
TEMP Monitor
Internal Pullup to 1.8V through a 18kOhm is given to the Thermistor pins (Configurable)
J6
10 Pin/Vert/TH

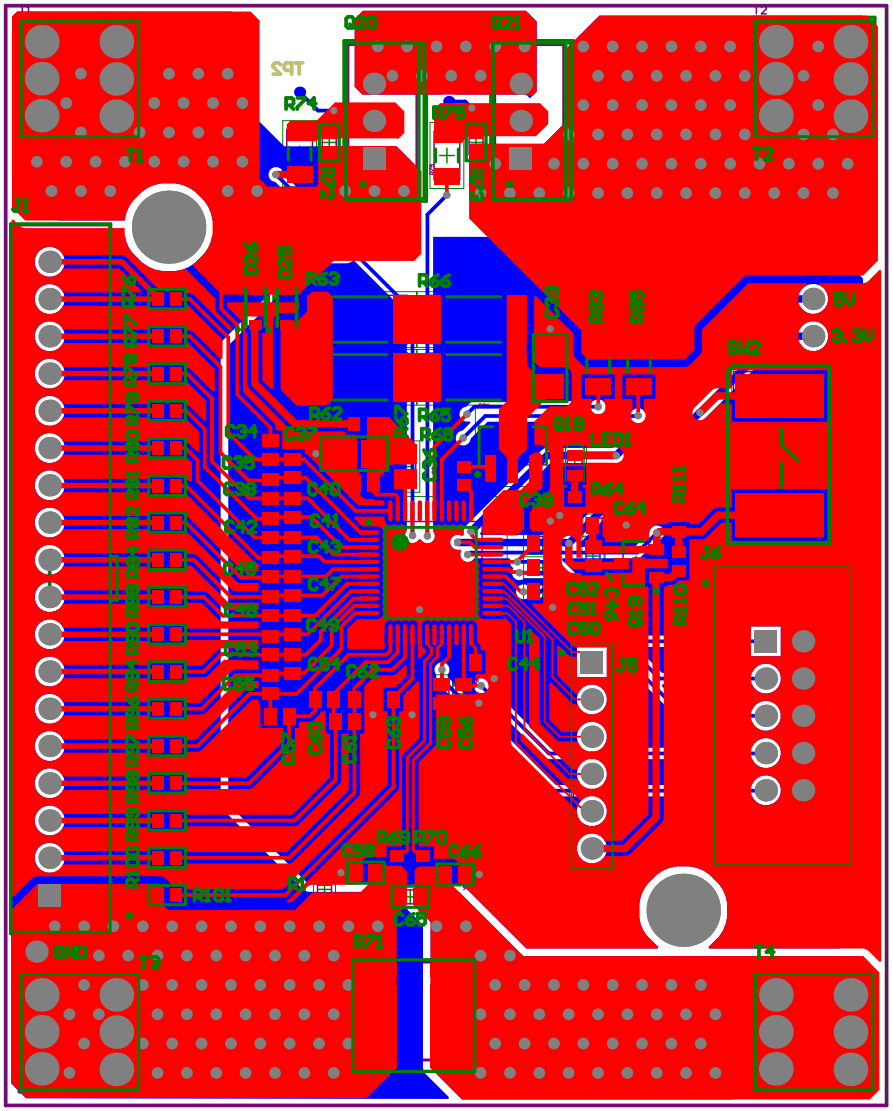

Layer	Name	Material	Thickness	Constant
	Top Overlay			
	Top Solder	Solder Resist	0.40mil	3.5
1	Top Layer		1.40mil	
	Dielectric 1	FR-4	59.06mil	4.8
2	Bottom Layer		1.40mil	
	Bottom Solder	Solder Resist	0.40mil	3.5
	Bottom Overlay			

Mechanical Layer
Mechanical Layer
Mechanical Layer
1. Top Layer
2. Bottom Layer
Bottom Overlay
Top Overlay