Design of Energy Efficient Ternary Logic Circuit Using GNRFETs

Kundrapu Navneeth
Department of ECE
IIIT Naya Raipur
Chhattisgarh,India
kundrapu23101@iiitnr.edu.in

Pithani Balasai Narasimha
Department of ECE
IIIT Naya Raipur
Chhattisgarh,India
pithani23101@iiitnr.edu.in

***Abstract*—With the continuous scaling of VLSI systems, conventional binary logic suffers from increased transistor count, interconnect complexity, routing congestion, and propagation delay. Multi-valued logic, particularly ternary logic, provides an attractive alternative due to its capability of storing more information per logic digit and reducing arithmetic complexity. However, implementation of ternary logic requires stable multi-threshold devices which are difficult to realize efficiently using conventional CMOS technology.**

In this work, a complete HSPICE based design and performance validation of multi-threshold ternary logic circuits using Graphene Nanoribbon Field Effect Transistors (GNRFETs) is presented. By exploiting the dependence of threshold voltage on graphene nanoribbon width through dimer line variation, three distinct threshold devices are engineered and utilized to construct Standard Ternary Inverter (STI), Positive Ternary Inverter (PTI), Negative Ternary Inverter (NTI), universal NAND/NOR gates, ternary decoder, and ternary half adder. The proposed circuits are functionally verified through transient simulations and analytically compared with existing CNTFET based ternary implementations.

Simulation results demonstrate an average propagation delay reduction of 41.3% and circuit area reduction of nearly 64% compared to CNTFET reference designs, with only marginal increase in power dissipation. The obtained results validate GNRFET as a highly promising nanoelectronic device for future compact and high-speed multi-valued VLSI systems.

***Index Terms*—Ternary Logic, GNRFET, HSPICE, Multi-Valued Logic, Nanoelectronics, Propagation Delay, Half Adder**

I. Introduction

The rapid advancement of nanoscale digital electronics has significantly increased the complexity of modern integrated circuits. Conventional digital systems are primarily built using binary logic, where each signal assumes one of two possible states represented by logic '0' and logic '1'. Although binary logic has dominated digital computation for decades, the continuous increase in computational density has introduced severe implementation challenges such as larger transistor count, higher interconnect density, greater propagation delay, increased switching power, and substantial routing overhead.

To overcome these limitations, researchers have focused on Multi-Valued Logic (MVL) systems where more than two logic levels are utilized for data representation. Among the available MVL families, ternary logic has attracted significant attention because of its practical noise margins and reduced circuit complexity. In ternary logic, three discrete logic states are used, namely logic 0, logic 1, and logic 2 corresponding to voltage levels 0 V, $V_{DD}/2$, and V_{DD} respectively. Since each ternary digit stores $\log_2(3) \approx 1.585$ bits of information, a large binary word can be represented using fewer ternary digits. For example, a 32-bit binary number requires only approximately 21 ternary digits, thereby reducing the arithmetic hardware requirement and interconnection burden.

Despite these advantages, practical implementation of ternary logic strongly depends on the availability of stable multi-threshold switching devices. Conventional CMOS transistors inherently support binary switching and require complicated body-bias techniques to emulate multiple thresholds, which significantly increases fabrication complexity and leakage effects in nanometer regimes. Consequently, emerging nanoelectronic transistors such as Carbon Nanotube Field Effect Transistors (CNTFETs) and Graphene Nanoribbon Field Effect Transistors (GNRFETs) have been investigated for efficient ternary logic realization.

Among these, GNRFETs provide superior physical and electrical properties due to their planar graphene structure, high carrier mobility, ballistic transport behavior, excellent thermal conductivity, high tensile strength, and tunable threshold voltage characteristics. Unlike CNTFETs where threshold tuning depends on nanotube diameter and chirality uncertainties, GNRFETs offer more reliable threshold engineering by simply varying the graphene nanoribbon width through dimer line control. This property makes GNRFET highly suitable for designing robust multi-threshold ternary circuits.

Recently, Madhuri and Sunithamani [1] proposed a comprehensive framework for designing ternary logic gates and arithmetic circuits using GNRFET technology, demonstrating significant improvements in propagation delay and circuit area compared to CNTFET-based designs.

This work is based on their methodology. The circuit architectures, theoretical formulations, and threshold engineering concepts adopted in this paper are derived from their work. In contrast to the original study, the present work focuses on independent HSPICE-based implementation, simulation, and validation of these ternary logic circuits. The objective is to verify the reproducibility and practical feasibility of GNRFET-based ternary designs under circuit-level simulation

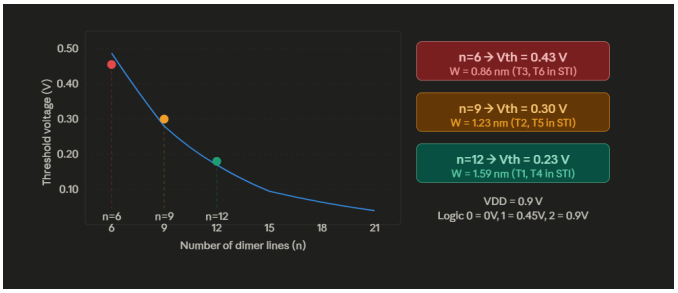

Fig. 1: Reason for GNRFET for Multithreshold circuit

conditions. Additionally, the obtained results are compared with reported literature values and CNTFET references for performance evaluation. The major contributions of this paper are summarized as follows:

- Multi-threshold GNRFET devices are analytically engineered by varying graphene dimer line width.
- Fundamental ternary inverters STI, PTI, and NTI are designed and validated in HSPICE.
- Universal ternary NAND and NOR gates along with ternary decoder and half adder are implemented.
- Delay, power, and area metrics are extracted and compared with reported CNTFET ternary designs.
- Independent simulation validates the suitability of GNRFET technology for future high-speed MVL systems.

The remainder of the paper is organized as follows. Section II presents the related literature survey. Section III discusses the GNRFET device modeling and threshold voltage engineering. Section IV explains the proposed ternary logic circuit implementations. Section V presents simulation setup, obtained results, and comparative analysis. Finally, Section VI concludes the paper.

II. Related Work

Multi-valued logic has been investigated extensively as a possible successor to conventional binary systems because of its ability to reduce interconnect overhead and improve arithmetic efficiency. Early ternary logic implementations were attempted using CMOS body-bias structures; however, these designs suffered from poor scalability, unstable midpoint voltage generation, and increased static leakage.

CNTFET based ternary logic circuits later emerged as a practical alternative because the threshold voltage of CNTFET can be controlled through nanotube diameter selection. Several ternary logic families including inverters, arithmetic circuits, and memory cells have been reported using CNTFET technology. Although CNTFET based implementations provide lower power compared to resistive CMOS ternary structures, fabrication non-uniformity caused by chirality and tube alignment remains a serious concern.

To address these limitations, graphene nanoribbon transistors have been proposed as a superior nanoelectronic device for MVL realization. GNRFETs exhibit high conductivity, large mean free path, superior electrostatic control, and reliable planar fabrication compatibility. Most importantly, the threshold voltage of GNRFET can be controlled through nanoribbon width, thereby naturally enabling multi-threshold circuit realization.

Madhuri and Sunithamani presented one of the most comprehensive studies on GNRFET based ternary logic circuits, where Standard Ternary Inverter, Positive Ternary Inverter, Negative Ternary Inverter, universal NAND/NOR gates, half adder, and full adder were designed using width controlled threshold engineering. Their study reported approximately 41.3% reduction in propagation delay and 64% reduction in circuit area over equivalent CNTFET ternary circuits. The present work adopts their theoretical threshold framework and performs independent HSPICE based circuit validation for practical verification of the same.

III. GNRFET Device Modeling and Multi-Threshold Engineering

Graphene Nanoribbon Field Effect Transistor (GNRFET) is a graphene based nanoelectronic transistor in which a narrow strip of graphene nanoribbon forms the channel region between heavily doped source and drain terminals. Due to the two-dimensional honeycomb arrangement of carbon atoms and strong sp^2 bonding, GNRFETs exhibit excellent carrier transport characteristics, high thermal conductivity, and enhanced mechanical robustness.

The most significant property of GNRFET for ternary logic realization is its tunable threshold voltage. Unlike conventional MOSFETs where threshold engineering requires body biasing, the threshold voltage in GNRFET can be directly controlled by changing the width of the graphene nanoribbon channel. The threshold voltage is related to the bandgap energy as

$$V_{th} = \frac{E_g}{3e} \tag{1}$$

where E_g is the bandgap energy and e is the electron charge.

The bandgap energy of graphene nanoribbon is expressed as

$$E_g = 2|\alpha|\Delta E \tag{2}$$

where

$$\Delta E = \frac{\hbar v_f \pi}{W} \tag{3}$$

Here, $\hbar$ denotes Planck's constant, v_f is the Fermi velocity, and W is the width of the graphene nanoribbon.

The width W is determined by the number of dimer lines n as

$$W = (n+1)\frac{\sqrt{3}}{2}a \tag{4}$$

where a represents the carbon-carbon bond distance.

From equations (1) to (4), it is evident that the threshold voltage is inversely proportional to the graphene nanoribbon width. Therefore, by increasing the number of dimer lines, the width increases, the bandgap decreases, and consequently the threshold voltage decreases. This principle forms the basis of

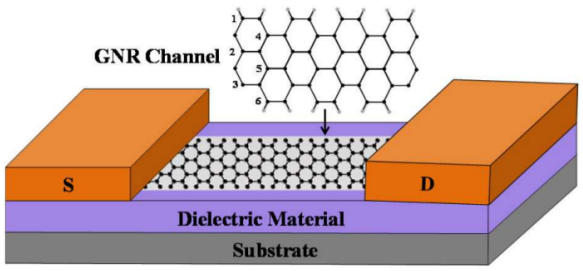

Fig. 2: GNRFET Structure

multi-threshold ternary logic implementation. For the present work, three different GNR widths are selected to realize three threshold devices required for stable ternary switching. The adopted values are shown in Table I.

TABLE I: Dimer Line Controlled Threshold Voltages

Dimer Lines (n)	Width (nm)	Threshold Voltage (V)
6	0.86	0.43
9	1.23	0.30
12	1.59	0.23

These three threshold levels are employed repeatedly in the proposed ternary logic family to generate stable low, middle, and high state transitions.

IV. Proposed Ternary Logic Circuit Design

Using the analytically engineered multi-threshold GNRFET devices, a complete ternary logic family is implemented consisting of ternary inverters, universal logic gates, ternary decoder, and ternary half adder. The logic states are defined as follows:

- Logic 0 $\rightarrow$ 0 V
- Logic 1 $\rightarrow$ $V_{DD}/2 = 0.45$ V
- Logic 2 $\rightarrow$ $V_{DD} = 0.9$ V

A. Standard Ternary Inverter (STI)

The Standard Ternary Inverter performs complete ternary inversion according to

$$\bar{a} = 2 - a \tag{5}$$

Thus, the STI output behavior is:

- Input = 0 $\rightarrow$ Output = 2
- Input = 1 $\rightarrow$ Output = 1
- Input = 2 $\rightarrow$ Output = 0

The proposed STI is realized using six GNRFETs with three distinct threshold voltages. The upper pull-up network uses p-channel GNRFETs while the lower pull-down network uses n-channel GNRFETs. Two diode-connected transistors are inserted at the center branch to generate the stable midpoint voltage corresponding to logic 1.

When the applied input voltage is below the lowest threshold, the pull-up path dominates and charges the output to V_{DD}. At intermediate input voltage, both diode-connected transistors create a controlled voltage drop and establish the output at approximately $V_{DD}/2$. When the input exceeds the higher threshold, the pull-down network becomes dominant and discharges the output to ground. Thus a complete three-level inversion characteristic is obtained.

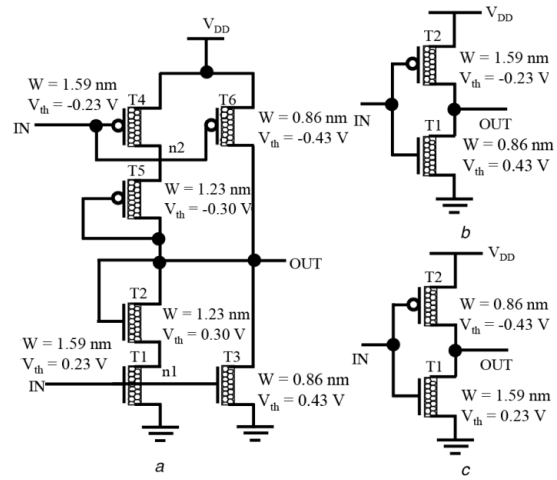

Fig. 3: Multi-threshold GNRFET based ternary inverter family: (a) STI, (b) PTI, (c) NTI.

B. Positive Ternary Inverter (PTI)

The Positive Ternary Inverter produces high output for the lower two ternary states and low output only for the highest input state. Its logic behavior is given by:

- Input = 0 $\rightarrow$ Output = 2
- Input = 1 $\rightarrow$ Output = 2
- Input = 2 $\rightarrow$ Output = 0

PTI is implemented using two GNRFET devices with suitable threshold selection. It behaves as a lower threshold detector and is primarily utilized in ternary decoder implementation.

C. Negative Ternary Inverter (NTI)

The Negative Ternary Inverter generates high output only when the input is at the lowest logic level. Its truth behavior is:

- Input = 0 $\rightarrow$ Output = 2
- Input = 1 $\rightarrow$ Output = 0
- Input = 2 $\rightarrow$ Output = 0

Similar to PTI, NTI is also realized using two GNRFETs and functions as a zero-level detector in arithmetic and decoding circuits.

D. Ternary Universal NAND and NOR Gates

Using the multi-threshold inverter concept, universal two-input ternary NAND and ternary NOR gates are developed. Both circuits employ ten GNRFET transistors using the three width categories listed in Table I.

The ternary NAND gate performs

$$Y_{NAND} = STI(\min(A, B)) \tag{6}$$

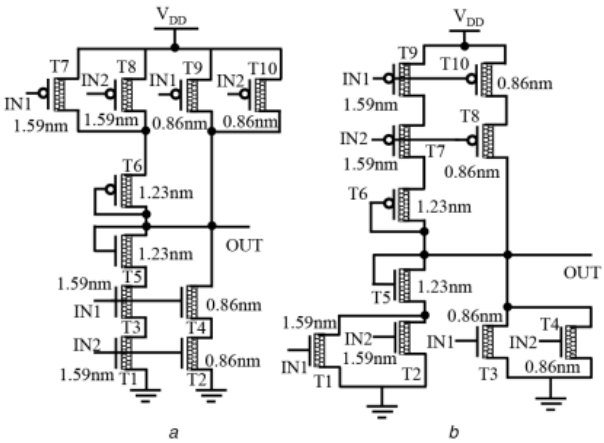

Fig. 4: (a) TNAND (b) TNOR

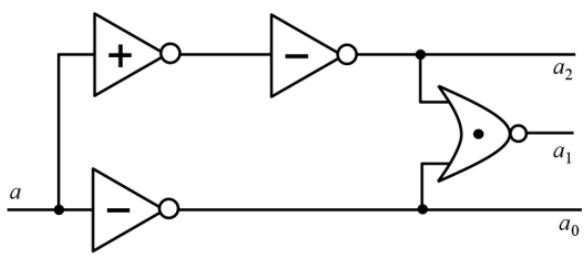

Fig. 5: Decoder

while the ternary NOR gate performs

$$Y_{NOR} = STI(\max(A, B)) \tag{7}$$

In ternary NAND, the n-channel pull-down path is arranged in series while the p-channel pull-up path is arranged in parallel. This ensures discharge only when both inputs are sufficiently high. Conversely, the ternary NOR gate forms the exact dual topology in which the pull-down network is parallel and the pull-up network is series.

In both gates, diode-connected midpoint transistors are used to stabilize the intermediate logic level and guarantee proper three-state output generation.

E. Ternary Decoder

The ternary decoder converts a single ternary input into three unary outputs corresponding to each logic state. The decoder output is mathematically represented as

$$a_x = \begin{cases} 2, & \text{if } a = x \\ 0, & \text{if } a \neq x \end{cases} \tag{8}$$

where $x = 0, 1, 2$.

Thus, for one ternary input a, three output lines a_0, a_1, and a_2 are generated such that only one output remains active at a time. The decoder is constructed using one PTI, one ternary NOR gate, and two NTI blocks.

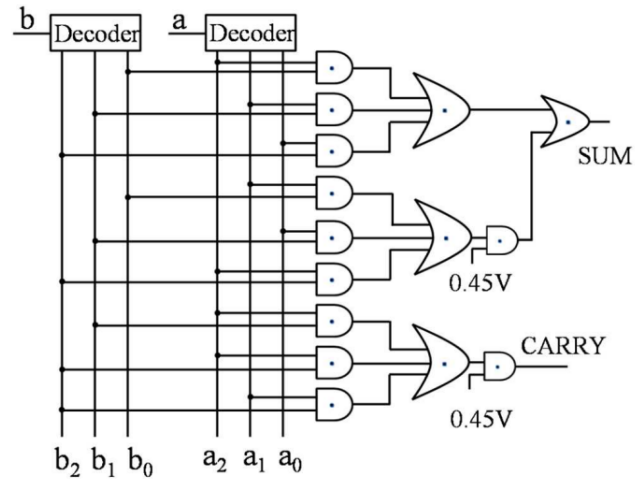

Fig. 6: HALF ADDER

F. Ternary Half Adder

The ternary half adder is one of the most important arithmetic blocks in multi-valued logic systems. It accepts two ternary inputs a and b and produces Sum and Carry outputs.

The Sum function is given by

$$Sum = a_2b_0 + a_1b_1 + a_0b_2 + 1(a_1b_0 + a_0b_1 + a_2b_2) \tag{9}$$

and the Carry function is given by

$$Carry = 1(a_2b_1 + a_2b_2 + a_1b_2) \tag{10}$$

The implementation uses two ternary decoder blocks to generate unary signals for both inputs, followed by ternary AND and OR combinations to realize the above equations. Because ternary addition involves nine possible input combinations, the proposed decoder based realization provides a systematic and scalable arithmetic design methodology.

The complete proposed ternary logic family therefore forms a hierarchical implementation beginning from threshold engineered GNRFET devices up to arithmetic circuit level verification.

V. HSPICE Simulation Setup and Performance Analysis

To validate the practical feasibility of the proposed ternary circuits, all designs were independently implemented and simulated using HSPICE under transient operating conditions. A compact GNRFET SPICE model was employed in which the practical non-idealities such as quantum confinement effects, Schottky barrier influence, gate capacitance, finite scattering effects, and source/drain parasitics are inherently considered.

The supply voltage was fixed at

$$V_{DD} = 0.9V \tag{11}$$

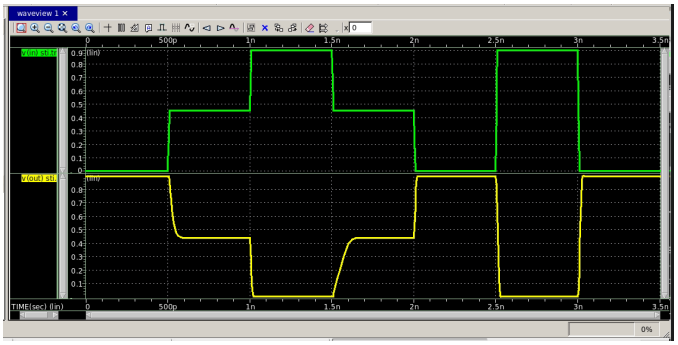

Fig. 7: STI Simulation

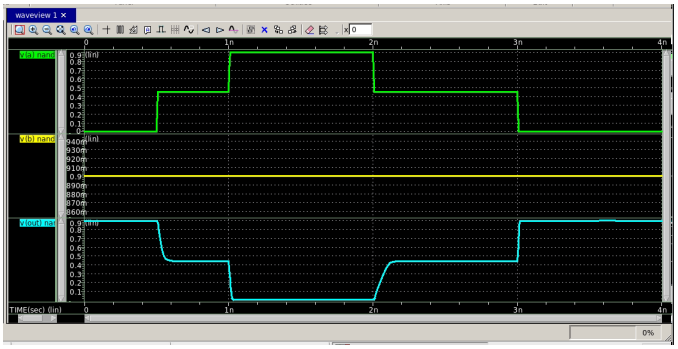

Fig. 8: TNAND Simulation

thereby defining the ternary logic levels as 0 V, 0.45 V, and 0.9 V. Piecewise pulse inputs were applied to each circuit in order to verify all possible ternary transitions. Propagation delay was measured at the 50% voltage transition points between input and output waveforms, while average power dissipation was calculated from the transient switching response.

A. Functional Verification and Simulation results

Transient simulation confirms that all proposed circuits exhibit correct ternary logic behavior.

- STI successfully generates the full inversion sequence 2,1,0 for inputs 0,1,2.
- PTI produces high output for lower two states and low output for highest state.
- NTI detects the zero level and produces corresponding unary logic.
- Ternary NAND and NOR produce correct universal gate truth responses.
- Ternary decoder successfully activates only one unary output at a time.
- Ternary half adder generates correct Sum and Carry for all nine input combinations.

The obtained transient waveforms closely match the expected truth tables and independently validate the GNRFET threshold engineering methodology.

B. Propagation Delay and Power Evaluation

The simulated propagation delay and power values were extracted and compared with the originally reported literature

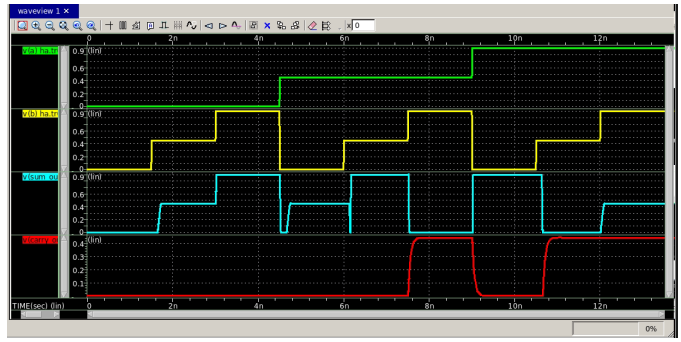

Fig. 9: Half Adder Simulation

values as well as CNTFET reference designs. The comparative results are summarized in Table

II.

It can be observed that the independently obtained HSPICE values are in very close agreement with the previously reported GNRFET literature values, thereby confirming the correctness of the present implementation.

C. Area Comparison

One of the major advantages of ternary GNRFET realization is the substantial reduction in physical area requirement. Since ternary arithmetic requires fewer logic digits than binary arithmetic, the gate count and interconnect routing are inherently reduced. Additionally, the planar structure of graphene nanoribbon devices permits compact transistor arrangement.

The area comparison with CNTFET implementations is shown in Table III.

The area values indicate nearly 64% reduction in physical footprint over equivalent CNTFET ternary realizations.

D. Discussion

The overall performance analysis reveals three important observations:

1) **Lower Propagation Delay:** Due to higher carrier mobility and larger current driving capability of graphene nanoribbon channels, the proposed GNRFET circuits charge and discharge output nodes faster than CNTFET counterparts. The average delay improvement is approximately 41.3%.
2) **Compact Device Realization:** Because threshold tuning is achieved through simple width variation and because ternary systems require fewer arithmetic digits, the overall transistor arrangement becomes highly compact, producing nearly 64% reduction in circuit area.
3) **Marginal Power Tradeoff:** The GNRFET circuits show a slight average increase of approximately 7.8% in power dissipation. This increase is primarily due to the larger ON current and stronger conduction capability of graphene channels. However, considering the substantial speed and area gains, this power overhead remains acceptable.

TABLE II: Comparative Performance Analysis of Proposed GNRFET Ternary Circuits

Circuit	GNRFET Delay (ps)	Sim. Delay (ps)	GNRFET Power (μW)	Sim. Power (μW)	CNTFET Delay (ps)	CNTFET Power (μW)
STI	15.88	16.09	6.163	5.961	27.10	5.700
PTI	7.96	8.28	2.873	2.736	13.60	2.657
NTI	15.90	16.29	3.261	3.149	27.18	3.018
TNAND	19.94	20.29	6.643	6.504	34.10	6.144
TNOR	20.17	20.64	6.701	6.556	34.50	6.201

TABLE III: Area Comparison of GNRFET and CNTFET Circuits

Circuit	GNRFET Area (m^2)	CNTFET Area (m^2)
STI	2.35×10^{-16}	6.85×10^{-16}
PTI	7.84×10^{-17}	21.79×10^{-17}
NTI	7.84×10^{-17}	21.79×10^{-17}
Half Adder	2.92×10^{-15}	7.81×10^{-15}

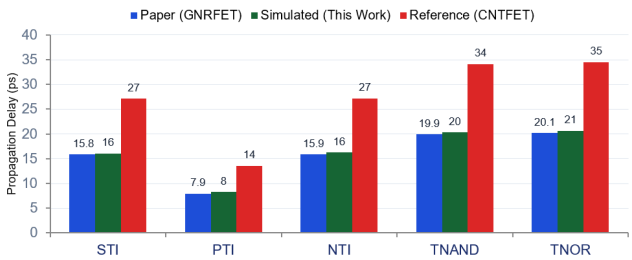

Fig. 10: Comparsion graph for Our work and the paper work

Thus, the obtained results establish that GNRFET based ternary circuits provide a highly balanced tradeoff among speed, compactness, and practical fabrication suitability.

VI. Conclusion

In this paper, a complete HSPICE based design and validation of multi-threshold ternary logic circuits using Graphene Nanoribbon Field Effect Transistors has been presented. By exploiting the inverse relation between graphene nanoribbon width and threshold voltage, three stable threshold devices were analytically engineered and utilized to construct Standard Ternary Inverter, Positive Ternary Inverter, Negative Ternary Inverter, universal NAND/NOR gates, ternary decoder, and ternary half adder.

Independent transient simulations confirmed correct ternary functionality for all implemented circuits. The obtained performance values closely matched previously reported literature results, thereby validating the adopted GNRFET methodology. Comparative study with CNTFET based ternary circuits demonstrated an average propagation delay reduction of 41.3%, approximately 64% reduction in circuit area, and only marginal increase in power dissipation. The presented investigation confirms that GNRFET technology is a highly promising candidate for future energy efficient, compact, and high-speed multi-valued nanoelectronic VLSI systems. Furthermore, the proposed threshold engineering framework can be extended toward implementation of larger arithmetic blocks such as ternary full adders, multipliers, and memory architectures.

References

[1] B. D. Madhuri and S. Sunithamani, "Design of ternary logic gates and circuits using GNRFETs," *IET Circuits, Devices & Systems*, vol. 14, no. 7, pp. 972–979, 2020.

[2] R. Chen, Y. Yoon, and M. S. Lundstrom, "A SPICE-compatible model for graphene nanoribbon field-effect transistors," *IEEE Transactions on Electron Devices*, vol. 62, no. 3, pp. 756–763, Mar. 2015.

[3] S. Lin and H. Kim, "Multi-valued logic design using carbon nanotube field effect transistors," *IEEE Transactions on Nanotechnology*, vol. 17, no. 4, pp. 601–609, Jul. 2018.

[4] A. Naeemi and J. D. Meindl, "Carbon-based interconnects and nanoelectronics for future VLSI systems," *IEEE Electron Device Letters*, vol. 28, no. 5, pp. 428–431, May 2007.

[5] K. Wakabayashi, K. Sasaki, T. Nakanishi, and T. Enoki, "Electronic states of graphene nanoribbons and analytical solutions," *Science and Technology of Advanced Materials*, vol. 11, no. 5, pp. 054504, 2010.

[6] M. Y. Han, B. Özyilmaz, Y. Zhang, and P. Kim, "Energy band-gap engineering of graphene nanoribbons," *Physical Review Letters*, vol. 98, no. 20, pp. 206805, 2007.

[7] X. Li, X. Wang, L. Zhang, S. Lee, and H. Dai, "Chemically derived ultrasmooth graphene nanoribbon semiconductors," *Science*, vol. 319, no. 5867, pp. 1229–1232, 2008.

[8] R. Kim and M. S. Lundstrom, "Computational study of performance limits of graphene nanoribbon transistors," *IEEE Transactions on Electron Devices*, vol. 56, no. 1, pp. 132–139, Jan. 2009.

[9] M. A. Tehrani and K. Navi, "A novel ternary half adder using CNTFET technology," *Microelectronics Journal*, vol. 55, pp. 91–99, 2016.

[10] S. L. Hurst, "Multiple-valued logic — its status and its future," *IEEE Transactions on Computers*, vol. C-33, no. 12, pp. 1160–1179, Dec. 1984.