# ER (Entity Relationship) Diagram in DBMS

- ER model stands for an Entity-Relationship model. It is a high-level data model. This model is used to define the data elements and relationship for a specified system.
- It develops a conceptual design for the database. It also develops a very simple and easy to design view of data.
- In ER modeling, the database structure is portrayed as a diagram called an entity-relationship diagram.

**For example,** Suppose we design a school database. In this database, the student will be an entity with attributes like address, name, id, age, etc. The address can be another entity with attributes like city, street name, pin code, etc and there will be a relationship between them.

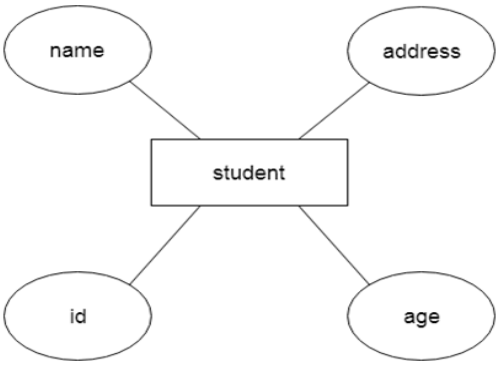


## Component of ER Diagram

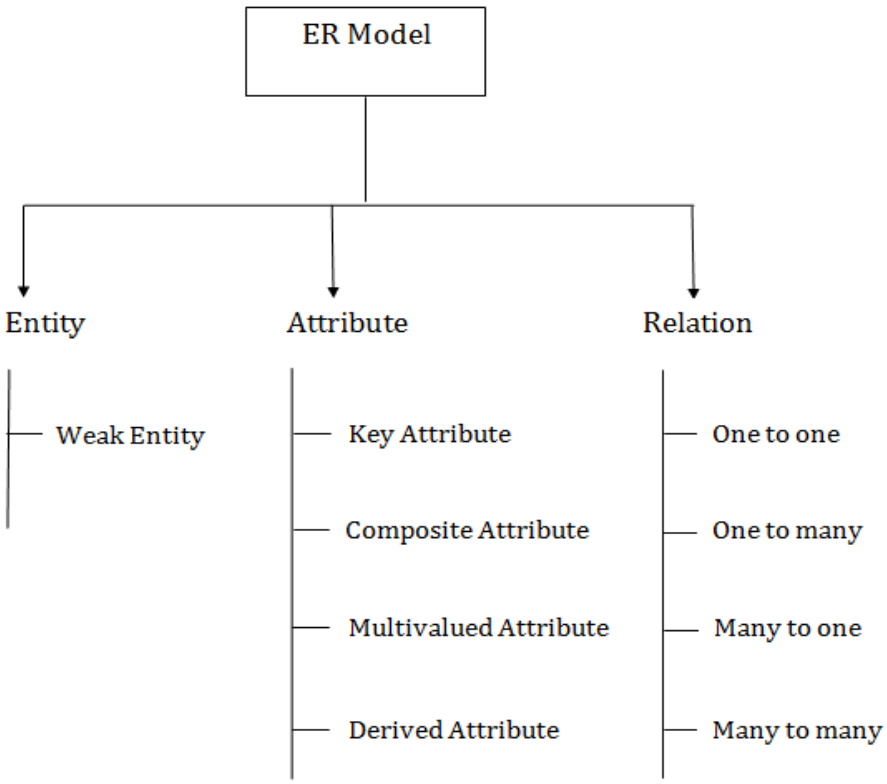

## 1. Entity:

An entity may be any object, class, person or place. In the ER diagram, an entity can be represented as rectangles.

Consider an organization as an example- manager, product, employee, department etc. can be taken as an entity.

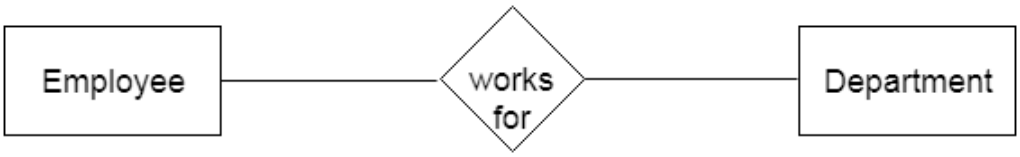


**a. Weak Entity**

An entity that depends on another entity called a weak entity. The weak entity doesn't contain any key attribute of its own. The weak entity is represented by a double rectangle.

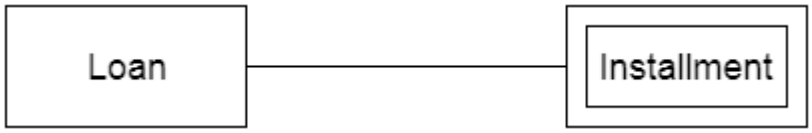


## 2. Attribute

The attribute is used to describe the property of an entity. Eclipse is used to represent an attribute.

**For example,** id, age, contact number, name, etc. can be attributes of a student.

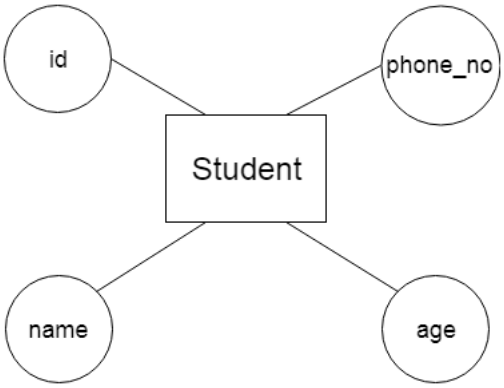

**a. Key Attribute**

The key attribute is used to represent the main characteristics of an entity. It represents a primary key. The key attribute is represented by an ellipse with the text underlined.

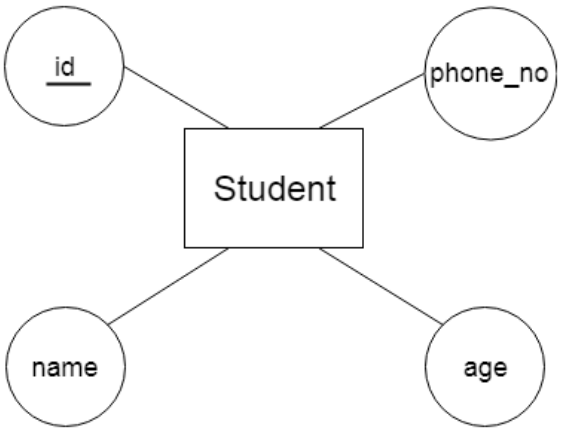


**b. Composite Attribute**

An attribute that composed of many other attributes is known as a composite attribute. The composite attribute is represented by an ellipse, and those ellipses are connected with an ellipse.

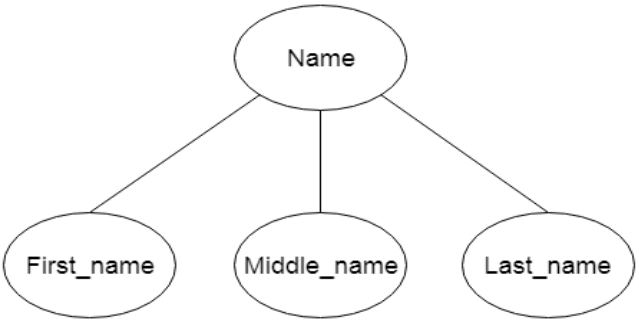


**c. Multivalued Attribute**

An attribute can have more than one value. These attributes are known as a multivalued attribute. The double oval is used to represent multivalued attribute.

**For example,** a student can have more than one phone number.

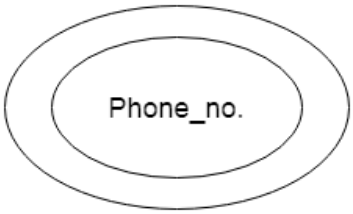


**d. Derived Attribute**

An attribute that can be derived from other attribute is known as a derived attribute. It can be represented by a dashed ellipse.

**For example,** A person's age changes over time and can be derived from another attribute like Date of birth.

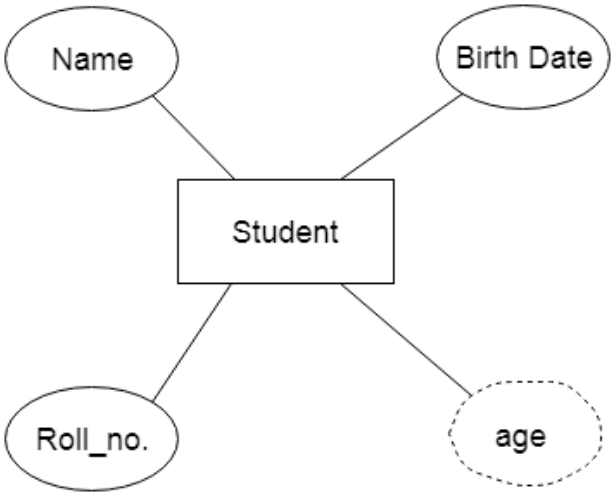


## 3. Relationship

A relationship is used to describe the relation between entities. Diamond or rhombus is used to represent the relationship.

Types of relationship are as follows:

**a. One-to-One Relationship**

When only one instance of an entity is associated with the relationship, then it is known as one to one relationship.

**For example,** A female can marry to one male, and a male can marry to one female.

**b. One-to-many relationship**

When only one instance of the entity on the left, and more than one instance of an entity on the right associates with the relationship then this is known as a one-to-many relationship.

**For example,** Scientist can invent many inventions, but the invention is done by the only specific scientist.

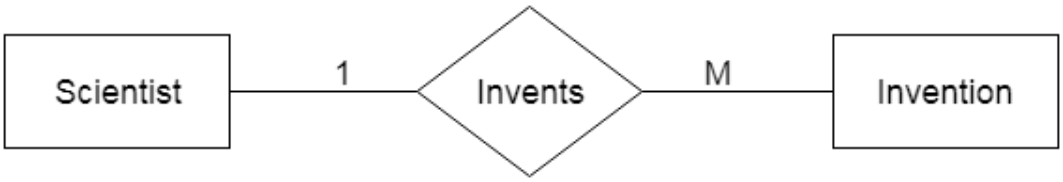


**c. Many-to-one relationship**

When more than one instance of the entity on the left, and only one instance of an entity on the right associates with the relationship then it is known as a many-to-one relationship.

**For example,** Student enrolls for only one course, but a course can have many students.

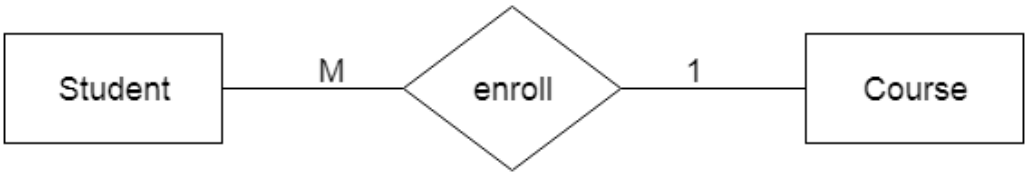


**d. Many-to-many relationship**

When more than one instance of the entity on the left, and more than one instance of an entity on the right associates with the relationship then it is known as a many-to-many relationship.

**For example,** Employee can assign by many projects and project can have many employees.

# Cardinality in DBMS (Mapping Constraints)

## DBMS

DBMS stands for Database Management System, which is a tool, or a software used to do various operations on a Database like the Creation of the Database, Deletion of the Database, or Updating the current Database. To simplify processing and data querying, the most popular types of Databases currently in use typically model their data as rows and columns in a set of tables. The data may then be handled, updated, regulated, and structured with ease. For writing and querying data, most Databases employ Structured Query Language (SQL).

## Cardinality

Cardinality means how the entities are arranged to each other or what is the relationship structure between entities in a relationship set. In a Database Management System, Cardinality represents a number that denotes how many times an entity is participating with another entity in a relationship set. The Cardinality of DBMS is a very important attribute in representing the structure of a Database. In a table, the number of rows or tuples represents the Cardinality.

## Cardinality Ratio

Cardinality ratio is also called **Cardinality Mapping**, which represents the mapping of one entity set to another entity set in a relationship set. We generally take the example of a binary relationship set where two entities are mapped to each other.

Cardinality is very important in the Database of various businesses. For example, if we want to track the purchase history of each customer then we can use the one-to-many cardinality to find the data of a specific customer. The Cardinality model can be used in Databases by Database Managers for a variety of purposes, but corporations often use it to evaluate customer or inventory data.

***There are four types of Cardinality Mapping in Database Management Systems:***

1. **One to one**
2. **Many to one**
3. **One to many**
4. **Many to many**

## One to One

One to one cardinality is represented by a **1:1** symbol. In this, there is at most one relationship from one entity to another entity. There are a lot of examples of one-to-one cardinality in real life databases.

**For example,** one student can have only one student id, and one student id can belong to only one student. So, the relationship mapping between student and student id will be one to one cardinality mapping.

Another example is the relationship between the director of the school and the school because one school can have a maximum of one director, and one director can belong to only one school.

***Note: it is not necessary that there would be a mapping for all entities in an entity set in one-to-one cardinality. Some entities cannot participate in the mapping.***

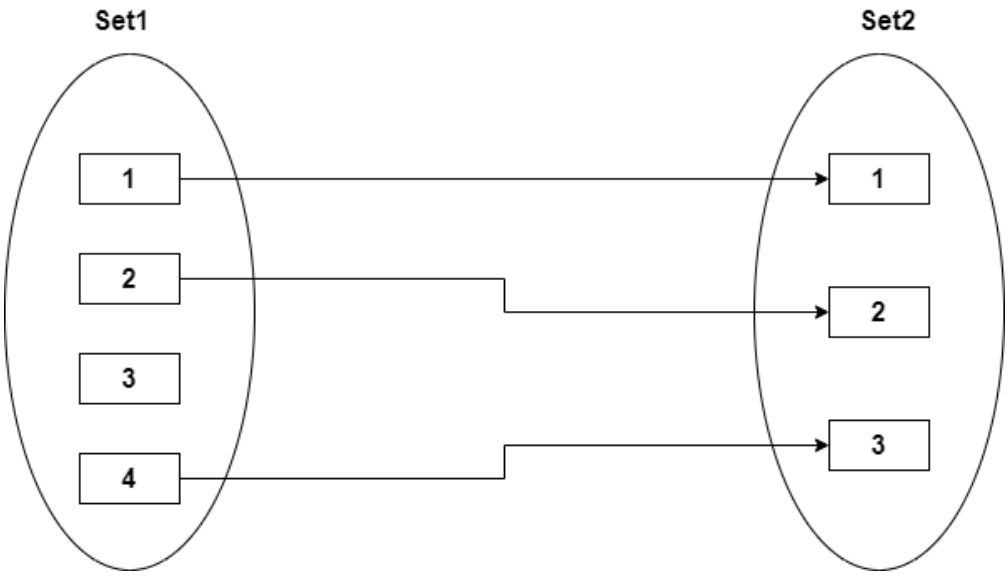


## Many to One Cardinality:

In many to one cardinality mapping, from set 1, there can be multiple sets that can make relationships with a single entity of set 2. Or we can also describe it as from set 2, and one entity can make a relationship with more than one entity of set 1.

One to one Cardinality is the subset of Many to one Cardinality. It can be represented by **M:1**.

**For example**, there are multiple patients in a hospital who are served by a single doctor, so the relationship between patients and doctors can be represented by Many to one Cardinality.

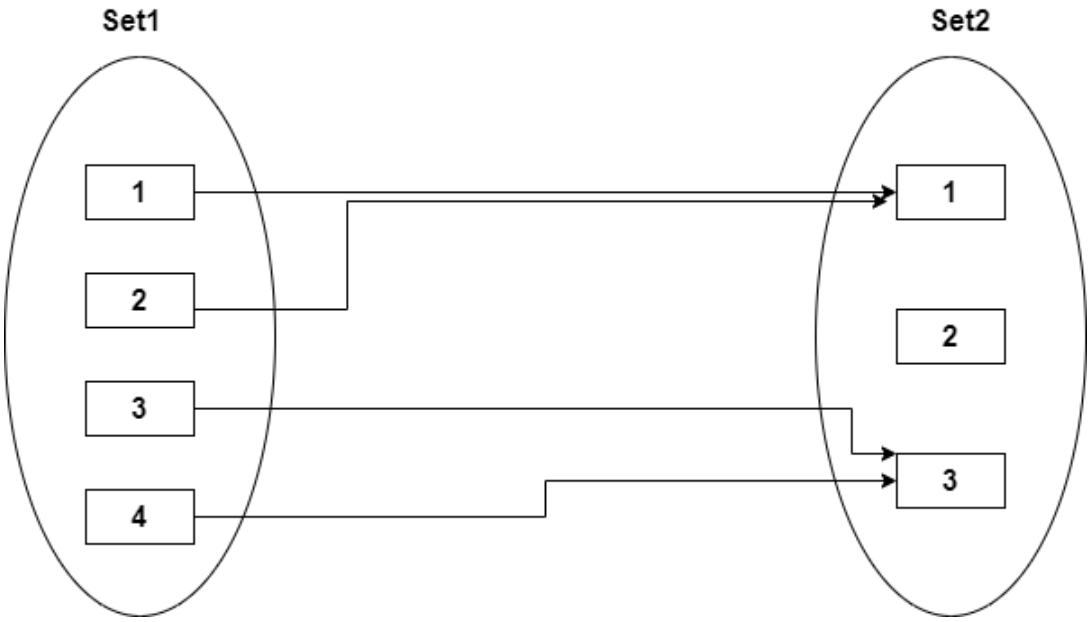


## One to Many Cardinalities:

In One-to-many cardinality mapping, from set 1, there can be a maximum single set that can make relationships with a single or more than one entity of set 2. Or we can also describe it as from set 2, more than one entity can make a relationship with only one entity of set 1.

One to one cardinality is the subset of One-to-many Cardinality. It can be represented by **1: M**.

**For Example,** in a hospital, there can be various compounders, so the relationship between the hospital and compounders can be mapped through One-to-many Cardinality.

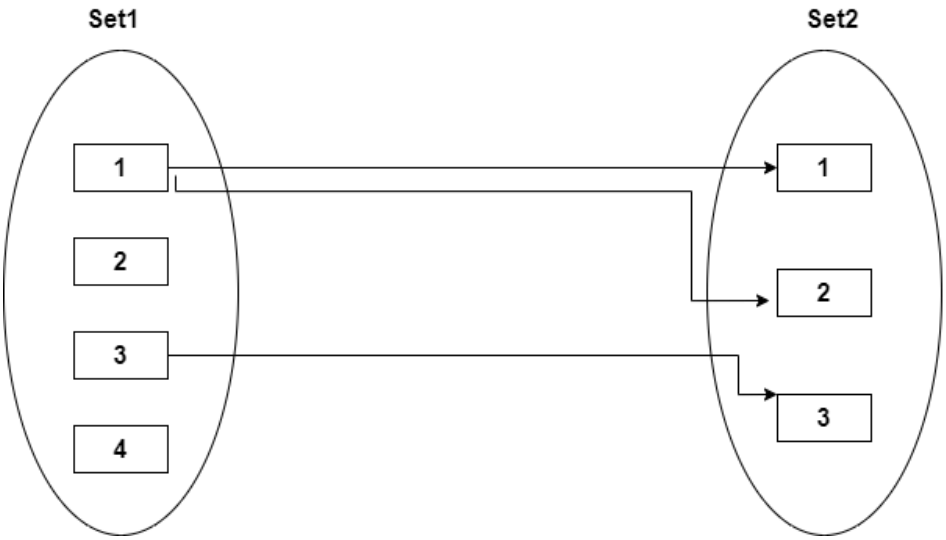

## Many to Many Cardinalities:

In many, many cardinalities mapping, there can be one or more than one entity that can associate with one or more than one entity of set 2. In the same way from the end of set 2, one or more than one entity can make a relation with one or more than one entity of set 1.

It is represented by **M: N** or **N: M**.

One to one cardinality, One to many cardinalities, and Many to one cardinality is the subset of the many to many cardinalities.

ADVERTISEMENT

**For Example,** in a college, multiple students can work on a single project, and a single student can also work on multiple projects. So, the relationship between the project and the student can be represented by many to many cardinalities.

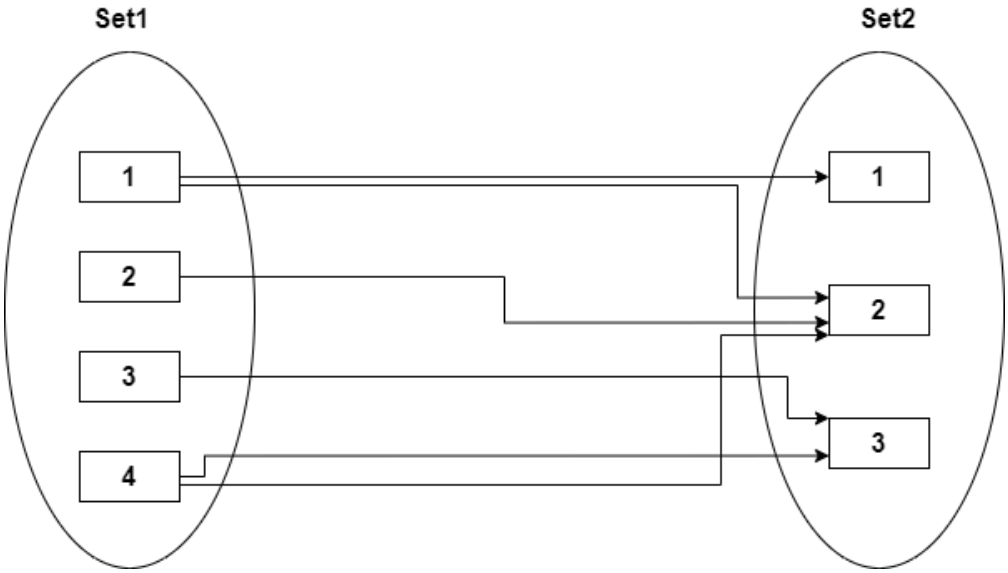


# Appropriate Mapping Cardinality

Evidently, the real-world context in which the relation set is modeled determines the Appropriate Mapping Cardinality for a specific relation set.

- We can combine relational tables with many involved tables if the Cardinality is one-to-many or many-to-one.
- One entity can be combined with a relation table if it has a one-to-one relationship and total participation, and two entities can be combined with their relation to form a single table if both of them have total participation.
- We cannot mix any two tables if the Cardinality is many-to-many.

# ACID Properties in DBMS (with examples)

DBMS is the management of data that should remain integrated when any changes are done in it. It is because if the integrity of the data is affected, whole data will get disturbed and corrupted. Therefore, to maintain the integrity of the data, there are four properties described in the database management system, which are known as the **ACID** properties. The ACID properties are meant for the transaction that goes through a different group of tasks, and there we come to see the role of the ACID properties.

In this section, we will learn and understand about the ACID properties. We will learn what these properties stand for and what does each property is used for. We will also understand the ACID properties with the help of some examples.

## ACID Properties

The expansion of the term ACID defines for:

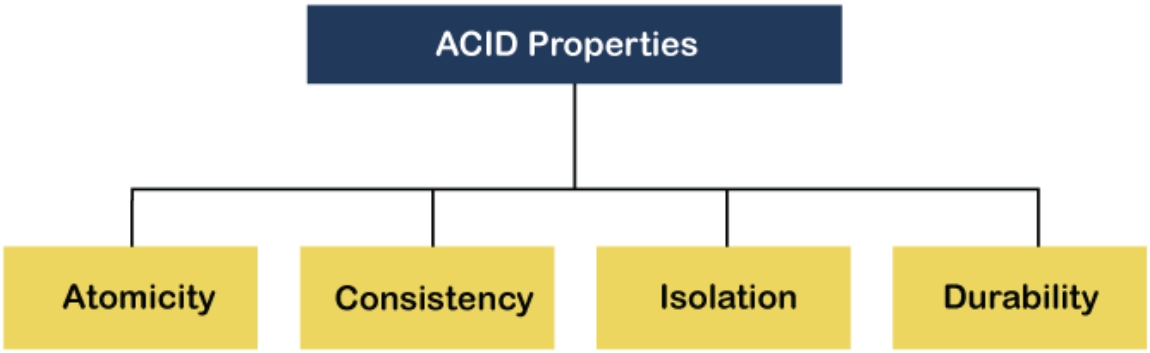


## 1) Atomicity

The term atomicity defines that the data remains atomic. It means if any operation is performed on the data, either it should be performed or executed completely or should not be executed at all. It further means that the operation should not break in between or execute partially. In the case of executing operations on the transaction, the operation should be completely executed and not partially.

**Example:** If Remo has account A having $30 in his account from which he wishes to send $10 to Sheero's account, which is B. In account B, a sum of $ 100 is already present. When $10 will be transferred to account B, the sum will become $110. Now, there will be two operations that will take place. One is the amount of $10 that Remo wants to transfer will be debited from his account A, and the same amount will get credited to account B, i.e., into Sheero's account. Now, what happens - the first operation of debit executes successfully, but the credit operation, however, fails. Thus, in Remo's account A, the value becomes $20, and to that of Sheero's account, it remains $100 as it was previously present.

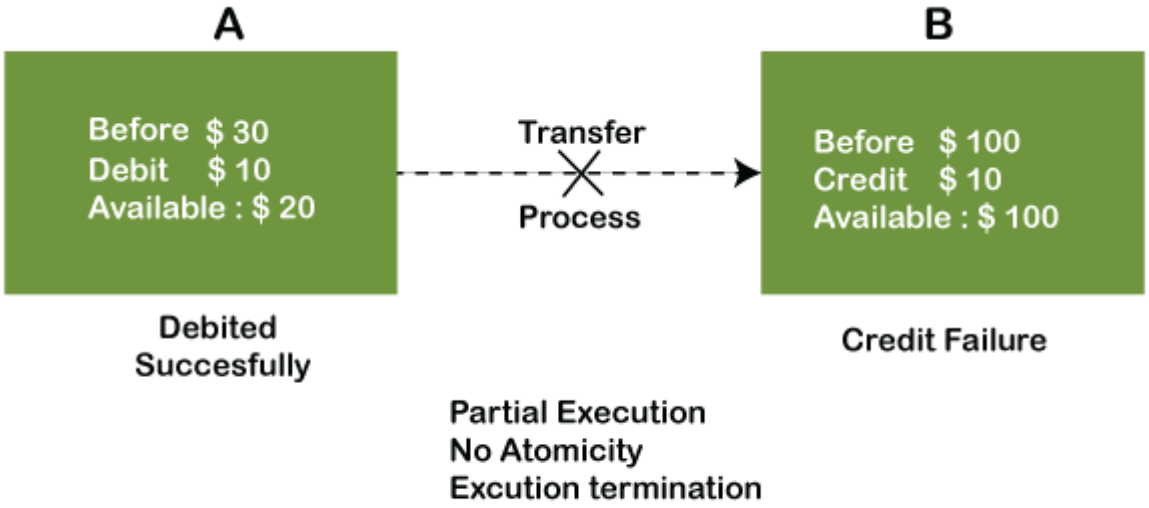


In the above diagram, it can be seen that after crediting $10, the amount is still $100 in account B. So, it is not an atomic transaction.

The below image shows that both debit and credit operations are done successfully. Thus the transaction is atomic.

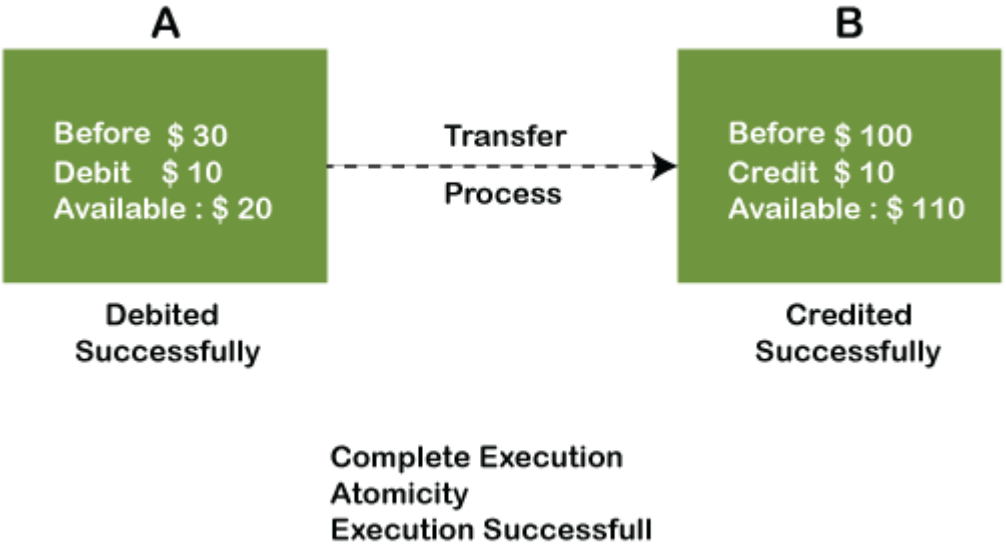


Thus, when the amount loses atomicity, then in the bank systems, this becomes a huge issue, and so the atomicity is the main focus in the bank systems.

## 2) Consistency

The word **consistency** means that the value should remain preserved always. In DBMS, the integrity of the data should be maintained, which means if a change in the database is made, it should remain preserved always. In the case of transactions, the integrity of the data is very essential so that the database remains consistent before and after the transaction. The data should always be correct.

**Example:**

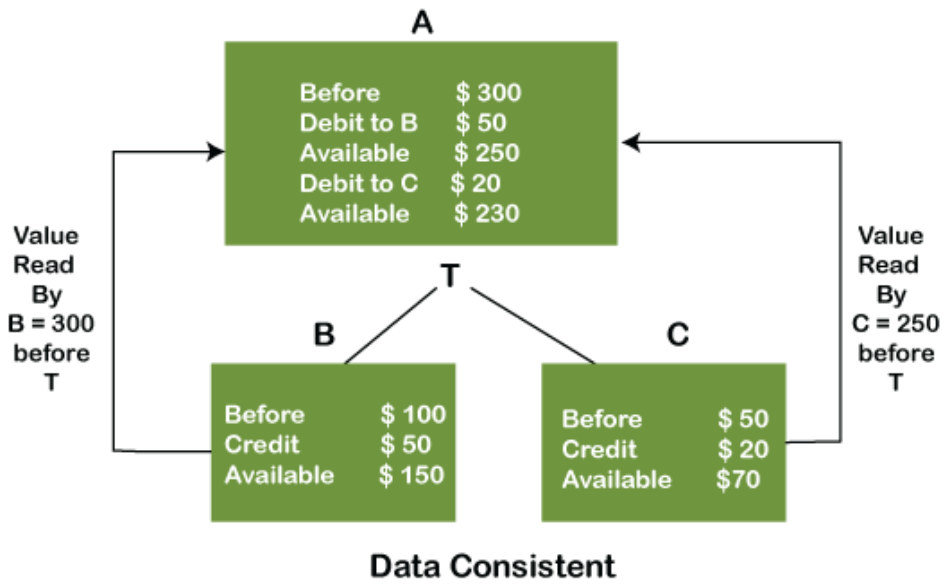


In the above figure, there are three accounts, A, B, and C, where A is making a transaction T one by one to both B & C. There are two operations that take place, i.e., Debit and Credit. Account A firstly debits $50 to account B, and the amount in account A is read $300 by B before the transaction. After the successful transaction T, the available amount in B becomes $150. Now, A debits $20 to account C, and that time, the value read by C is $250 (that is correct as a debit of $50 has been successfully done to B). The debit and credit operation from account A to C has been done successfully. We can see that the transaction is done successfully, and the value is also read correctly. Thus, the data is consistent. In case the value read by B and C is $300, which means that data is inconsistent because when the debit operation executes, it will not be consistent.

## 3) Isolation

The term 'isolation' means separation. In DBMS, Isolation is the property of a database where no data should affect the other one and may occur concurrently. In short, the operation on one database should begin when the operation on the first database gets complete. It means if two operations are being performed on two different databases, they may not affect the value of one another. In the case of transactions, when two or more transactions occur simultaneously, the consistency should remain maintained. Any changes that occur in any particular transaction will not be seen by other transactions until the change is not committed in the memory.

**Example:** If two operations are concurrently running on two different accounts, then the value of both accounts should not get affected. The value should remain persistent. As you can see in the below diagram, account A is making T1 and T2 transactions to account B and C, but both are executing independently without affecting each other. It is known as Isolation.

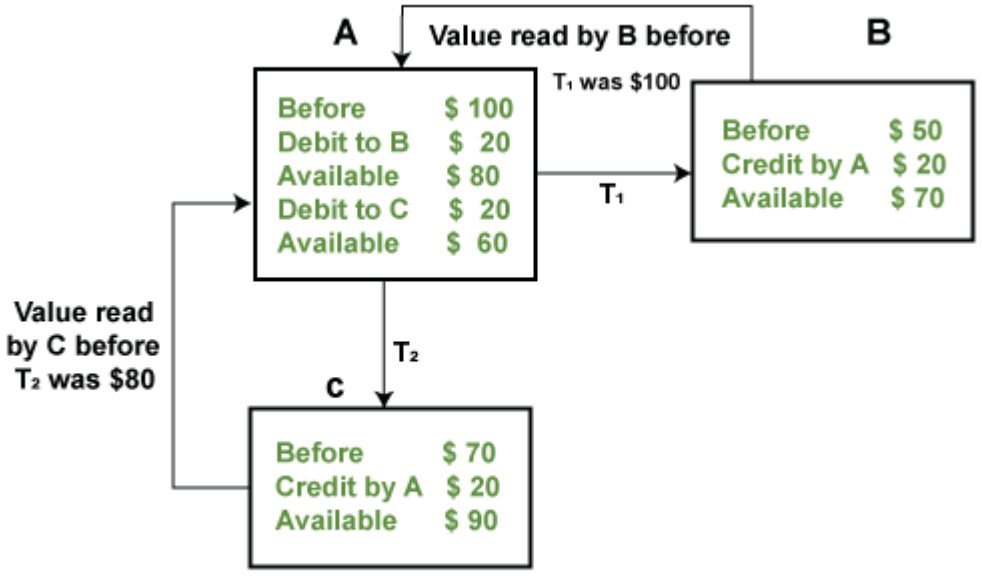


**Isolation - Independent execution of $T_1$ & $T_2$ by A**

## 4) Durability

Durability ensures the permanency of something. In DBMS, the term durability ensures that the data after the successful execution of the operation becomes permanent in the database. The durability of the data should be so perfect that even if the system fails or leads to a crash, the database still survives. However, if gets lost, it becomes the responsibility of the recovery manager for ensuring the durability of the database. For committing the values, the COMMIT command must be used every time we make changes.

Therefore, the ACID property of DBMS plays a vital role in maintaining the consistency and availability of data in the database.

Thus, it was a precise introduction of ACID properties in DBMS. We have discussed these properties in the transaction section also.

# Database Languages in DBMS

- A DBMS has appropriate languages and interfaces to express database queries and updates.
- Database languages can be used to read, store and update the data in the database.

## Types of Database Languages

## 1. Data Definition Language (DDL)

- **DDL** stands for **D**ata **D**efinition **L**anguage. It is used to define database structure or pattern.
- It is used to create schema, tables, indexes, constraints, etc. in the database.
- Using the DDL statements, you can create the skeleton of the database.
- Data definition language is used to store the information of metadata like the number of tables and schemas, their names, indexes, columns in each table, constraints, etc.

Here are some tasks that come under DDL:

- **Create:** It is used to create objects in the database.
- **Alter:** It is used to alter the structure of the database.
- **Drop:** It is used to delete objects from the database.
- **Truncate:** It is used to remove all records from a table.
- **Rename:** It is used to rename an object.
- **Comment:** It is used to comment on the data dictionary.

These commands are used to update the database schema that's why they come under Data definition language.

## 2. Data Manipulation Language (DML)

**DML** stands for **D**ata **M**anipulation **L**anguage. It is used for accessing and manipulating data in a database. It handles user requests.

Here are some tasks that come under DML:

- **Select:** It is used to retrieve data from a database.
- **Insert:** It is used to insert data into a table.
- **Update:** It is used to update existing data within a table.

- **Delete:** It is used to delete all records from a table.
- **Merge:** It performs UPSERT operation, i.e., insert or update operations.
- **Call:** It is used to call a structured query language or a Java subprogram.
- **Explain Plan:** It has the parameter of explaining data.
- **Lock Table:** It controls concurrency.

## 3. Data Control Language (DCL)

- **DCL** stands for **D**ata **C**ontrol **L**anguage. It is used to retrieve the stored or saved data.
- The DCL execution is transactional. It also has rollback parameters.

  (But in Oracle database, the execution of data control language does not have the feature of rolling back.)

Here are some tasks that come under DCL:

- **Grant:** It is used to give user access privileges to a database.
- **Revoke:** It is used to take back permissions from the user.

There are the following operations which have the authorization of Revoke:

CONNECT, INSERT, USAGE, EXECUTE, DELETE, UPDATE and SELECT.

## 4. Transaction Control Language (TCL)

TCL is used to run the changes made by the DML statement. TCL can be grouped into a logical transaction.

Here are some tasks that come under TCL:

- **Commit:** It is used to save the transaction on the database.
- **Rollback:** It is used to restore the database to original since the last Commit.