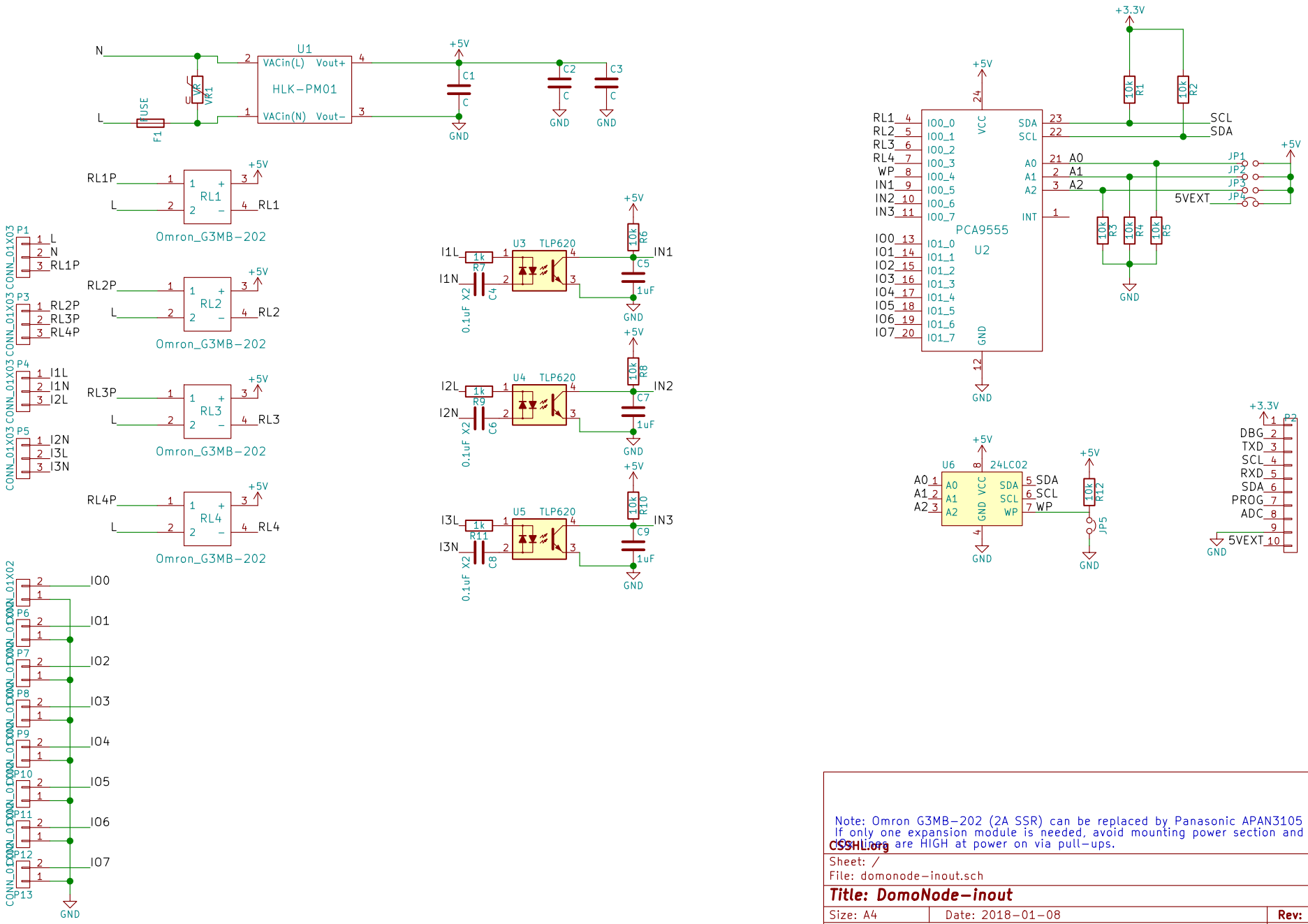

Note: Omron G3MB-202 (2A SSR) can be replaced by Panasonic APAN3105 (5A relays)
If only one expansion module is needed, avoid mounting power section and close J4.
CSSHLong: Lines are HIGH at power on via pull-ups.

Sheet: /
File: domonode-inout.sch

Title: DomoNode-inout

Size: A4	Date: 2018-01-08	Rev: 1.1.1
KiCad E.D.A. kicad 4.0.2+dfsg1-stable		Id: 1/1