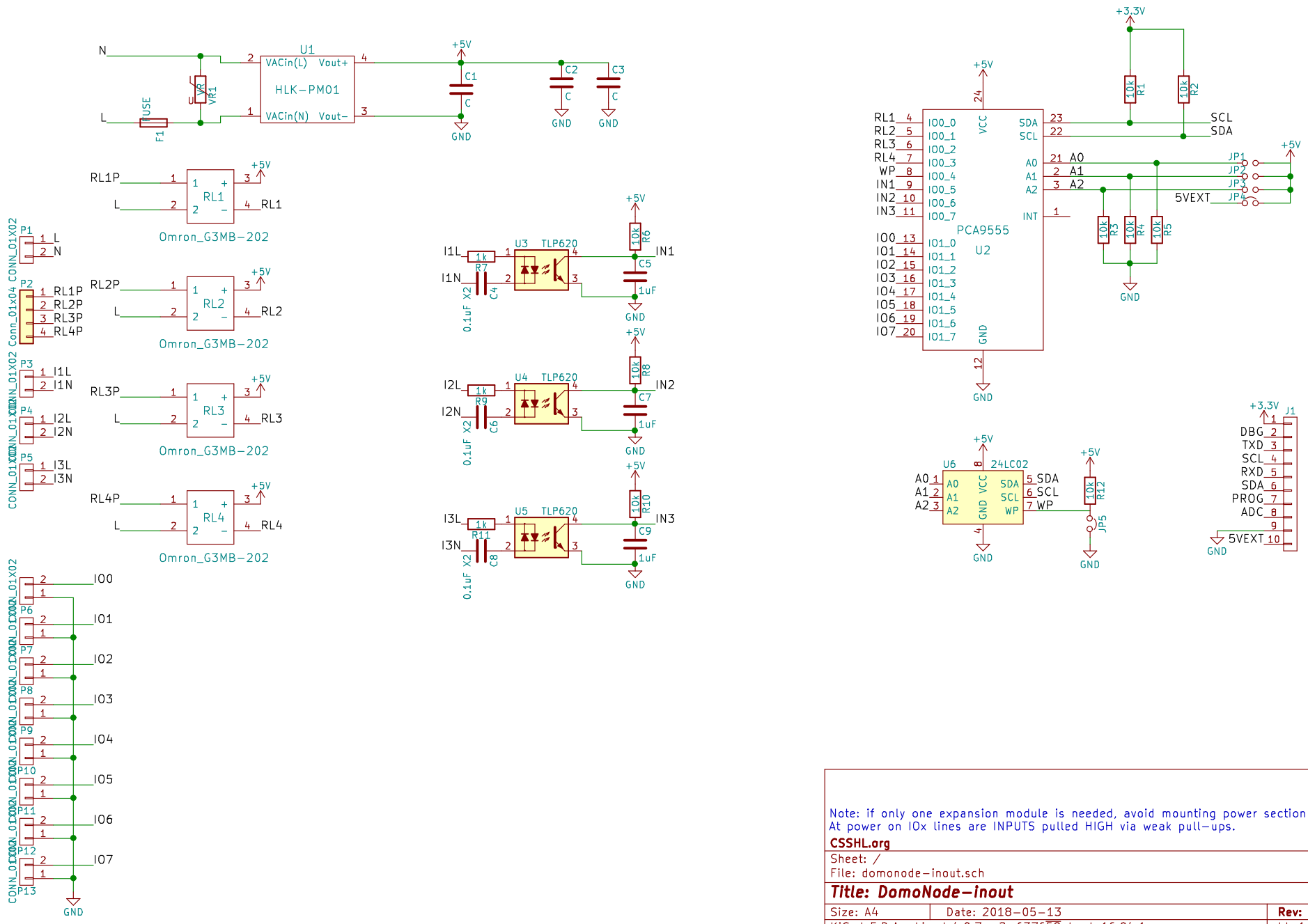

Note: if only one expansion module is needed, avoid mounting power section and close J4.
At power on IOx lines are INPUTS pulled HIGH via weak pull-ups.

CSSHL.org

Sheet: /
File: domonode-inout.sch

Title: DomoNode-inout

Size: A4	Date: 2018-05-13	**Rev: 1.1.2**
KiCad E.D.A. kicad 4.0.7-e2-637658ubuntu16.04.1		Id: 1/1