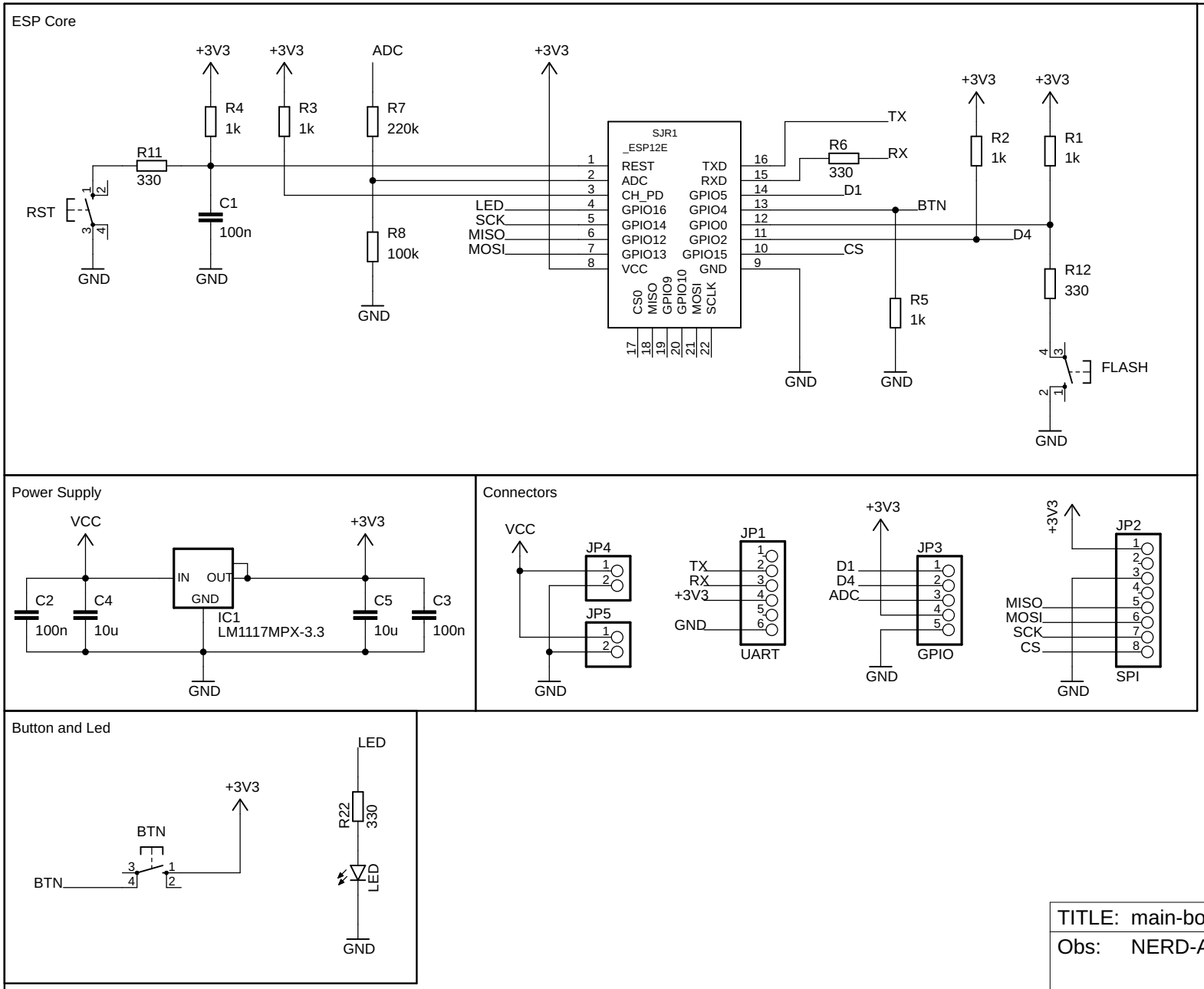

TITLE: main-board-v2	
Obs: NERD-AETTUA	REV:
Author:	
Date: not saved!	Sheet: 1/1