POS.	QTY.	DRAW / PART NUMBER	DESCRIPTION	SUPPLIER
1	1	O-1637-004	Mounting adapter for load cell	PROTOTYPVERKSTADEN
2	1	O-1637-015	Mounting adapter for load cell	PROTOTYPVERKSTADEN
3	1	O-1637-017	Mounting adapter for load cell	PROTOTYPVERKSTADEN
4	2	SMD2387-M2-100	S250 and S251 - Miniature Platform Load Cell 10kg M3	STRAIN MEASUREMENT DEVICES

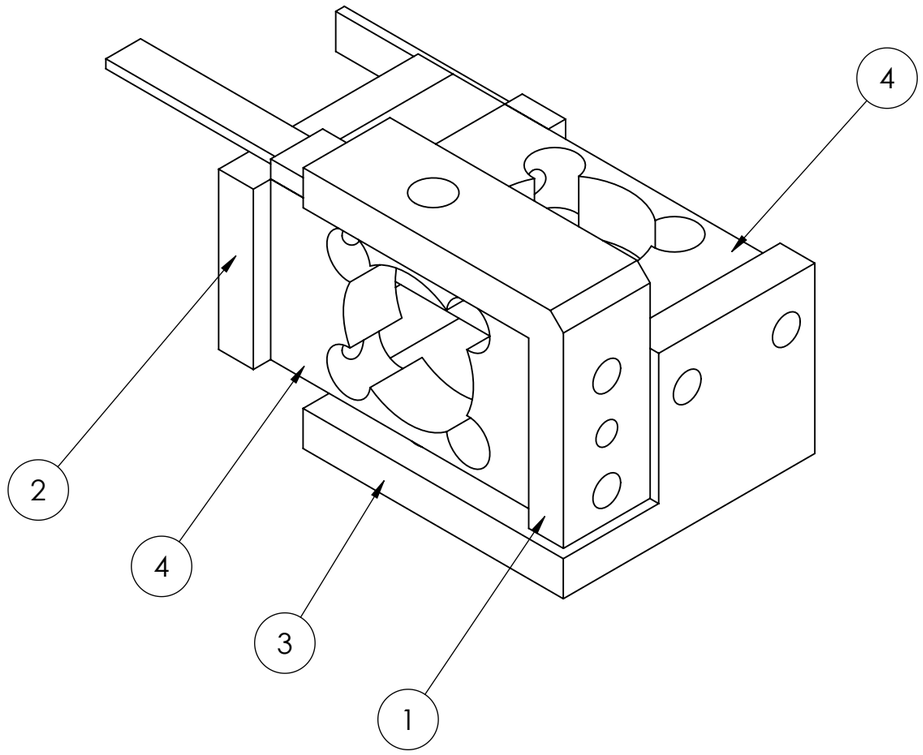

www.fia.se

General tolerance for machining: ISO-2768-m	General tolerance for welding	General surface roughness: Ra 3,2	Sharp edges broken: 0.2	
Material	Surface treatment		Scale: 2:1	Size: A3
Drawn by: CG	Drawn date: 2016-06-30	Document no.: O-1637-016	Rev No	Sheet No: 1/1
Approved by	Approved date	Description: Measurement unit		