Indoor Helium Hotspot Overview

- Quick Specifications
- Package Contents
- Block Diagram
- Supported Regions
- Antenna Specifications
- Dimensions
- Interfaces
  - Connectors
  - Status Indicator
  - Button
- Firmware
- Unit Information
- Certifications
  - Certification List
  - Certification Codes
  - FCC Statement

Figure 1: Indoor Hotspot Included

The Nebra Indoor Helium Hotspot is a compact & elegant solution to provide Helium LongFi coverage and start mining HNT with ease.

Quick Specifications

Specification	Nebra Indoor Hotspot
RRP	£350 ex VAT
Case	Plastic (ABS)
Ingress Protection	IP40
Dimensions	150x150x50 mm (Excluding Antenna)

Specification	Nebra Indoor Hotspot
Weight	0.4 Kg
Power Requirement	9-16V DC @ 15W
Average Power Consumption	~8W*
Annual Power Consumption	~70kWh
Maximum TX Power	24-27dBm**
Network Connectivity	10/100 Ethernet, 2.4Ghz 802.11N Wi-Fi
Antenna Connection	RP-SMA Female
Rated Ambient Temperature	20-30C
Base SOM	Raspberry Pi CM3+
CPU Specification	Broadcom BCM2837B0, Quad Core Cortex-A53 (ARMv8) 64-bit SoC @ 1.2GHz
High Endurance Storage	32GB
RAM	1GB LPDDR2 SDRAM
Internal PCB Dimensions	~ 139x139x30 mm

* Average Power Consumption Measured At Mains,

** Maximum TX Power may be capped to a lower amount in some regions.

Package Contents

- The Nebra Helium Indoor Hotspot
- RP-SMA LoRa Antenna
- Worldwide 12V 1.5A Power Adapter (with UK, US, EU and Aus plug heads)
- 1m Cat5e Ethernet cable
- 2 x serial number QR code stickers
- 2 x Nebra stickers

Please note the above image is for illustrative purposes only, colours of some parts may change.

Block Diagram

Supported Regions

The Nebra Indoor Hotspot comes in three frequency versions:

Frequency	Supported Regions
433 Mhz	Coming Soon
470 Mhz	CN470

Frequency	Supported Regions
868 Mhz	EU868, IN865, RU864
915 Mhz	US915, AU915, AS923-1/2/3/4, KR920

The frequency is set upon initialisation by the Helium Network.

Antenna Specifications

Specification	470Mhz Model	868 & 915Mhz Models
Frequency Range	420-480	860-930 Mhz
Peak Gain	3 dBi	3 dBi
VSWR	< 2.3	< 1.8
Input Impediance	50 Ohms	50 Ohms
Length	17.2CM	20.7CM

Dimensions

The Nebra Indoor Hotspot is 150x150x50MM In size when nothing is connected.

Approximatley 175x150x50MM space is required when accounting in space required for connectors.

Interfaces

Connectors

1. **9-16V @ 15W DC 6.5MMx2.0MM Barrel Jack**
2. **LED Indicator.**
3. **Interface Button**
4. **RP-SMA LoRa Connector**
5. **Ethernet Connector**

Status Indicator The Nebra Indoor Hotspot has a status indicator as shown above.

The Top LED will act accordingly:

- Off - Software has not started yet.
- On - Operating as normal
- Slow Blinking - Bluetooth Pairing is enabled
- Fast Blinking - There is potentially a fault. Please check diagnostics page.

The Bottom LED acts accordingly:

Figure 2: Indoor Hotspot Included

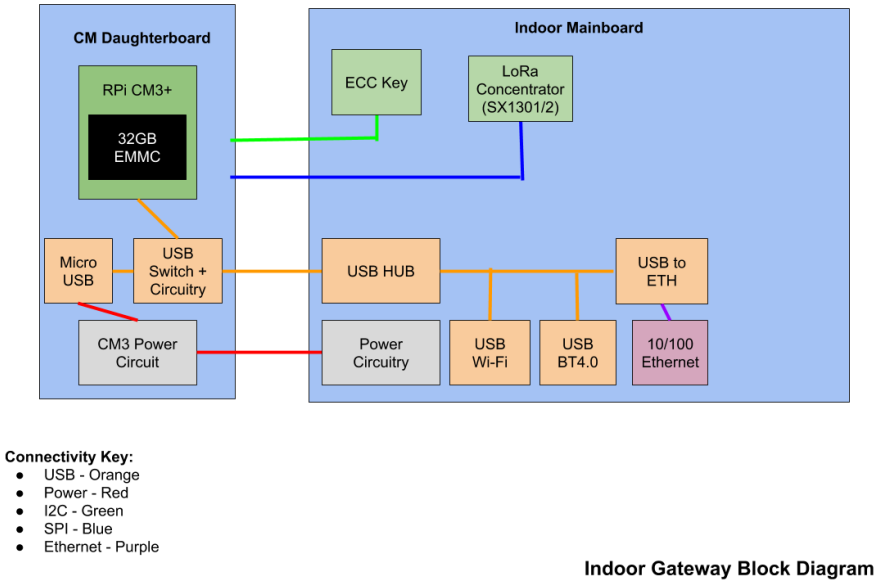

Figure 3: Indoor Hotspot Block Diagram

- Off - Unit is receiving no power.
- On - Unit is powered up.

Button The Nebra Indoor Hotspot has a button on the back of the unit.

This is used to re-enable bluetooth pairing on the hotspot, hold the button in for approximately 15 seconds then release to start pairing. The top light should start blinking slowly if successful.

Firmware

The Nebra Hotspots run a customised software to provide high reliability and ensure your units are as up to date as they can be.

Approximately your hotspot will update once a week in an automatic process, we will announce updates via various social media platforms when they happen.

The software is open source and available on our Helium Miner Software repo on GitHub.

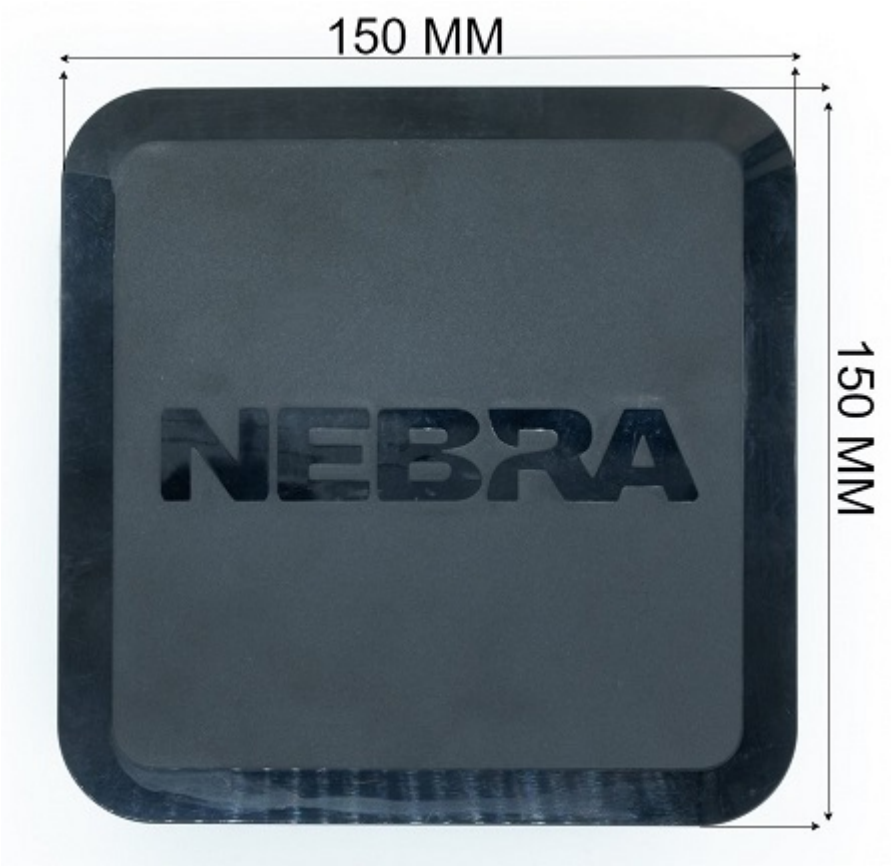

Figure 4: Indoor Hotspot Connectors

Figure 5: Indoor Hotspot Connectors

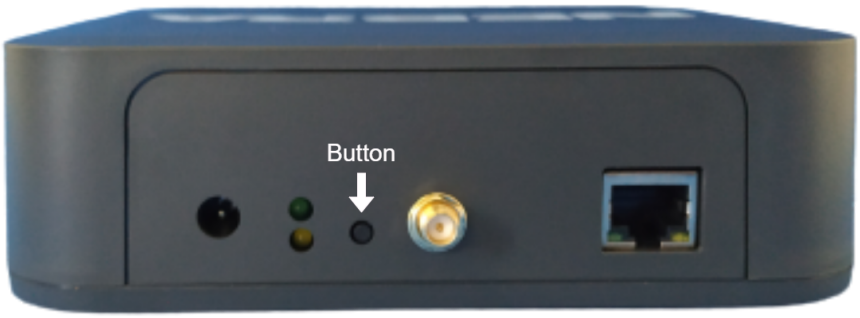

Figure 6: Indoor Hotspot Connectors

Unit Information

Each unit has a sticker located on the base of the unit.

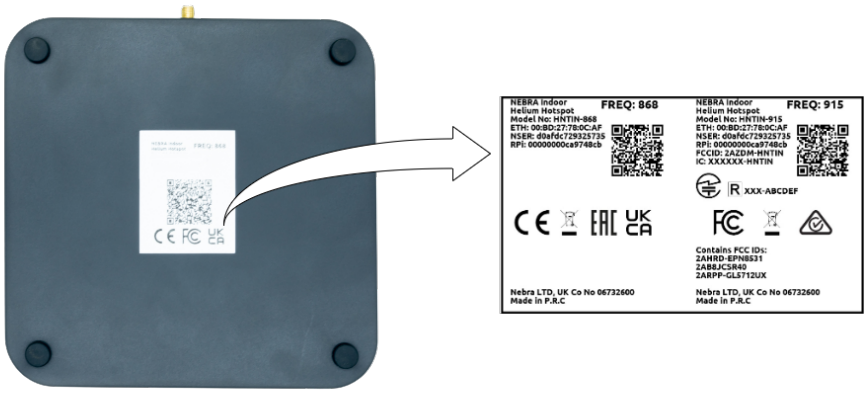

Figure 7: Indoor Hotspot Base

This includes the following important Information:

- **FREQ**: Frequency of the Unit
- **ETH**: Ethernet MAC address
- **NSER**: Nebra Serial Number
- **RPi**: Raspberry Pi Serial Number

You will require some of this information when linking your unit to our remote management dashboard.

Certifications

We are working on getting the Nebra Indoor Hotspot certified in multiple regions. As we have results from the certification process we will post them here.

Certification List

Approval	Countries Covered	Hardware Frequency	Status	Frequency Plans
CE	European Economic Area	868 Mhz	Completed	EU 868
UKCA	United Kingdom	868 Mhz	Completed	EU 868
FCC	United States of America	915 Mhz	Completed	US 915
ISED	Canada	915 Mhz	In Progress	US 915
RCM	Australia & New Zealand	915 Mhz	Completed	AU 915
MIC	Japan	915 Mhz	In Progress	AS 923-1
SRRC	China	470 Mhz	In Progress	CN 470
EAC	Russia	868 Mhz	In Progress	RU 864
WPC	India	868 Mhz	In Progress	IN 865

All certification related documents can be viewed in the certification folder for our indoor miner.

Certification Codes

Certification	ID Code
FCC	2AZDM-HNTIN
ISED	27187-HNTIN

FCC Statement This device complies with Part 15 of the FCC Rules. Operation is subject to the following two conditions:

1. This device may not cause harmful interference.
2. This device must accept any interference received, including interference that may cause undesired operation.

Changes or modifications not expressly approved by the party responsible for compliance could void the user's authority to operate the equipment.

NOTE: This equipment has been tested and found to comply with the limits for a Class B digital device, pursuant to Part 15 of the FCC Rules. These limits are designed to provide reasonable protection against harmful interference in a residential installation. This equipment generates uses and can radiate radio frequency energy and, if not installed and used in accordance with the

instructions, may cause harmful interference to radio communications. However, there is no guarantee that interference will not occur in a particular installation.

If this equipment does cause harmful interference to radio or television reception, which can be determined by turning the equipment off and on, the user is encouraged to try to correct the interference by one or more of the following measures: * Reorient or relocate the receiving antenna. * Increase the separation between the equipment and receiver. * Connect the equipment into an outlet on a circuit different from that to which the receiver is connected. * Consult the dealer or an experienced radio/TV technician for help.