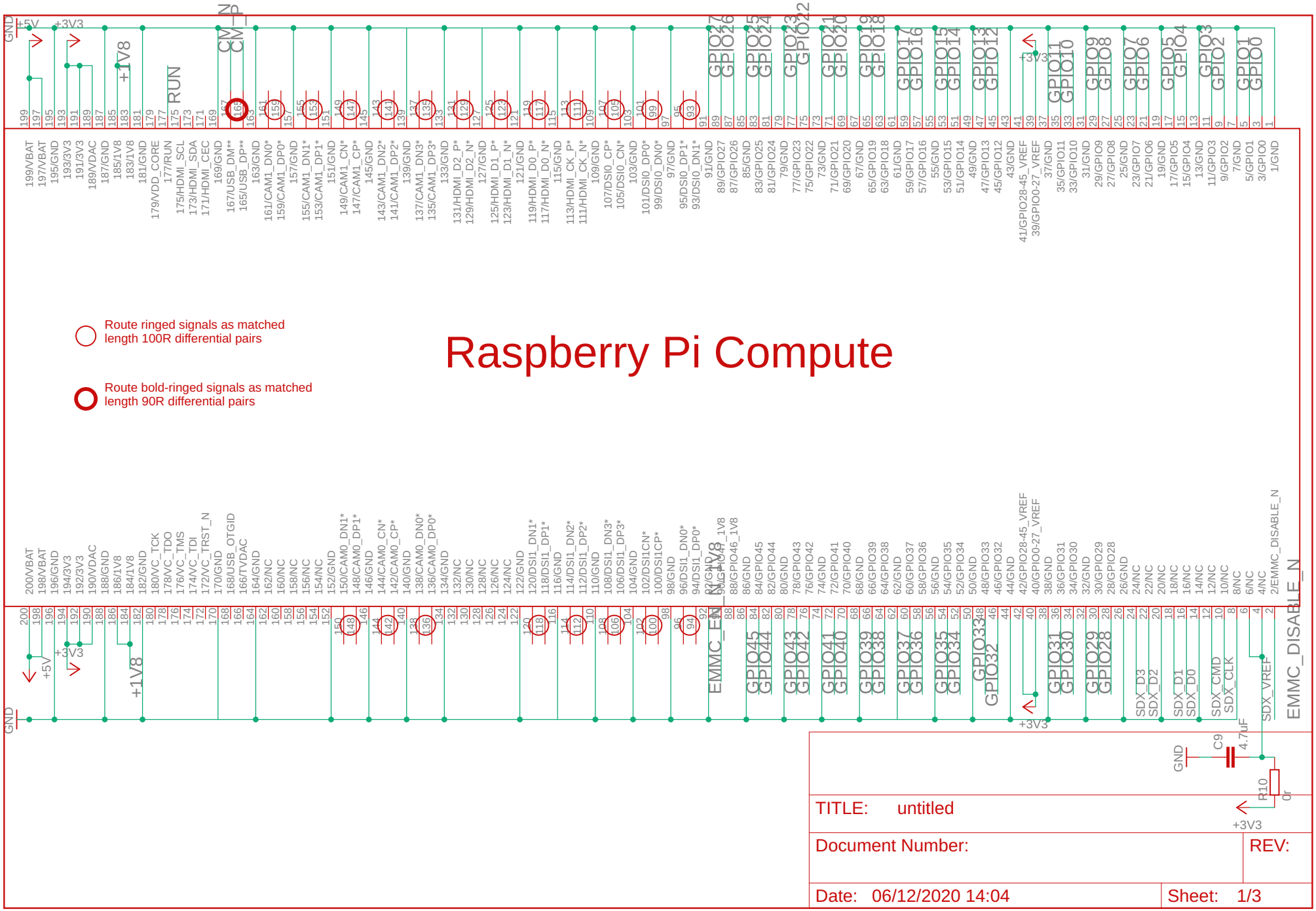
Raspberry Pi Compute
Route ringed signals as matched length 100R differential pairs
Route bold-ringed signals as matched length 90R differential pairs
TITLE: untitled
Document Number:
REV:
Date: 06/12/2020 14:04
Sheet: 1/3

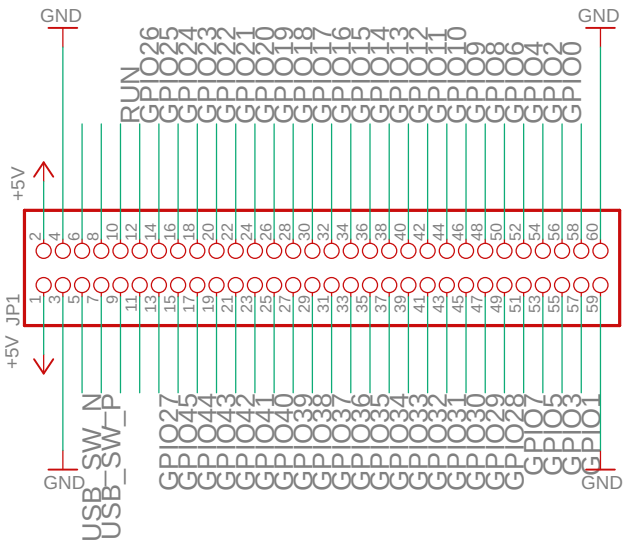

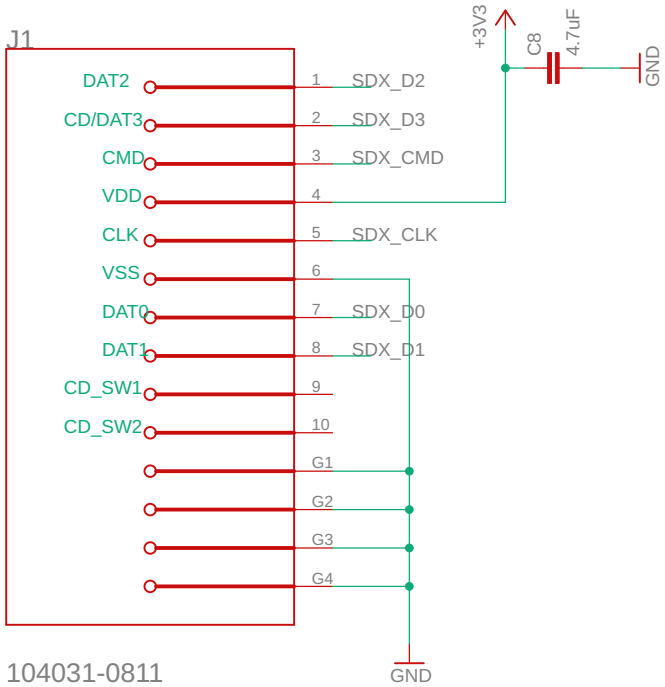

untitled	
06/12/2020 14:04	
Sheet: 2/3	

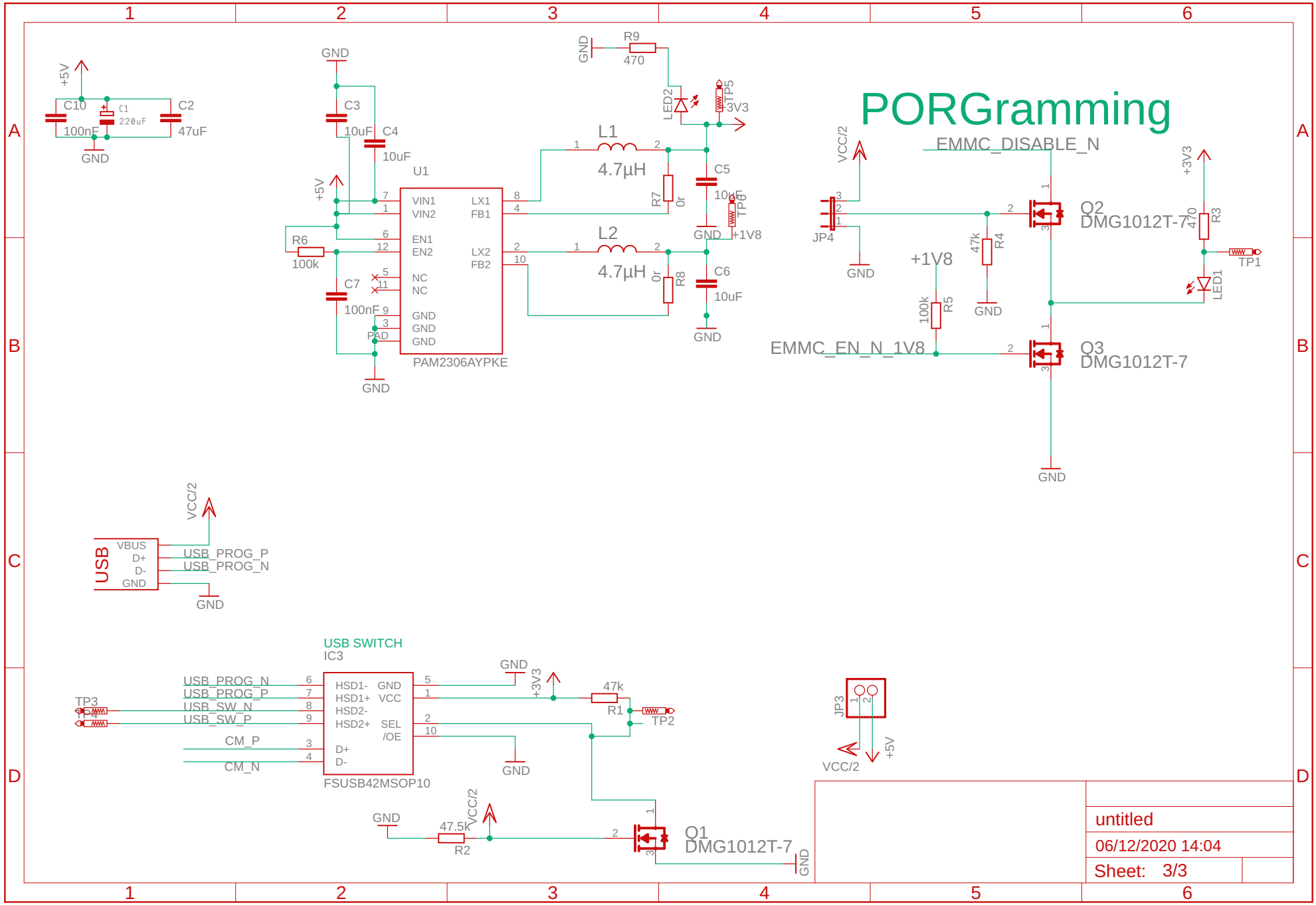
PORGramming
EMMC_DISABLE_N
EMMC_EN_N_1V8
+5V
C10
100nF
C1
220uF
C2
47uF
GND
C3
10uF
C4
10uF
U1
VIN1
VIN2
EN1
EN2
NC
NC
GND
GND
GND
PAD
LX1
FB1
LX2
FB2
PAM2306AYPKE
R6
100k
C7
100nF
R9
470
LED2
TP5
3V3
L1
4.7µH
L2
4.7µH
R7
0r
R8
0r
C5
10uF
TP6
+1V8
C6
10uF
VCC/2
JP4
O2
DMG1012T-7
O3
DMG1012T-7
47k
R4
100k
R5
+3V3
470
R3
TP1
LED1
USB
VBUS
D+
D-
GND
USB_PROG_P
USB_PROG_N
USB SWITCH
IC3
HSD1-
HSD1+
HSD2-
HSD2+
D+
D-
GND
VCC
SEL
/OE
FSUSB42MSOP10
USB_SW_N
USB_SW_P
CM_P
CM_N
TP3
47k
R1
TP2
JP3
47.5k
R2
O1
DMG1012T-7
untitled
06/12/2020 14:04
Sheet: 3/3