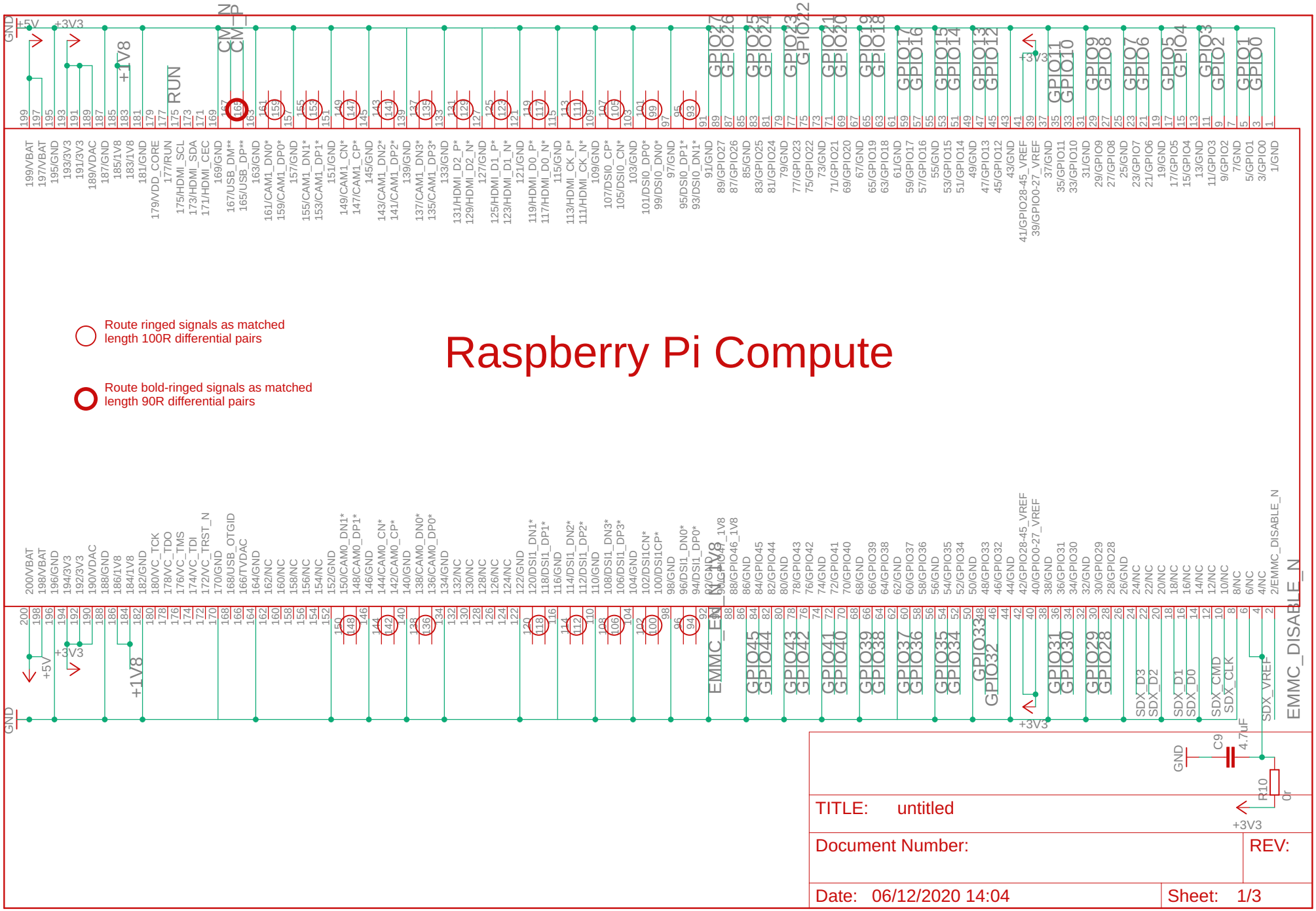
Raspberry Pi Compute
Route ringed signals as matched length 100R differential pairs
Route bold-ringed signals as matched length 90R differential pairs
TITLE: untitled
Document Number:
REV:
Date: 06/12/2020 14:04
Sheet: 1/3

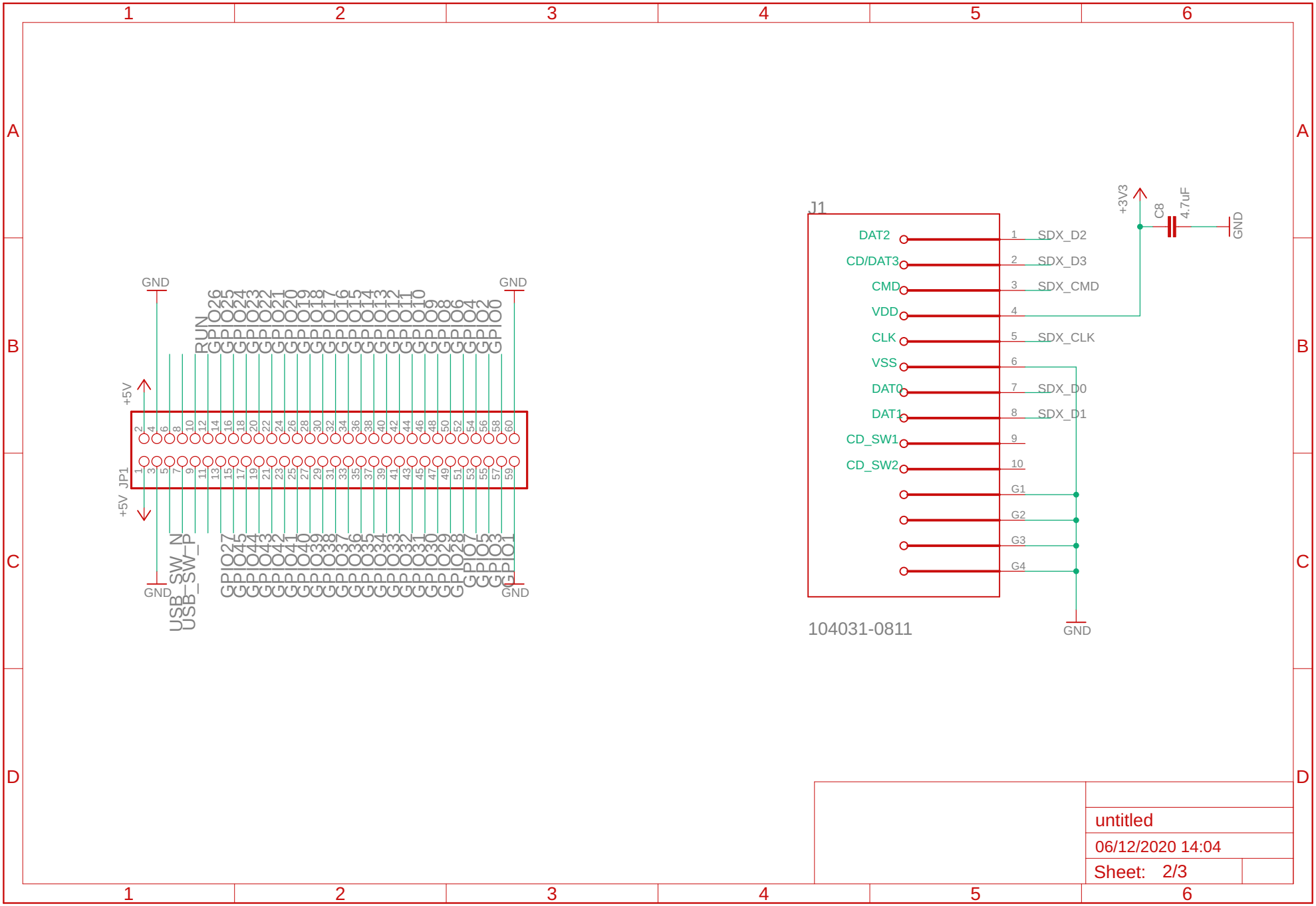

untitled

06/12/2020 14:04

Sheet: 2/3

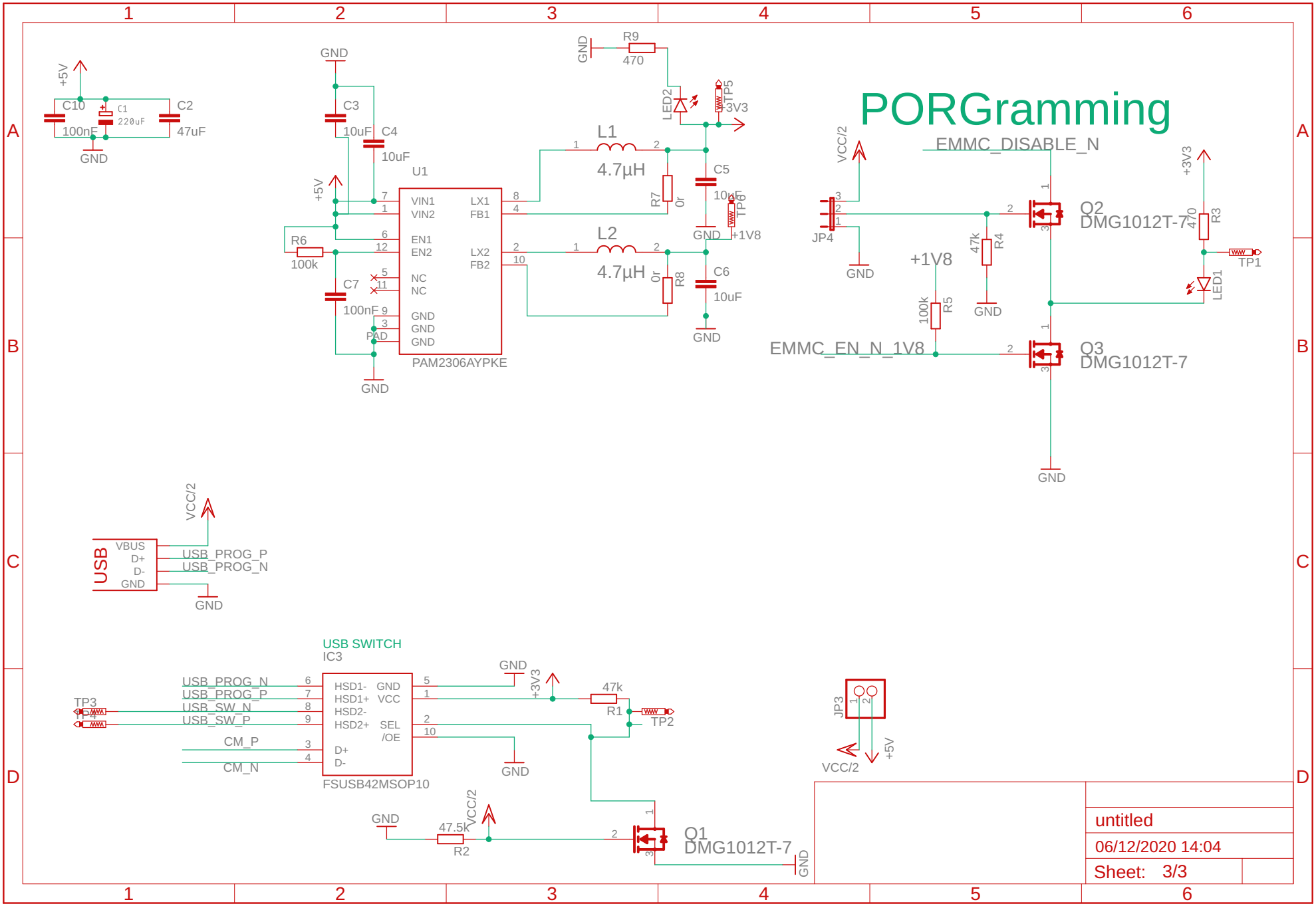

17/06/2021 20:11 /home/ryan/EAGLE/projects/computeModuleDaughterV2/untitled.sch (Sheet: 3/3)