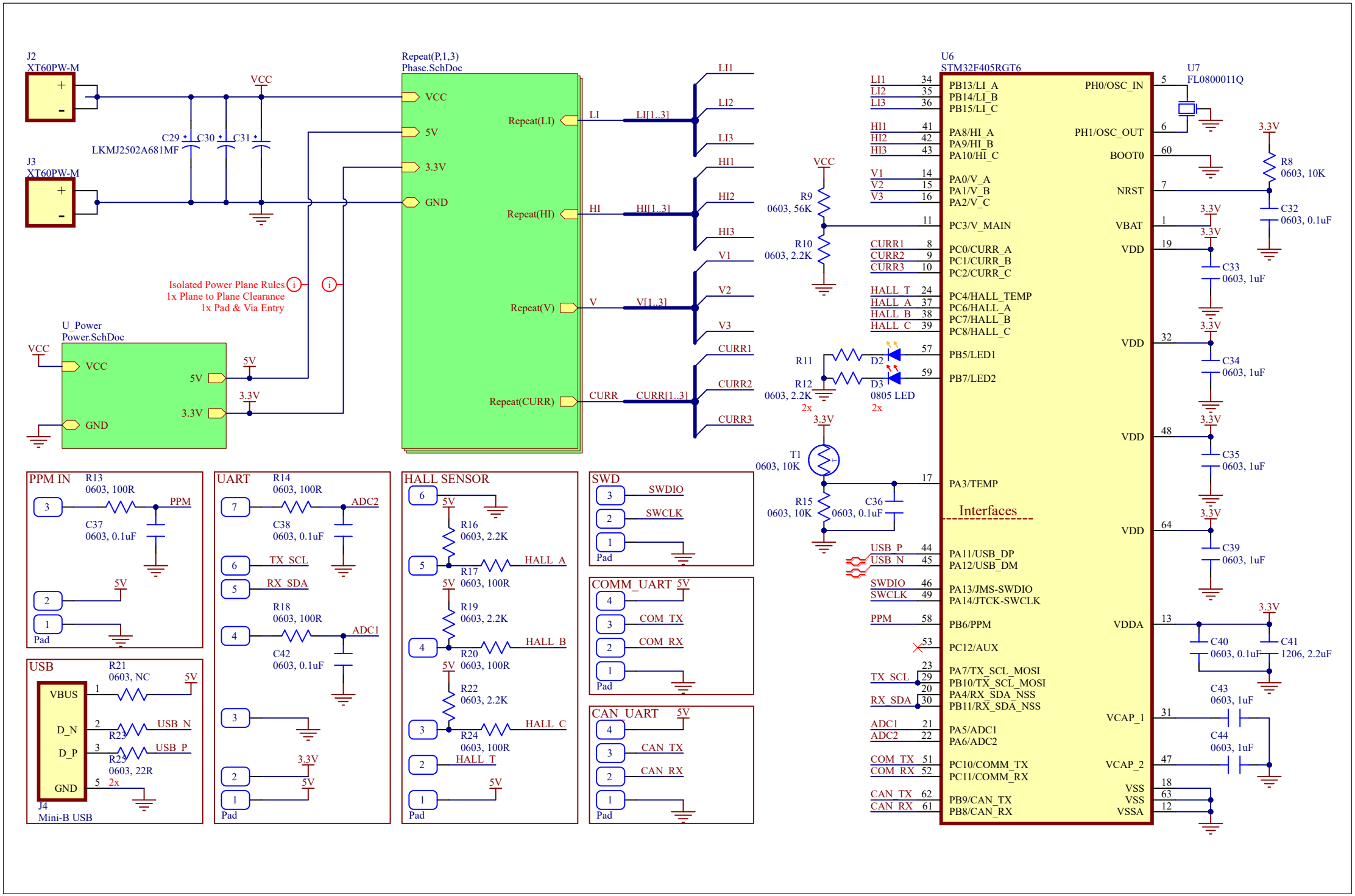
J2
XT60PW-M
J3
XT60PW-M
VCC
C29
C30
C31
LKMJ2502A681MF
Isolated Power Plane Rules
1x Plane to Plane Clearance
1x Pad & Via Entry
U_Power
Power.SchDoc
VCC
5V
3.3V
GND
Repeat(P,1,3)
Phase.SchDoc
Repeat(LI)
Repeat(HI)
Repeat(V)
Repeat(CURR)
LI
HI
V
CURR
LI[1..3]
HI[1..3]
V[1..3]
CURR[1..3]
LI1
LI2
LI3
HI1
HI2
HI3
V1
V2
V3
CURR1
CURR2
CURR3
U6
STM32F405RGT6
PB13/LI_A
PB14/LI_B
PB15/LI_C
PA8/HI_A
PA9/HI_B
PA10/HI_C
PA0/V_A
PA1/V_B
PA2/V_C
PC3/V_MAIN
PC0/CURR_A
PC1/CURR_B
PC2/CURR_C
PC4/HALL_TEMP
PC6/HALL_A
PC7/HALL_B
PC8/HALL_C
PB5/LED1
PB7/LED2
PA3/TEMP
Interfaces
PA11/USB_DP
PA12/USB_DM
PA13/JMS-SWDIO
PA14/JTCK-SWCLK
PB6/PPM
PC12/AUX
PA7/TX_SCL_MOSI
PB10/TX_SCL_MOSI
PA4/RX_SDA_NSS
PB11/RX_SDA_NSS
PA5/ADC1
PA6/ADC2
PC10/COMM_TX
PC11/COMM_RX
PB9/CAN_TX
PB8/CAN_RX
PH0/OSC_IN
PH1/OSC_OUT
BOOT0
NRST
VBAT
VDD
VDDA
VCAP_1
VCAP_2
VSS
VSSA
U7
FL0800011Q
R8
0603, 10K
C32
0603, 0.1uF
C33
0603, 1uF
C34
0603, 1uF
C35
0603, 1uF
C39
0603, 1uF
C40
0603, 0.1uF
C41
1206, 2.2uF
C43
0603, 1uF
C44
0603, 1uF
R9
0603, 56K
R10
0603, 2.2K
R11
R12
0603, 2.2K
2x
D2
D3
0805 LED
2x
T1
0603, 10K
R15
0603, 10K
C36
0603, 0.1uF
PPM IN
R13
0603, 100R
C37
0603, 0.1uF
PPM
Pad
USB
R21
0603, NC
VBUS
D_N
D_P
GND
R23
R25
0603, 22R
2x
USB_N
USB_P
J4
Mini-B USB
UART
R14
0603, 100R
C38
0603, 0.1uF
ADC2
TX_SCL
RX_SDA
R18
0603, 100R
C42
0603, 0.1uF
ADC1
HALL SENSOR
R16
0603, 2.2K
R17
0603, 100R
R19
0603, 2.2K
R20
0603, 100R
R22
0603, 2.2K
R24
0603, 100R
HALL_A
HALL_B
HALL_C
HALL_T
SWD
SWDIO
SWCLK
COMM_UART
COM_TX
COM_RX
CAN_UART
CAN_TX
CAN_RX

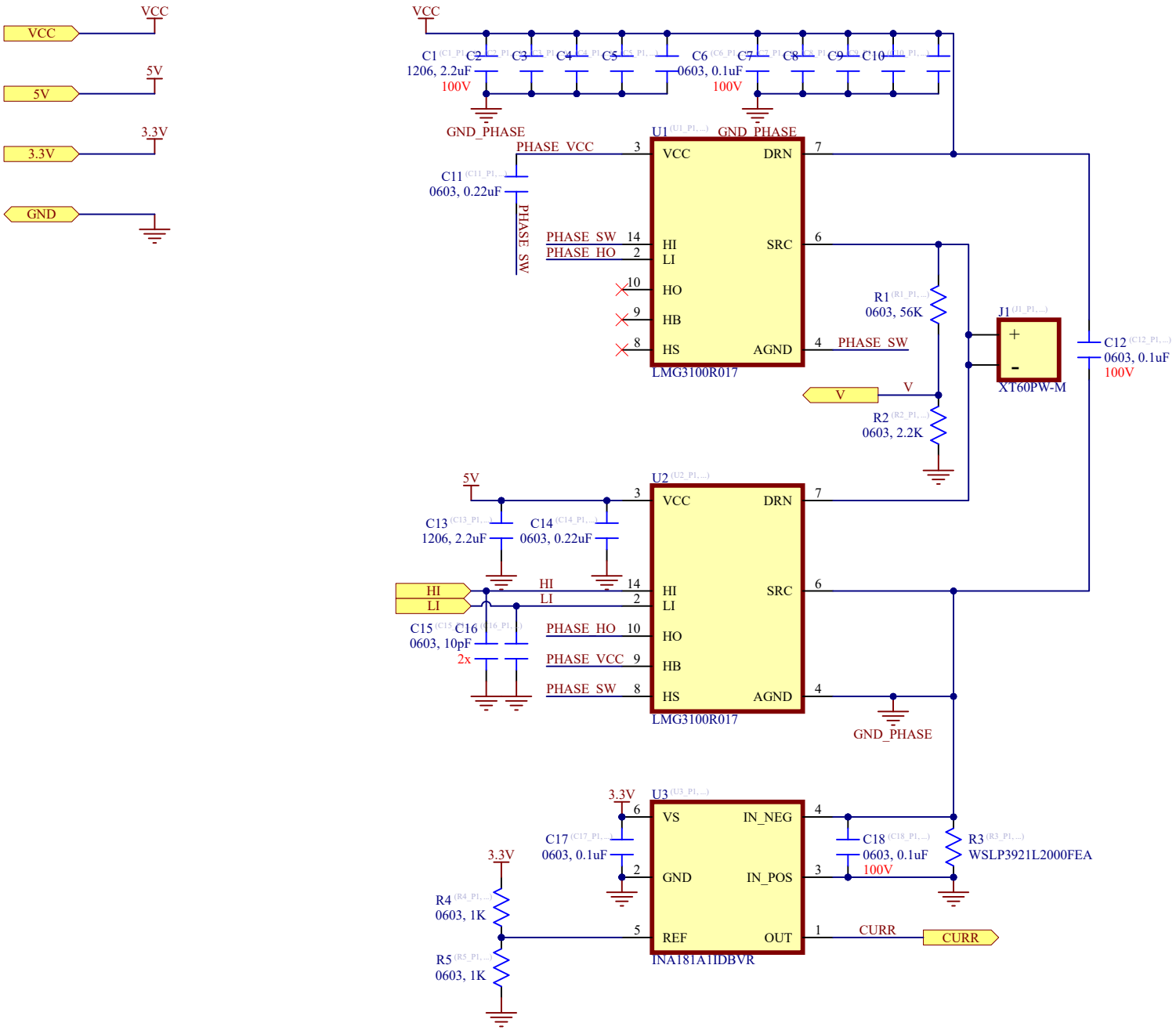
VCC
5V
3.3V
GND
C1
1206, 2.2uF
100V
C2
C3
C4
C5
C6
0603, 0.1uF
100V
C7
C8
C9
C10
GND_PHASE
U1
PHASE_VCC
C11
0603, 0.22uF
PHASE_SW
VCC
DRN
HI
LI
SRC
HO
HB
HS
AGND
LMG3100R017
R1
0603, 56K
R2
0603, 2.2K
J1
XT60PW-M
C12
0603, 0.1uF
100V
U2
C13
1206, 2.2uF
C14
0603, 0.22uF
C15
0603, 10pF
2x
C16
PHASE_HO
PHASE_VCC
U3
VS
IN_NEG
GND
IN_POS
REF
OUT
INA181A1IDBVR
C17
0603, 0.1uF
C18
0603, 0.1uF
100V
R3
WSLP3921L2000FEA
R4
0603, 1K
R5
0603, 1K
CURR

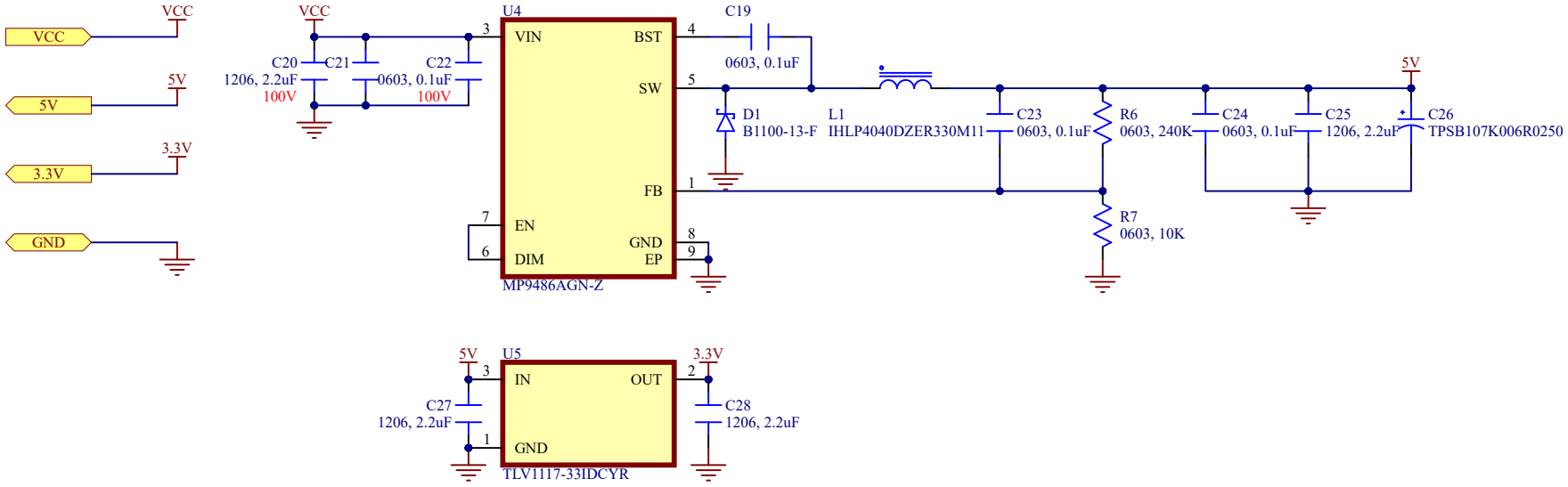
VCC
5V
3.3V
GND
VCC
C20
1206, 2.2uF
100V
C21
C22
0603, 0.1uF
100V
U4
VIN
BST
SW
FB
EN
DIM
GND
EP
MP9486AGN-Z
C19
0603, 0.1uF
D1
B1100-13-F
L1
IHLP4040DZER330M11
C23
0603, 0.1uF
R6
0603, 240K
R7
0603, 10K
C24
0603, 0.1uF
C25
1206, 2.2uF
C26
TPSB107K006R0250
5V
U5
IN
OUT
GND
TLV1117-33IDCYR
C27
1206, 2.2uF
C28
1206, 2.2uF
3.3V