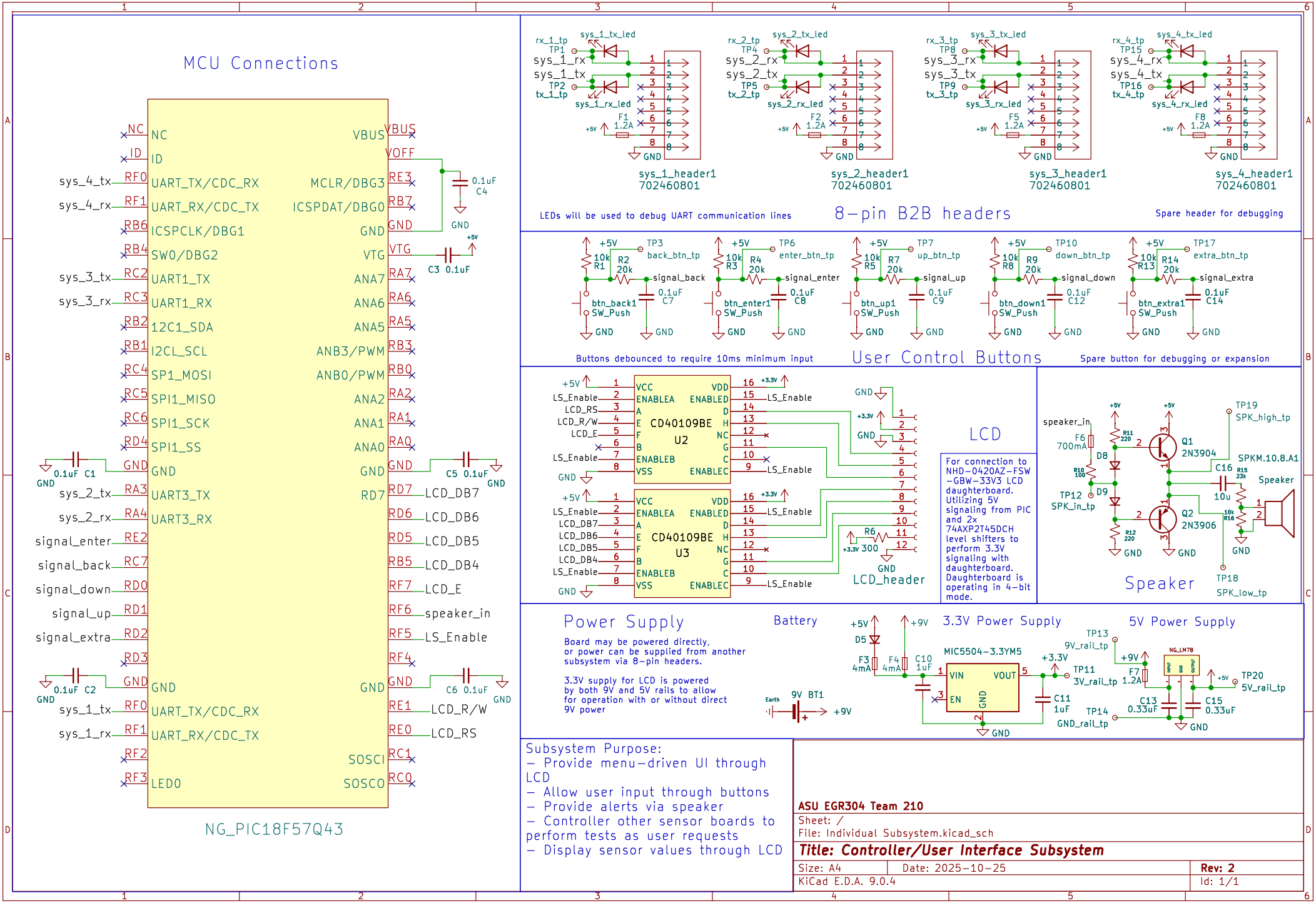
MCU Connections
NG_PIC18F57Q43
NC
ID
RF0 UART_TX/CDC_RX
RF1 UART_RX/CDC_TX
RB6 ICSPCLK/DBG1
RB4 SW0/DBG2
RC2 UART1_TX
RC3 UART1_RX
RB2 I2C1_SDA
RB1 I2CL_SCL
RC4 SP1_MOSI
RC5 SPI1_MISO
RC6 SPI1_SCK
RD4 SPI1_SS
GND
RA3 UART3_TX
RA4 UART3_RX
RE2
RC7
RD0
RD1
RD2
RD3
GND
RF0 UART_TX/CDC_RX
RF1 UART_RX/CDC_TX
RF2
RF3 LED0
VBUS
VOFF
MCLR/DBG3 RE3
ICSPDAT/DBG0 RB7
GND
VTG
ANA7 RA7
ANA6 RA6
ANA5 RA5
ANB3/PWM RB3
ANB0/PWM RB0
ANA2 RA2
ANA1 RA1
ANA0 RA0
GND
RD7 RD7 LCD_DB7
RD6 LCD_DB6
RD5 LCD_DB5
RB5 LCD_DB4
RF7 LCD_E
RF6 speaker_in
RF5 LS_Enable
RF4
GND
RE1 LCD_R/W
RE0 LCD_RS
SOSCI RC1
SOSCO RC0
sys_4_tx
sys_4_rx
sys_3_tx
sys_3_rx
sys_2_tx
sys_2_rx
signal_enter
signal_back
signal_down
signal_up
signal_extra
sys_1_tx
sys_1_rx
0.1uF C1
0.1uF C2
0.1uF C4
C3 0.1uF
C5 0.1uF
C6 0.1uF
GND
+5V
8-pin B2B headers
sys_1_header1 702460801
sys_2_header1 702460801
sys_3_header1 702460801
sys_4_header1 702460801
rx_1_tp TP1
sys_1_tx_led
sys_1_rx_led
tx_1_tp TP2
F1 1.2A
rx_2_tp TP4
sys_2_tx_led
sys_2_rx_led
tx_2_tp TP5
F2 1.2A
rx_3_tp TP8
sys_3_tx_led
sys_3_rx_led
tx_3_tp TP9
F5 1.2A
rx_4_tp TP15
sys_4_tx_led
sys_4_rx_led
tx_4_tp TP16
F8 1.2A
LEDs will be used to debug UART communication lines
Spare header for debugging
User Control Buttons
10k R1
R2 20k
TP3 back_btn_tp
signal_back
0.1uF C7
btn_back1 SW_Push
10k R3
R4 20k
TP6 enter_btn_tp
signal_enter
0.1uF C8
btn_enter1 SW_Push
10k R5
R7 20k
TP7 up_btn_tp
signal_up
0.1uF C9
btn_up1 SW_Push
10k R8
R9 20k
TP10 down_btn_tp
signal_down
0.1uF C12
btn_down1 SW_Push
10k R13
R14 20k
TP17 extra_btn_tp
signal_extra
0.1uF C14
btn_extra1 SW_Push
Buttons debounced to require 10ms minimum input
Spare button for debugging or expansion
CD40109BE U2
CD40109BE U3
VCC
ENABLEA
A
E
F
B
ENABLEB
VSS
VDD
ENABLED
D
H
NC
G
C
ENABLEC
+3.3V
LS_Enable
LCD_RS
LCD_R/W
LCD_E
LCD_DB7
LCD_DB6
LCD_DB5
LCD_DB4
R6 300
LCD_header
LCD
For connection to NHD-0420AZ-FSW-GBW-33V3 LCD daughterboard. Utilizing 5V signaling from PIC and 2x 74AXP2T45DCH level shifters to perform 3.3V signaling with daughterboard. Daughterboard is operating in 4-bit mode.
Speaker
speaker_in
F6 700mA
D8
D9
R10 100
TP12 SPK_in_tp
R11 220
R12 220
Q1 2N3904
Q2 2N3906
TP19 SPK_high_tp
SPKM.10.8.A1
C16 10u
R15 23k
10k R16
Speaker
TP18 SPK_low_tp
Power Supply
Board may be powered directly, or power can be supplied from another subsystem via 8-pin headers.
3.3V supply for LCD is powered by both 9V and 5V rails to allow for operation with or without direct 9V power
Battery
9V BT1
Earth
+9V
3.3V Power Supply
D5
F3 4mA
F4 4mA
C10 1uF
MIC5504-3.3YM5
VIN
EN
VOUT
GND
C11 1uF
TP11 3V_rail_tp
5V Power Supply
TP13 9V_rail_tp
F7 1.2A
NG_LM78
INPUT
GND
OUTPUT
TP20 5V_rail_tp
C13 0.33uF
C15 0.33uF
TP14 GND_rail_tp
Subsystem Purpose:
- Provide menu-driven UI through LCD
- Allow user input through buttons
- Provide alerts via speaker
- Controller other sensor boards to perform tests as user requests
- Display sensor values through LCD
ASU EGR304 Team 210
Sheet: /
File: Individual Subsystem.kicad_sch
Title: Controller/User Interface Subsystem
Size: A4
Date: 2025-10-25
Rev: 2
KiCad E.D.A. 9.0.4
Id: 1/1