FieldBee
precision for every farmer

Datasheet

FieldBee PowerSteer

Intro to the system

The FieldBee PowerSteer is an affordable retrofit RTK autosteer system which allows farmers a hands-free experience while driving on the field.
It is a smartphone-based system with few components and is designed first and foremost for fast installation, easy and automatic calibration and ease of use.
The system will fit most tractors in a manner that doesn't interfere with the tractor's internal steering systems. It allows a full range of driving speeds and most terrains at a high degree of accuracy.

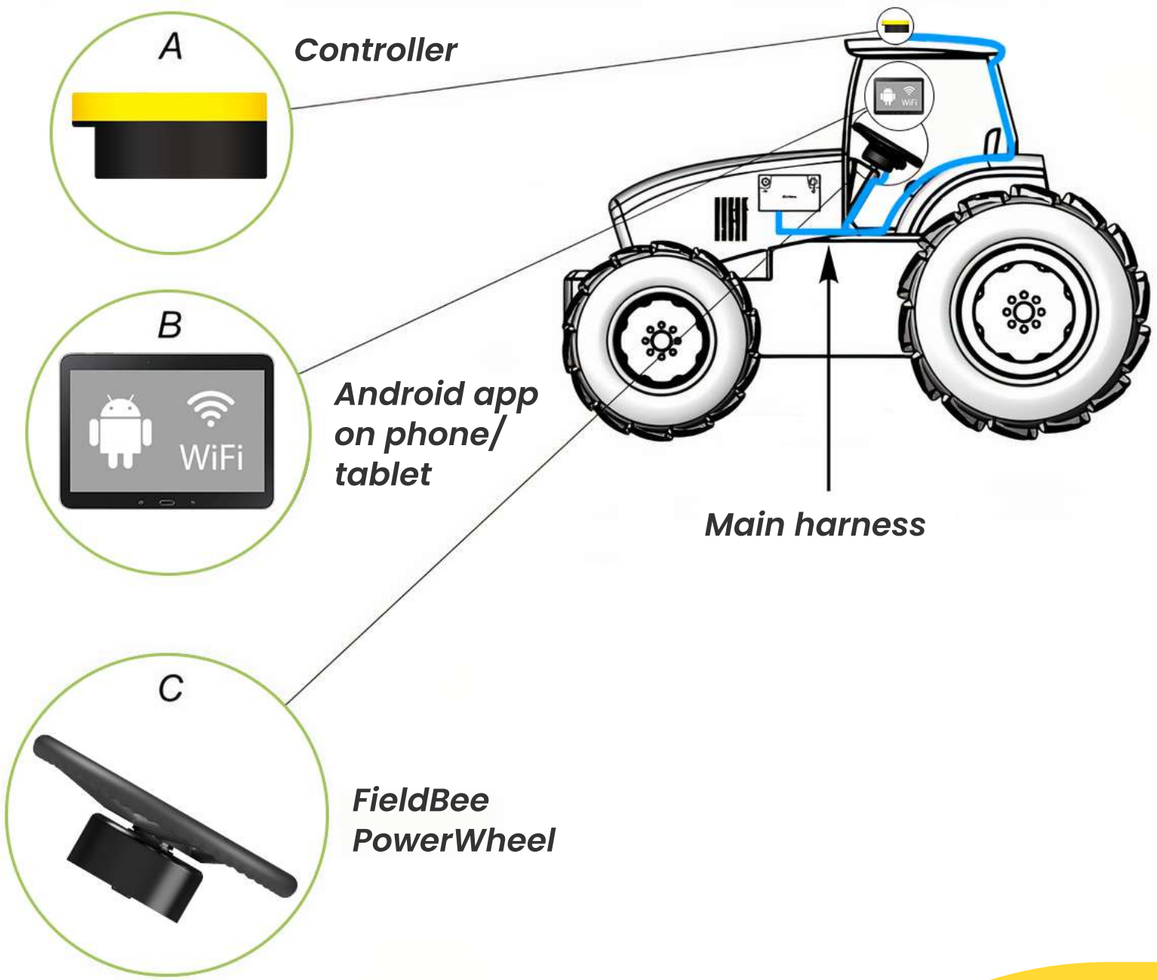

System Features

- ±2,5cm accuracy when receiving RTK correction signal.
- Dual-channel GNSS receiver, working with multiple satellite constellations and most NTRIP RTK correction networks.
- Allows working with almost any Android smartphone or tablet and synchronizes information with the FieldBee web app on the farmer's computer.
- Can be easily switched between tractors, without the need to re-calibrate each time.
- Has built-in terrain compensation.
- Multiple navigation patterns in the app.
- Automatic record-keeping from field operations.
- (Optional). Ultra Low-speed operation less than 1km/h. Required double receiver and wheel angle sensor.

FieldBee PowerSteer Controller-Receiver

The Integrated RTK receiver and steering controller is a high-precision electronic controller that provides automatic steering capability to the vehicle.
It receives guidance information from the Android app on the phone/tablet and sends steering commands to the vehicle.
The controller is compatible with the FieldBee app on Android devices. It can be installed easily on the majority of agricultural vehicle brands and models.
The controller includes an L2 GNSS RTK receiver and a tilt/ roll sensor in one, durable, water and dust-tight enclosure.

FieldBee Navigation App

1. Can be used on almost any Android phone or tablet. Can also be used on FieldBee's rugged 7'' certified tablet for extra reliability due to fewer 3rd party system updates and dedicated testing.
2. Drive in straight, curve, headland and saved patterns with high precision.
3. Map your fields and obstacles.
4. Automatically capture field records while driving.
5. Get reports about fieldwork in Excel and PDF formats.
6. Planning and reporting are also available in the FieldBee web app for use in the office.
7. Holds multiple vehicles and implements profiles for easy hardware switching between vehicles without re-callibration.

FieldBee PowerWheel

Unit which replaces the original steering wheel with a steering wheel unit with an electric motor for automatic steering. Consists of 4 main parts:

1. Steering wheel

Replaceable steering wheel specially designed for tractors. Easy to install and switch between different machines.

2. High torque steering wheel actuator

The motor has a high torque value and a fittable shaft adapter for installation on many tractor models. Motor has minimum mechanical parts with minimum noise level thanks to the use of Direct Drive technology. These two features allow the FieldBee PowerWheel to be compatible with most tractor models. For details see the tech specs.

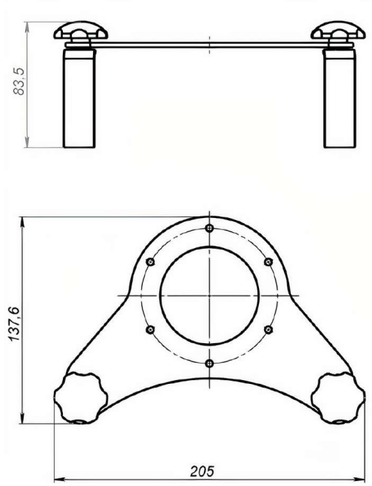

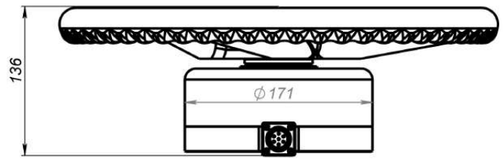

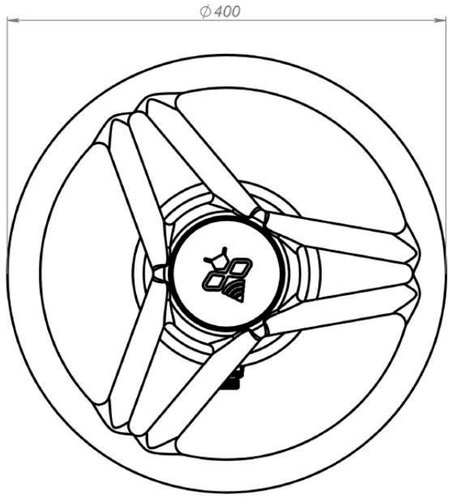

3. Anti-rotation bracket

Part which fixates the PowerWheel to the steering wheel shaft of the tractor. The PowerWheel connects to the anti-rotation bracket with a dedicated pin.

4. Steering wheel shaft adapter

Specific adapter that depends on a tractor model. This adaptor helps to fit the FieldBee PowerWheel onto the steering column.

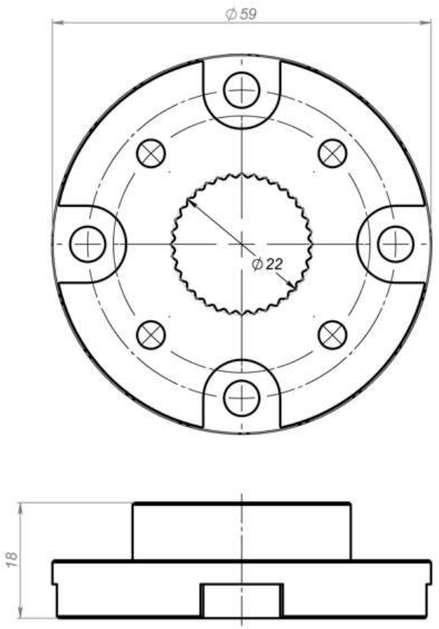

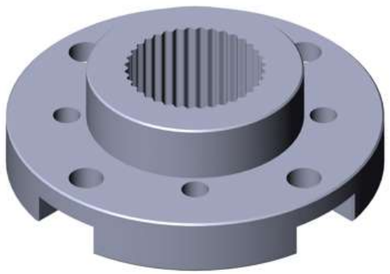

Connection diagram

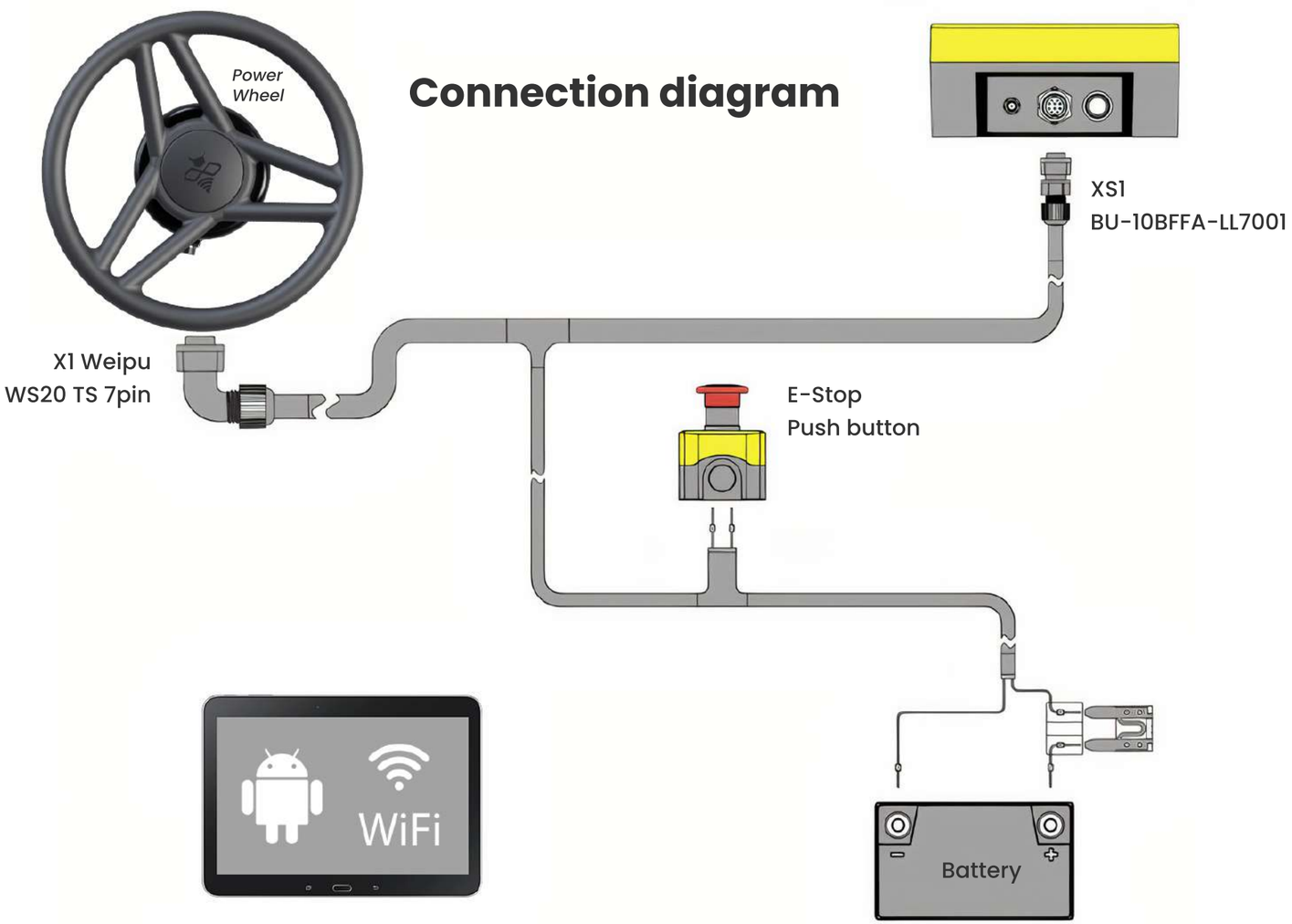

1 Harness only. Approx. Installation time: 15-30 mins.

Specifications

Accuracy

- ±2.5 cm when receiving RTK correction signal
- Minimum speed 0,5 km/h with normal kit
- Rotary minimal torque value 7 Nm
- Compatible with FieldBee app on Android devices

GNSS Receiver

- GPS L1C/A L2C, GLO L1OF L2OF, GAL E1B/C E5b, BDS B1I B2I, QZSS L1C/A L2C
- RTK 0.01 m + 1 ppm CEP
- Tilt compensation in range +/-15 deg accuracy 1 deg
- Multi-band RTK with fast convergence times and reliable performance
- Wireless interfaces LoRa 868 MHz /WiFi

Communication:

CAN	1xISO11898-1 compatible port (internal communication)
WiFi	
Protocols	RestFul, Socket
RS232	NMEA 0183, CANopen Additional RS232 port with NMEA output for connecting to 3rd Party devices

Dimensions:

- Steering Controller ⌀150mm x 75mm
- Steering wheel actuator ⌀171mm x 65mm
- Steering wheel ⌀400mm x 50mm

Connectors:

12-pin Male (power, CAN, RS232), 12-pin Male (CAN)

Power

Supply Voltage 7 - 32V DC
Consumption 10-15A
Rated torque power 7-16 N.m
Rated speed 80-100 rpm

Environmental & Compliance

PowerSteer - IP-55, operating Temperature -25°C to 55°C
Controller - IP-67, operating Temperature -20°C to 85°C 140°F), RoHS, CE, ISO 15003
Tablet - IP-65, when used with supplied dock.

Tractor Compatibility

- System fits front-wheel steer tractors only.
- System can be used in open-cabin tractors.