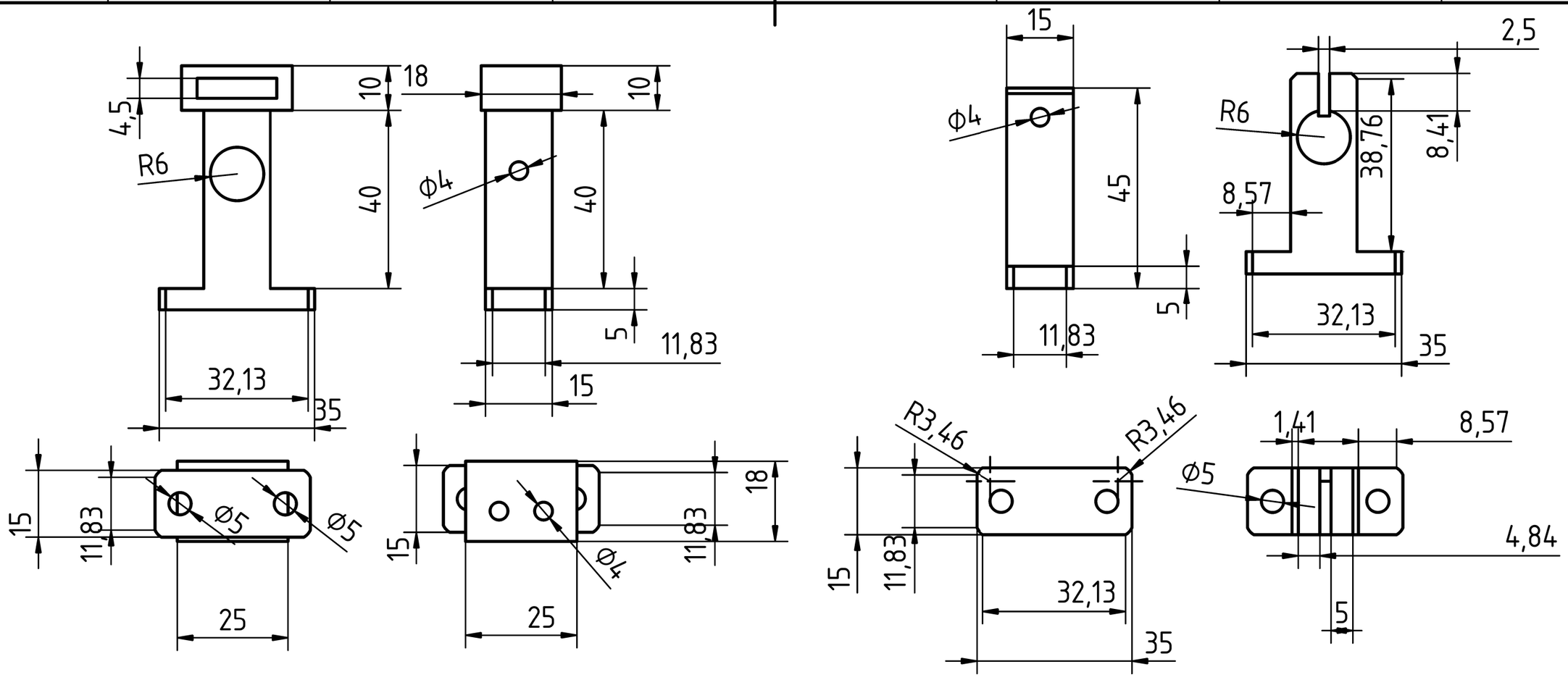

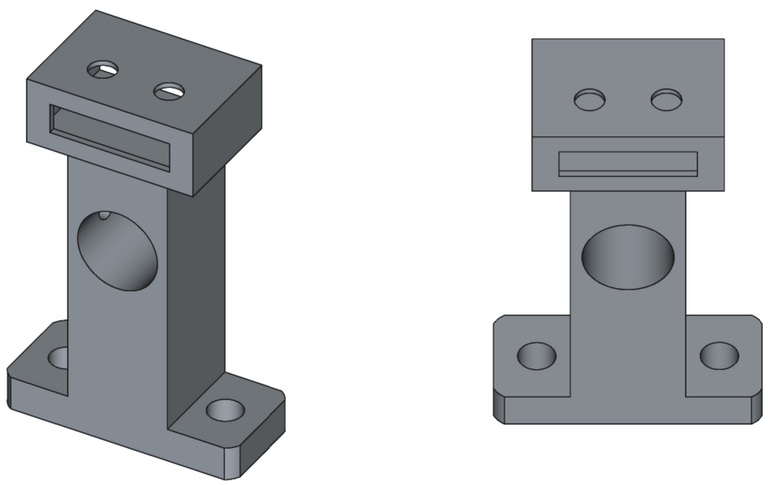

Part Material:
PLA

General tolerances:
ISO 2768-m

Scale:
1 : 1

Title: Soportes Varillas	Created by: Paglia Tiziano Nehuen		Owner: SISMA	
Document type: Plano Diseño	Approved by: -			
Drawing number: 01	Language: ES	Issue date: 20/10/2025	Revision: AAA	Sheet: 1 / 1

A3