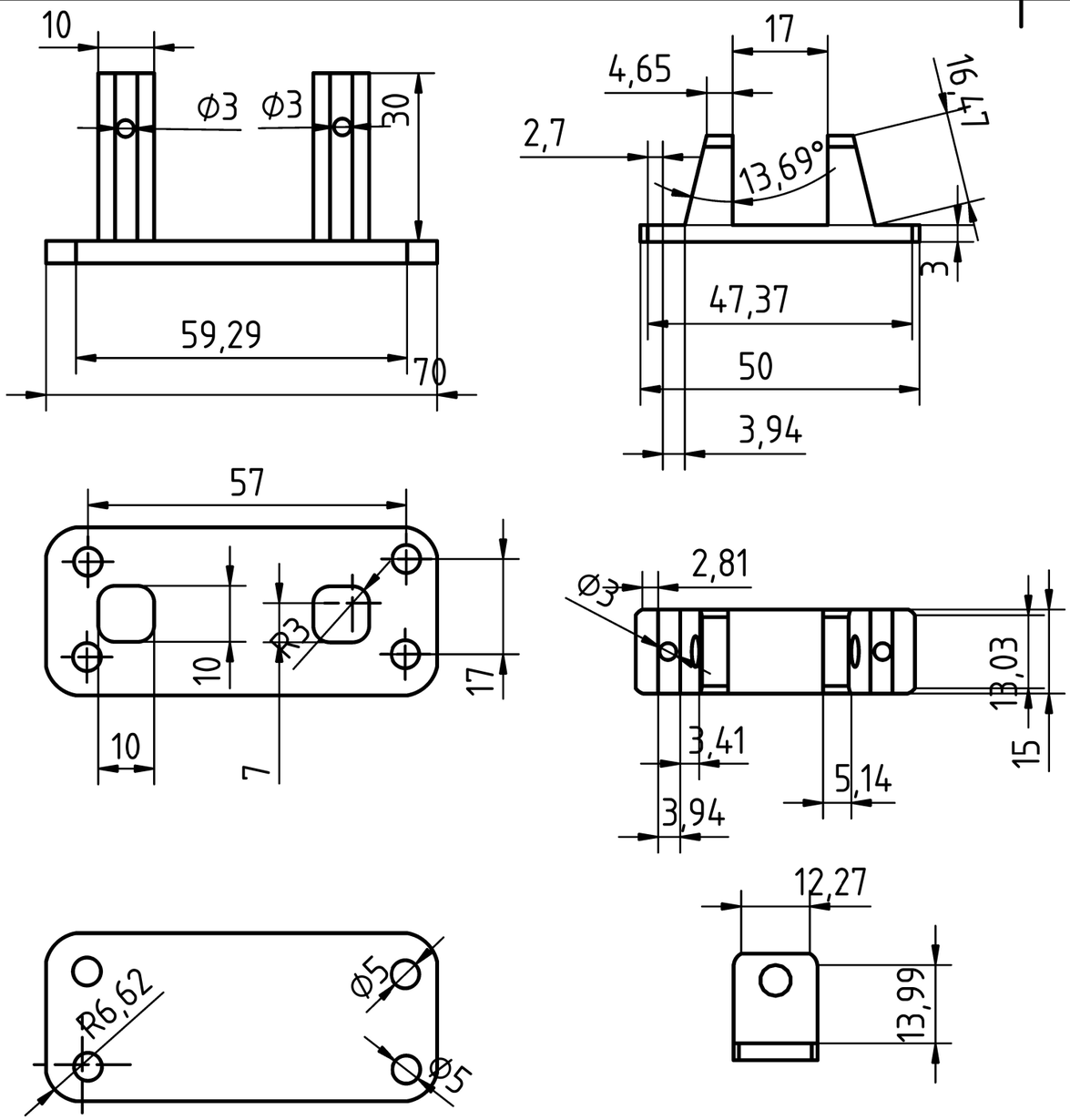

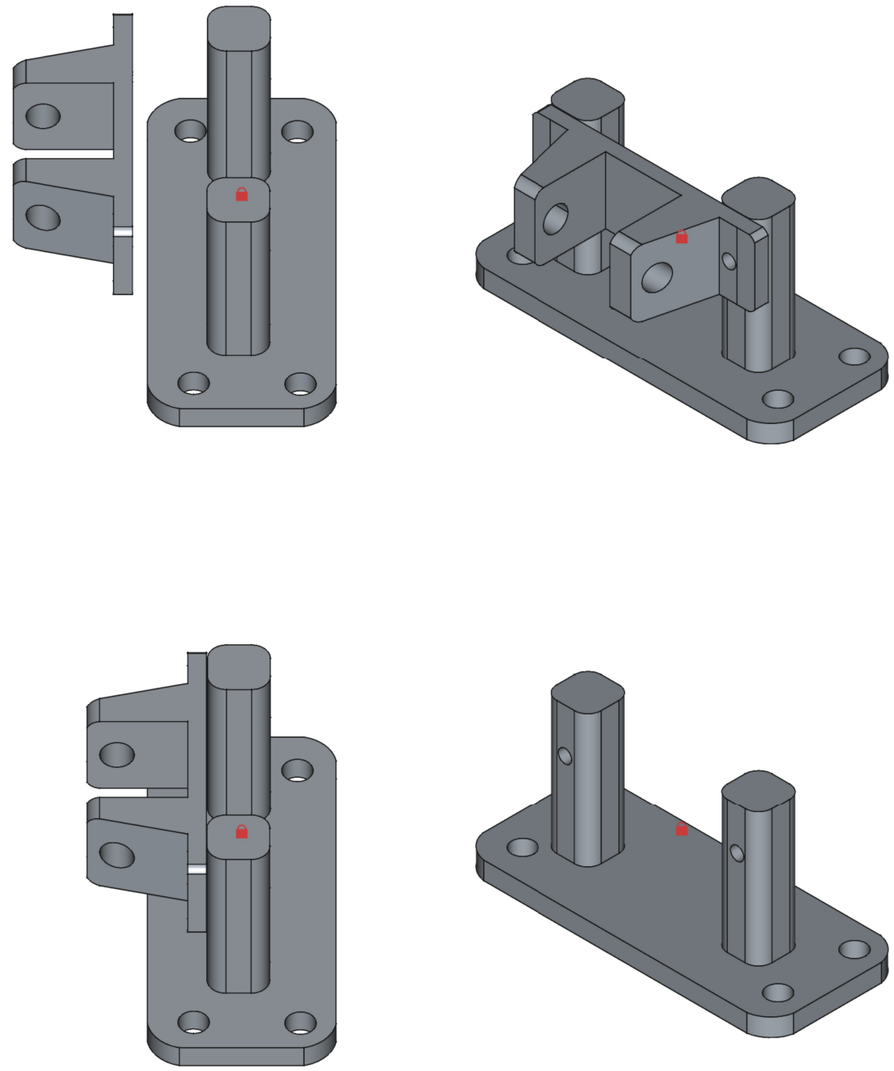

Part Material: PLA	General tolerances: ISO 2768-m		Scale: 1 : 1		
Title: Soporte polea 2	Created by: Paglia Tiziano Nehuen			Owner:	
Document type: Plano Diseño	Approved by: –				
Drawing number: 01	Language: ES	Issue date: 20/10/2025		Revision: AAA	Sheet: 1 / 1

A3