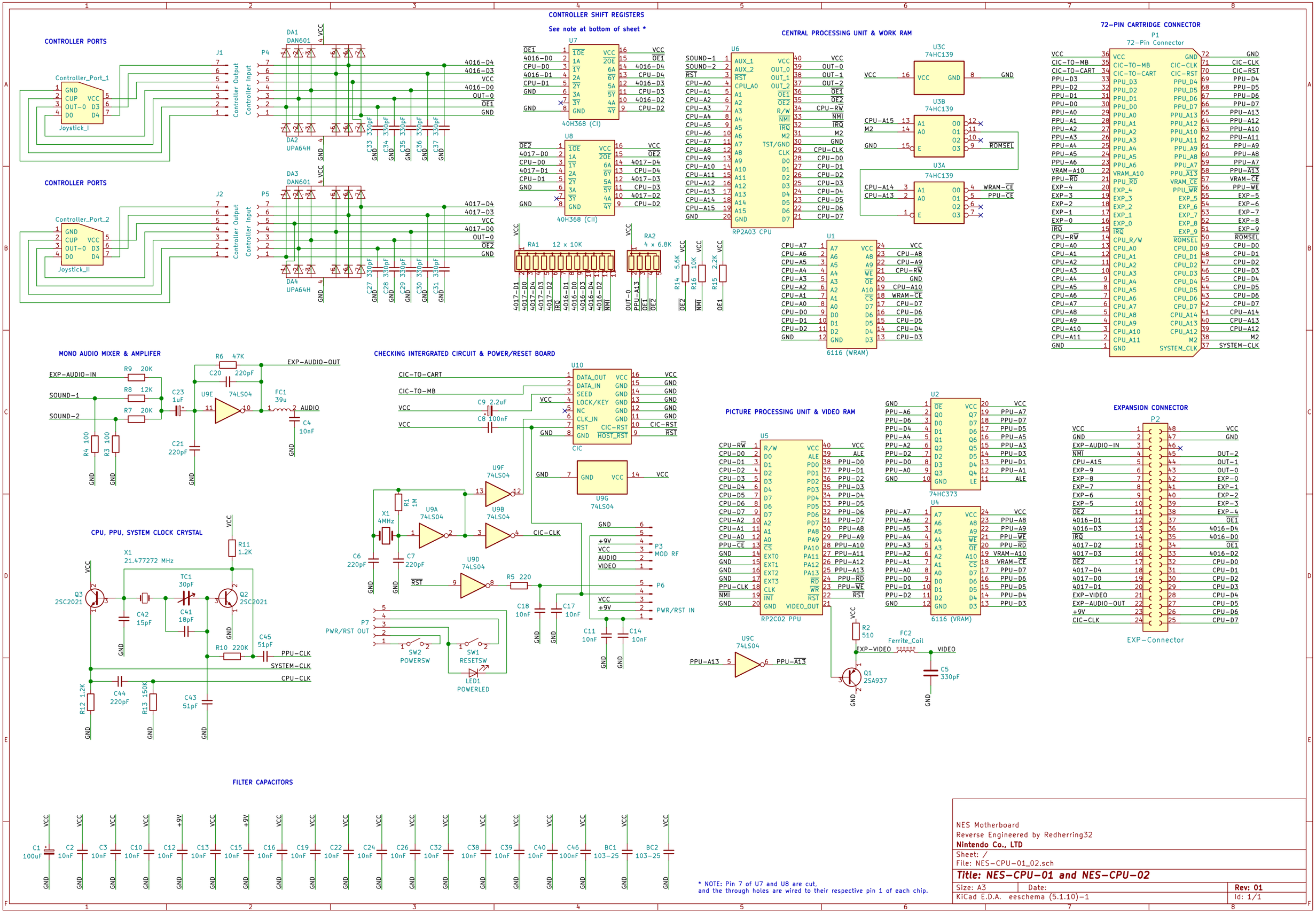
CONTROLLER PORTS
CONTROLLER SHIFT REGISTERS
See note at bottom of sheet *
CENTRAL PROCESSING UNIT & WORK RAM
72-PIN CARTRIDGE CONNECTOR
MONO AUDIO MIXER & AMPLIFER
CHECKING INTERGRATED CIRCUIT & POWER/RESET BOARD
PICTURE PROCESSING UNIT & VIDEO RAM
EXPANSION CONNECTOR
CPU, PPU, SYSTEM CLOCK CRYSTAL
FILTER CAPACITORS
* NOTE: Pin 7 of U7 and U8 are cut,
and the through holes are wired to their respective pin 1 of each chip.
NES Motherboard
Reverse Engineered by Redherring32
Nintendo Co., LTD
Sheet: /
File: NES-CPU-01_02.sch
Title: NES-CPU-01 and NES-CPU-02
Size: A3
Date:
Rev: 01
KiCad E.D.A. eeschema (5.1.10)-1
Id: 1/1