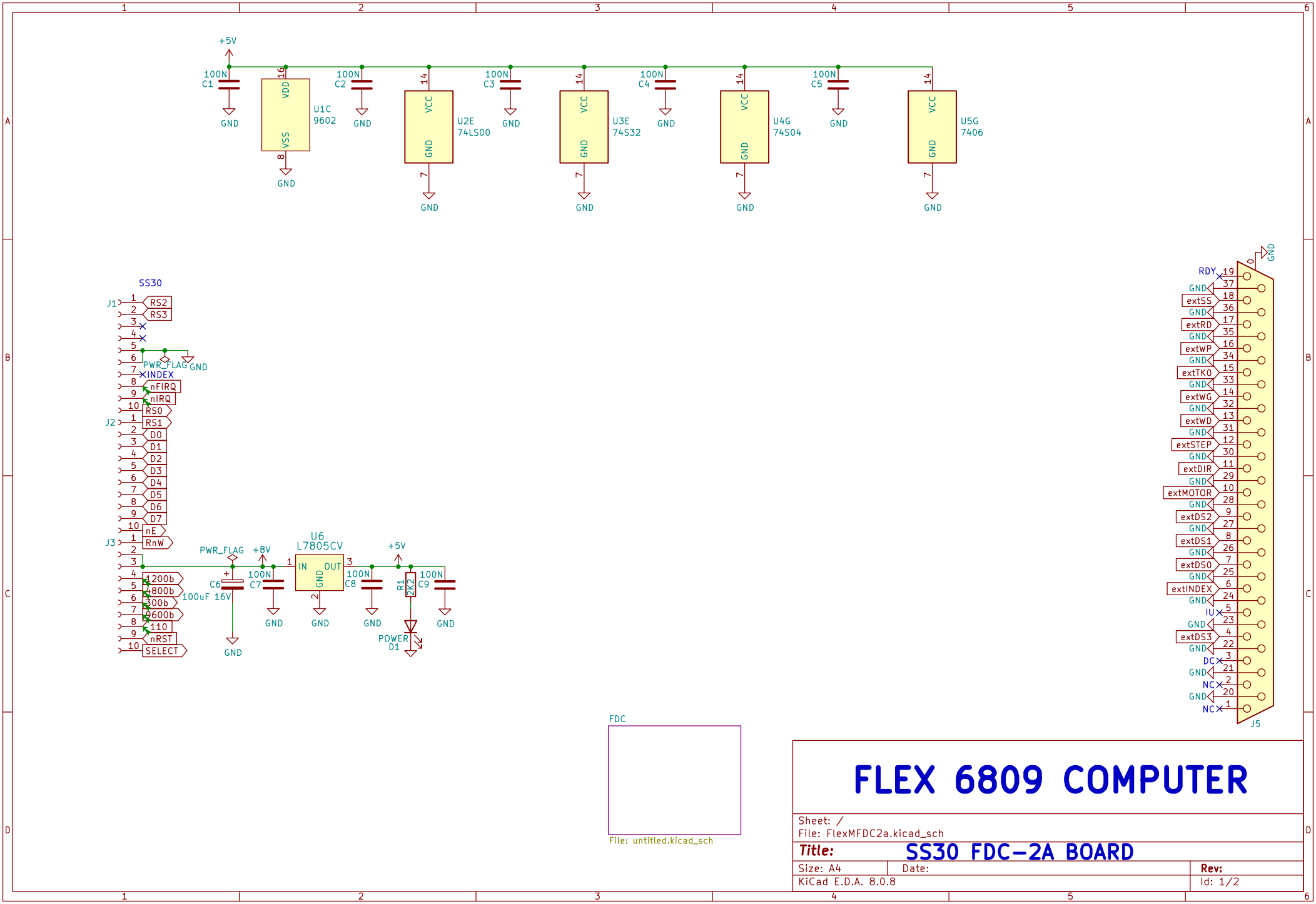


# FLEX 6809 COMPUTER

Sheet: /
File: FlexMFDC2a.kicad_sch

**Title:** SS30 FDC-2A BOARD

| | | |
|---|---|---|
| Size: A4 | Date: | Rev: |
| KiCad E.D.A. 8.0.8 | | Id: 1/2 |

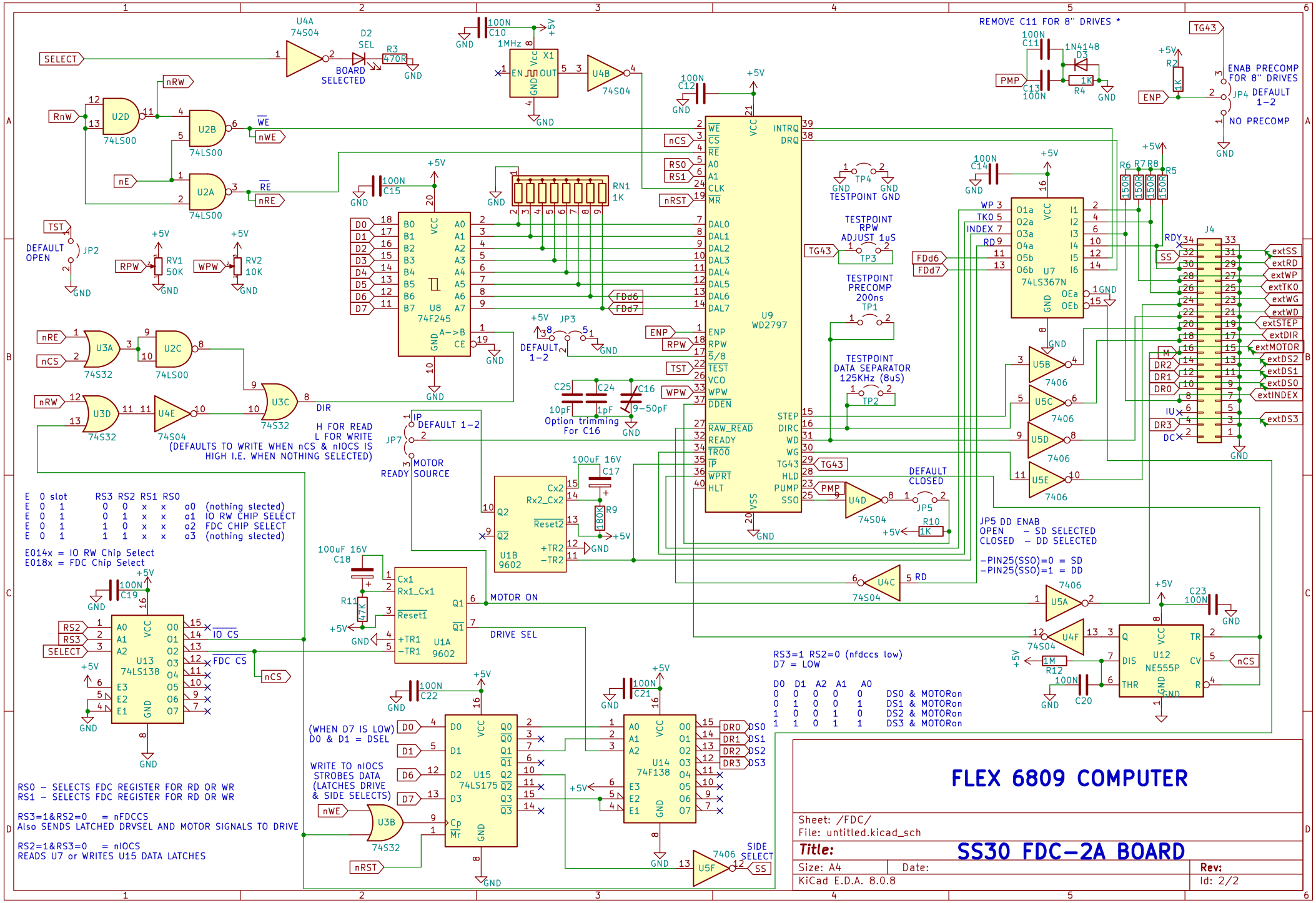
FLEX 6809 COMPUTER
SS30 FDC-2A BOARD
Sheet: /FDC/
File: untitled.kicad_sch
Title:
Size: A4
Date:
Rev:
KiCad E.D.A. 8.0.8
Id: 2/2
U9 WD2797
U8 74F245
U7 74LS367N
U12 NE555P
U13 74LS138
U14 74F138
U15 74LS175
U1A 9602
U1B 9602
J4
REMOVE C11 FOR 8" DRIVES *
ENAB PRECOMP FOR 8" DRIVES
JP4 DEFAULT 1-2
NO PRECOMP
TESTPOINT GND
TESTPOINT RPW ADJUST 1uS
TESTPOINT PRECOMP 200ns
TESTPOINT DATA SEPARATOR 125KHz (8uS)
DEFAULT CLOSED
JP5 DD ENAB
OPEN - SD SELECTED
CLOSED - DD SELECTED
-PIN25(SSO)=0 = SD
-PIN25(SSO)=1 = DD
H FOR READ
L FOR WRITE
(DEFAULTS TO WRITE WHEN nCS & nIOCS IS HIGH I.E. WHEN NOTHING SELECTED)
DEFAULT 1-2
MOTOR READY SOURCE
Option trimming For C16
MOTOR ON
DRIVE SEL
SIDE SELECT
E 0 slot RS3 RS2 RS1 RS0
E 0 1 0 0 x x o0 (nothing slected)
E 0 1 0 1 x x o1 IO RW CHIP SELECT
E 0 1 1 0 x x o2 FDC CHIP SELECT
E 0 1 1 1 x x o3 (nothing slected)
E014x = IO RW Chip Select
E018x = FDC Chip Select
RS0 - SELECTS FDC REGISTER FOR RD OR WR
RS1 - SELECTS FDC REGISTER FOR RD OR WR
RS3=1&RS2=0 = nFDCCS
Also SENDS LATCHED DRVSEL AND MOTOR SIGNALS TO DRIVE
RS2=1&RS3=0 = nIOCS
READS U7 or WRITES U15 DATA LATCHES
(WHEN D7 IS LOW) D0 & D1 = DSEL
WRITE TO nIOCS STROBES DATA (LATCHES DRIVE & SIDE SELECTS)
RS3=1 RS2=0 (nfdccs low)
D7 = LOW
D0 D1 A2 A1 A0
0 0 0 0 0 DS0 & MOTORon
0 1 0 0 1 DS1 & MOTORon
1 0 0 1 0 DS2 & MOTORon
1 1 0 1 1 DS3 & MOTORon