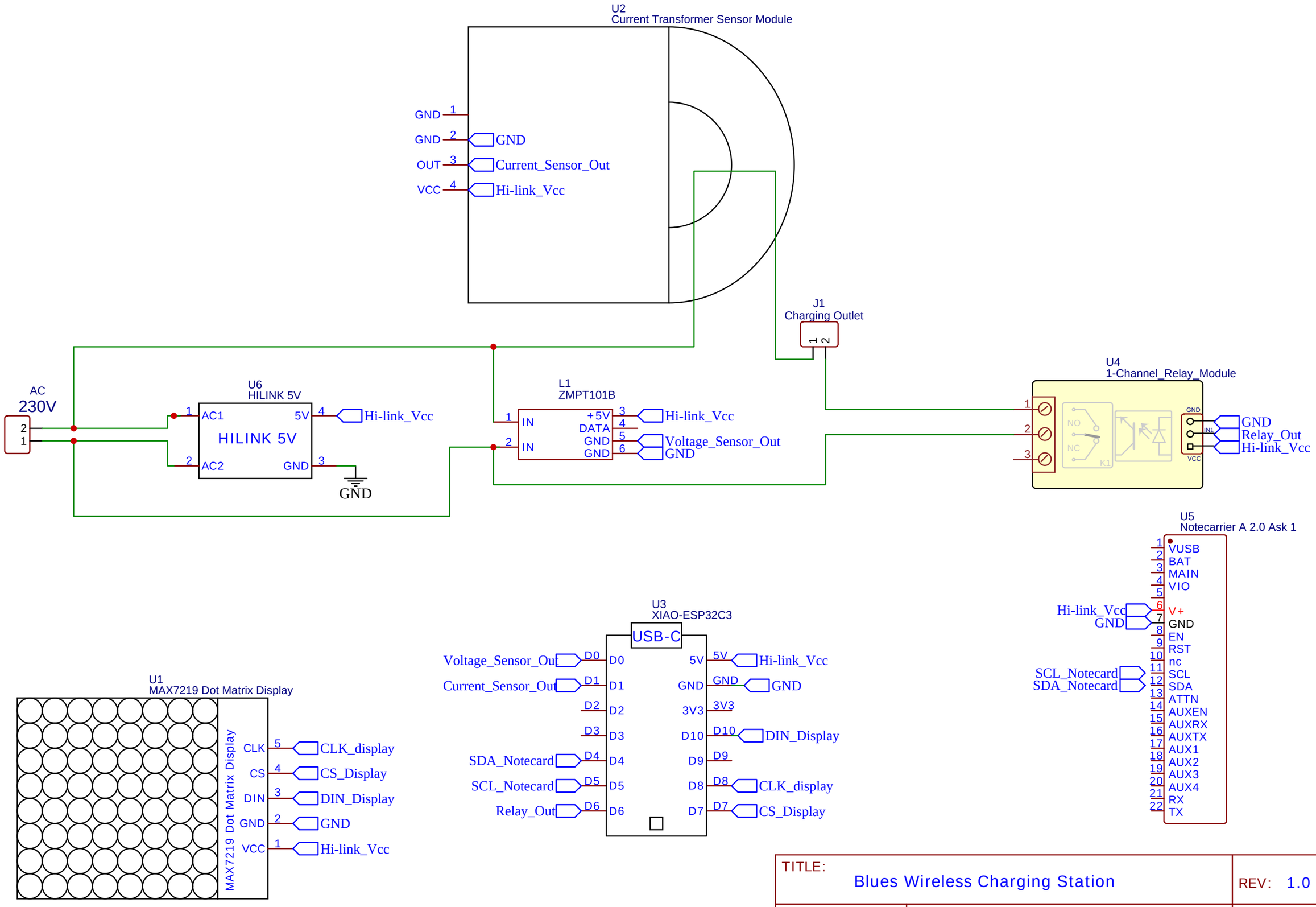

TITLE: Blues Wireless Charging Station		REV: 1.0
EasyEDA	Company: Your Company	Sheet: 1/1
	Date: 2024-03-17 Drawn By: nekhil07	