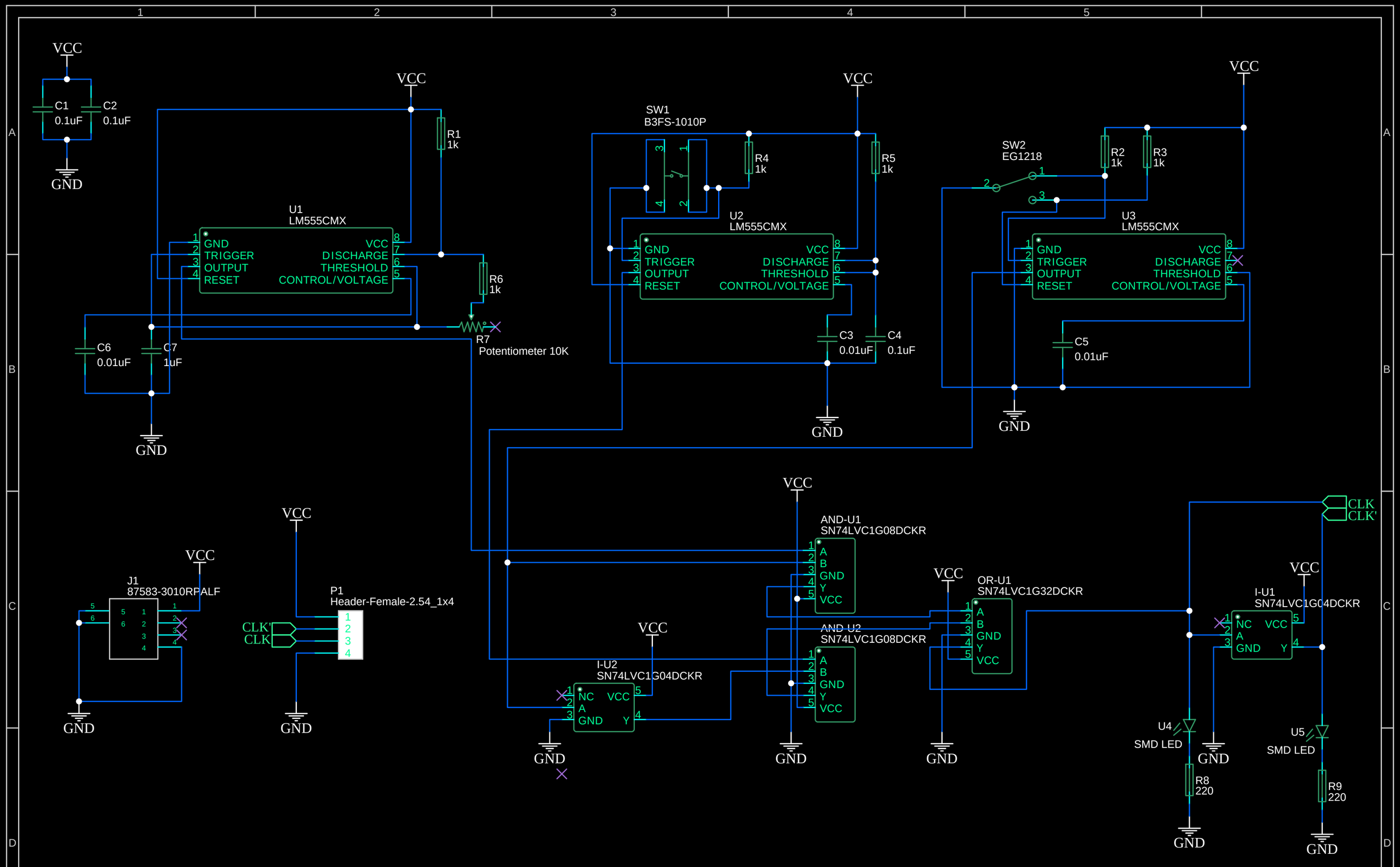

TITLE: CLOCK	REV: 1.0
Company:	Sheet: 1/1
Date: 2020-04-24 Drawn By: nekros0day	