Temporal Derivative Soft-Sensing and Reconstructing Solar Radiation and Heat Flux from Common Environmental Sensors

Neksha DeSilva
Independent Researcher
FIA Operating Systems
Colombo, Sri Lanka
n.desilva@fiaos.org

***Abstract*—Current environmental monitoring is limited by a reliance on static snapshot readings, such as temperature, pressure, and humidity, often failing to capture the dynamic energy exchanges that drive these conditions. This paper introduces Differential Temporal Derivative Soft-Sensing (DTDSS), a physics-based framework that enables standard, low-cost environmental sensors to estimate radiative energy transfer. By utilizing a paired-sensor architecture coupled with a novel signal processing technique, Inertial Noise Reduction (INR), the system mathematically reconstructs Global Horizontal Irradiance (GHI) and convective heat flux. Field validation, benchmarked against calibrated Class A reference pyranometers provided by the Department of Meteorology, Sri Lanka, demonstrates a correlation of $R^2 > 0.9$ (RMSE $\approx$ 45 W/m^2), achieved on an 8-bit microcontroller with a footprint of less than 2KB RAM. This approach allows standard embedded electronics to surpass simple scalar readings and resolve complex energy flows, offering a thermodynamically robust alternative to optical sensing for precision engineering and automated energy management.**

***Index Terms*—Soft-sensing, Embedded Systems, IoT, Solar Irradiance, Heat Flux, Signal Processing**

I. Introduction

Environmental monitoring through common sensors (e.g., Bosch BME280) is conventionally limited to static variables: temperature, pressure, and humidity [1]. While these sensors provide instantaneous state data, they remain unresponsive to dynamic energy exchanges. Specifically, commercial IoT nodes rarely measure:

- **Global Horizontal Irradiance (GHI)**: Solar energy reaching the ground per unit area.
- **Heat Flux**: The rate of thermal energy transfer through the environment.

These metrics are essential for practical applications. Solar radiation serves as the primary energy input for Earth's climate and is required for calculating evapotranspiration in agriculture [2].

In the development of low-cost distributed sensing networks, initial experiments utilizing Thermoelectric Generator (TEG) modules to implement the Penman-Monteith equation proved unsuccessful. Experimental results indicated that the ceramic construction of standard TEGs exhibited excessive thermal inertia, retaining heat rather than providing the responsive data required for real-time flux estimation.

To address this, a cohesive, integrated approach was developed using the Bosch BME280 as a baseline foundation. Its accuracy in measuring three physically connected parameters—Relative Humidity, Temperature, and Pressure—provides the stability needed for an accumulative sensing package. Notably, the measurement of absolute barometric pressure allows for the direct derivation of air density, avoiding altitude-derived estimation errors common in standard atmosphere models.

A. Limitations of Current Instrumentation

Solar radiation measurement traditionally requires thermopile pyranometers governed by ISO 9060 standards [3] or semiconductor photodiodes. While photodiodes are inexpensive, they suffer from inherent long-term deployment challenges.

First, polymer lenses and optical epoxies degrade under prolonged UV exposure, altering spectral transmission properties. Second, optical sensors are highly susceptible to fouling; dust accumulation or biofilm growth causes immediate signal attenuation. Conversely, a thermodynamic approach measures total energy absorption rather than photon flux. A blackened thermal absorber continues to function effectively even with minor surface contamination, as it measures the heat generated by incident energy. This offers a distinct advantage in remote deployments where regular cleaning is impossible.

B. Challenges in Edge-Based Soft-Sensing

Current soft-sensing approaches typically rely on machine learning (ML). While recent studies have successfully employed LSTM and XGBoost for irradiance forecasting [4], these models typically require significant memory overhead. This approach presents specific challenges for embedded devices:

1) **Resource Constraints:** As noted by Ray et al. [5], the deployment of inference models on edge devices faces strict energy and memory boundaries, necessitating algorithmic efficiency over raw model complexity.

2) **Generalization:** Neural networks trained in specific climates often fail to generalize to new environments without retraining.
3) **Dynamics:** Standard ML models often map instantaneous inputs to outputs, ignoring the crucial temporal dynamics of how a sensor heats up over time.

Radiation changes on timescales of seconds (cloud movement), while temperature changes on timescales of minutes. This temporal mismatch introduces significant error in static mapping models.

C. The Differential Thermodynamic Approach

To resolve these limitations, Differential Temporal Derivative Soft-Sensing (DTDSS) is proposed. A fundamental thermodynamic principle states that a single sensor cannot simultaneously achieve thermal equality with air (for temperature/humidity measurement) and thermal disequilibrium with solar radiation (for radiation measurement). Sensing must therefore be partitioned into two separate thermodynamic nodes [7].

This aligns with recent frameworks in "Physics-Enhanced TinyML" [6], demonstrating that integrating domain knowledge (thermodynamics) with sensing algorithms significantly outperforms purely data-driven black-box models in unpredictable environments.

Two identical sensors (e.g., BME280) are placed in close proximity but in contrasting enclosures:

- **Reference node** (S_{ref}): Housed in a ventilated, reflective shield, maintaining thermal equilibrium with ambient air.
- **Flux node** (S_{flux}): Housed in a sealed, absorptive black-body enclosure, acting as an energy trap.

By analyzing real-time variation between these nodes—specifically the temporal derivative of their temperature difference—incident radiation can be mathematically reconstructed without optical components.

D. System Architecture

The pipeline sequentially executes: 1) Pressure-to-density calculation, 2) Differential temperature calculation, 3) INR filtering, and 4) Final flux reconstruction. This sequential integration is illustrated in Fig. 1.

The differential system comprises two processing paths:

Reference Path (Baseline): Operates on the vented sensor. Psychrometric relationships and empirical meteorology establish accurate baseline conditions. True ambient temperature (T_{ref}), relative humidity, and pressure readings are provided uncontaminated by solar heating. The Reference Path provides stability and ensures the system has accurate environmental context, preventing the "dry kiln" error. This common failure occurs when an enclosed sensor reports artificially low humidity due to localized self-heating, a bias that DTDSS cancels through its differential topology.

Reactive Path (Flux): Operates on the black-body sensor. The temporal derivative of temperature difference is used to detect and quantify radiative energy input, capturing transient events like cloud breaks.

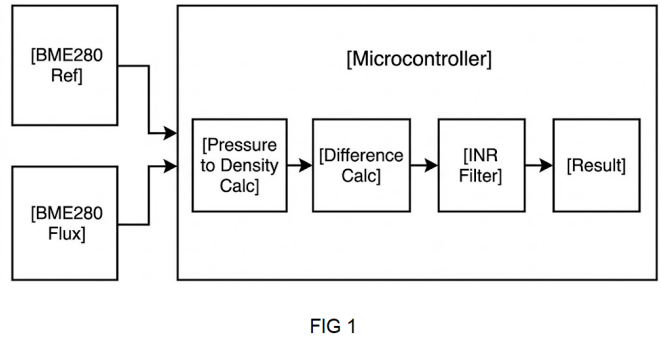

Fig. 1. Signal processing pipeline showing the sequential integration of real-time air density calculation and Inertial Noise Reduction (INR).

Central to the Reactive Path is Inertial Noise Reduction (INR), a signal processing technique designed for sensor thermodynamics, addressing complications arising from differentiating noisy signals.

Using the BME280's pressure sensor for real-time air density calculation, the system becomes altitude-independent—deployable from sea level to 4000+ meters without modification.

II. The Differential Architecture

The central challenge is distinguishing between a hot day (high ambient temperature) and a sunny day (high radiative flux). A single sensor cannot separate these signals. The differential system resolves this by processing two concurrent telemetry streams from physically distinct sensor nodes.

TABLE I
Comparison of Differential Pipeline Characteristics

Feature	Reference Path	Reactive Path
Time Scale	Minutes to Hours	Seconds
Physics Model	Equilibrium Thermodynamics	Non-Equilibrium
Primary Equation	Kasten-Czeplak	Newton's Law (Inverted)
Noise Sensitivity	Low (Heavy Filtering)	High (Requires INR)
Failure Mode	Slow reaction	Sensitive to sensor noise

III. Thermodynamics of Humid Air

The sensor operates immersed in the lower atmosphere; atmospheric properties govern heat transfer between sensor and environment. Engineering models often treat air as a simple ideal gas with constant properties, or assume standard atmosphere conditions. For a flux model intended for global deployment, these simplifications introduce unpredictable outputs.

DTDSS rejects static assumptions in favor of dynamic, first-principles derivation of air properties from measured state variables: pressure (P), temperature (T), and relative humidity (RH).

A. Air Density

Air density (ρ) governs convective heat transfer [8]. When the sensor is warmer than surrounding air, heat flows via convection at a rate dependent on fluid density.

At sea level, $\rho \approx 1.225$ kg/m^3; at 2000m, $\rho \approx 1.00$ kg/m^3; at 4000m, $\rho \approx 0.82$ kg/m^3. If sea-level density is assumed at 4000m, convective cooling is overestimated by approximately 50%, causing proportional underestimation of solar radiation.

The BME280 provides total atmospheric pressure P, directly related to altitude. Actual air density is calculated without GPS or altitude lookup tables.

B. Ideal Gas Law for Moist Air

The atmosphere is a mixture of dry air and water vapor with different molecular weights and gas constants. By Dalton's Law of Partial Pressures:

$$P = P_d + e \tag{1}$$

where P_d is dry air partial pressure and e is water vapor partial pressure. Moist air density:

$$\rho_{moist} = \frac{P - e}{R_d T} + \frac{e}{R_v T} \tag{2}$$

where $R_d = 287.058$ J·kg^{-1}·K^{-1} (dry air) and $R_v = 461.495$ J·kg^{-1}·K^{-1} (water vapor). Defining $\epsilon = R_d/R_v \approx 0.622$:

$$\rho_{moist} = \frac{P}{R_d T}\left(1 - \frac{e}{P}(1-\epsilon)\right) \tag{3}$$

Humid air is less dense than dry air at constant temperature and pressure due to the lower molecular weight of water vapor (18 g/mol) compared to dry air (≈ 29 g/mol). For soft sensing, this means humid air is less efficient at carrying heat away from the sensor.

By calculating ρ_{moist} dynamically at every timestep, the soft sensor recalibrates its thermal model for exact altitude and humidity conditions—a direct rejection of the "standard atmosphere" constraint.

C. Vapor Pressure Derivation

Water vapor partial pressure e is derived from relative humidity and saturation vapor pressure [9]:

$$e = e_s(T) \cdot \frac{RH}{100} \tag{4}$$

Saturation vapor pressure approximation:

$$e_s(T) = 6.112 \cdot \exp\left(\frac{17.67 \cdot (T - 273.15)}{T - 29.65}\right) \tag{5}$$

where T is in Kelvin and e_s in hPa. This equation is robust for -40°C to +50°C ranges.

D. Specific Enthalpy of Moist Air

Enthalpy represents total energy content—sensible heat (thermometer measurement) and latent heat (energy stored in water vapor phase). Specific enthalpy per unit mass of dry air:

$$h = h_a + x \cdot h_v \tag{6}$$

where $x = 0.622\frac{e}{P-e}$ is the humidity mixing ratio. Individual enthalpy terms:

$$h_a \approx 1.006\,t \text{ (kJ/kg)} \tag{7}$$

$$h_v \approx 2501 + 1.86\,t \text{ (kJ/kg)} \tag{8}$$

The value 2501 kJ/kg represents latent heat of vaporization at 0°C. The total specific enthalpy:

$$h = 1.006\,t + x(2501 + 1.86\,t) \tag{9}$$

The Reference Path tracks enthalpy changes to distinguish between Advective heating (warm, humid air moving in) and Radiative heating (sunlight hitting the sensor).

To illustrate the necessity of the enthalpy model, consider two states:

- **State A:** Temperature rises from 20°C to 25°C with constant 50% humidity.
- **State B:** Temperature rises from 20°C to 25°C, but humidity increases from 40% to 70%.

A standard scalar temperature model treats these as identical. However, State B represents a significantly higher change in total environmental energy due to the latent heat carried by the additional water vapor. To put the scale of this energy reservoir in perspective, evaporating a single gram of water requires as much energy as heating that same gram by 2501°C, were such heating possible in the liquid phase. The DTDSS framework identifies this distinction through the Reference Path, distinguishing advective weather fronts from true radiative events.

E. Convective Heat Transfer Coefficient

The convective heat transfer coefficient h_c dictates heat flux rate:

$$q_{conv} = h_c(T_s - T_\infty) \tag{10}$$

For small objects like BME280 packages (approximately 2.5mm × 2.5mm × 0.9g), flow is typically laminar at low wind speeds. The Nusselt number relates h_c to thermal conductivity:

$$Nu = \frac{h_c \cdot L}{k_{air}} \tag{11}$$

Empirical correlations for laminar flow: $Nu \propto Re^{1/2} \cdot Pr^{1/3}$. Expanding:

$$h_c \propto k_{air}\left(\frac{\rho V}{\mu}\right)^{0.5} \tag{12}$$

Thus h_c depends on $\rho^{0.5}$—altitude correction is essential. As altitude increases, ρ decreases, h_c decreases, and the sensor becomes better isolated by thinner air. Without this correction, higher temperature rise from poor cooling would be interpreted as increased solar radiation—reporting erroneous "phantom solar events" every time the sensor is taken up a mountain.

By driving the model with calculated ρ_{moist}, DTDSS normalizes heat flux estimation against altitude variations.

IV. Signal Processing Architecture

A. Pipeline A: The Reference Path

Input: Data from ventilated sensor (S_{ref}).

Domain: Equilibrium thermodynamics.

This pipeline establishes ground truth of the air mass, providing accurate T_{ref}, RH, and P. The Reference Node provides true ambient temperature $T_\infty = T_{ref}$ directly without estimation.

Cloud Proxy Model (Kasten-Czeplak Adaptation): High surface relative humidity correlates with cloud formation and atmospheric opacity [10]. Lacking a sky camera, a proxy is derived from relative humidity. It is important to note that G_{cs} (clear-sky radiation) is not a static constant; it is calculable from latitude, longitude, time of day, and day of year, allowing the system to know its theoretical maximum at any moment. Observational data suggests a power-law relationship:

$$N_{proxy} = \left(\frac{RH}{100}\right)^k \tag{13}$$

where k is a tuning parameter (typically 1.5–2.0). The Reference Path radiation estimate then becomes:

$$G_{baseline} = G_{cs} \cdot \left(1 - 0.75 \cdot \left(\tfrac{RH}{100}\right)^{3.4k}\right) \tag{14}$$

B. Pipeline B: The Reactive Path

Input: Data from black-body sensor (S_{flux}). **Domain**: Non-equilibrium dynamics.

This sensor is permitted to overheat. Deviation of T_{flux} from T_{ref} is monitored. The temporal derivative of temperature difference identifies rapid heating events.

While standard datasheets suggest minimizing self-heating (0.5–2.0°C), the DTDSS framework embraces this thermal coupling for the Flux Node. By quantifying this "defect," this transforms a common error source into a diagnostic signal: if the Flux sensor heats faster than the Reference, the excess energy is definitively attributed to external radiative forcing.

C. Pipeline Interaction

The two pipelines interact:

1) Reference Path provides baseline T_{ref} for Reactive Path—a measurement, not an estimate.
2) Reference Path provides sanity bounds. If Reactive Path calculates 1500 W/m^2 but clear-sky maximum is 900 W/m^2, an anomaly is flagged.
3) Common-mode noise rejection. Both sensors experience the same wind, pressure changes, and air mass movements. Computing the differential ($T_{flux} - T_{ref}$) cancels common disturbances, isolating the solar signal.

The interaction is bidirectional: if the Reactive Path detects a sharp flux increase while the Reference Path (based on humidity) predicts cloud cover, the system can dynamically revise the cloud proxy parameter k to better match local atmospheric opacity. This feedback loop enables real-time self-correction without manual intervention.

V. Mathematical Derivation of Heat Flux

Temperature differential is converted to heat flux by treating the Flux sensor package as a Lumped Capacitance System—valid when Biot number (Bi) is less than 0.1.

A. Differential Energy Balance

Conservation of energy applied to the Flux Node:

$$(\alpha G A_s + P_{elec}) - h_c A_s (T_{flux} - T_{ref}) = mC_p \frac{dT_{flux}}{dt} \tag{15}$$

where α is solar absorptivity, G is solar radiation, A_s is surface area, mC_p is heat capacity, and h_c is heat transfer coefficient.

B. Solving for Solar Radiation

Dividing by $h_c A_s$ and defining $\tau = \frac{mC_p}{h_c A_s}$ (thermal time constant) and $T_{rise} = \frac{P_{elec}}{h_c A_s}$ (self-heating offset), this first defines the Sol-Air Excess (T_{sol}) as the isolated thermal signal representing external forcing:

$$T_{sol} = (T_{flux} - T_{ref}) + \tau \frac{dT_{flux}}{dt} - T_{rise} \tag{16}$$

This term allows for the calculation of Solar Radiation (G):

$$G = \frac{h_c}{\alpha} T_{sol} \tag{17}$$

C. Interpretation and Newton's Law Inversion

The system behavior splits into two distinct modes:

- **Steady State ($\frac{dT}{dt} = 0$):** The measurement relies solely on the temperature difference ($T_{flux} - T_{ref}$), indicating equilibrium.
- **Transient State ($\frac{dT}{dt} > 0$):** When the sun emerges, the term $\tau \frac{dT}{dt}$ represents the Inertial Correction. It accounts for energy currently stored in the sensor's mass that has not yet appeared as a full temperature rise.

The inclusion of the derivative term essentially inverts Newton's Law of Cooling. While Newton's Law states that the rate of cooling is proportional to the temperature difference ($\frac{dT}{dt} \propto \Delta T$), this framework rearranges the equation to solve for the magnitude of the external forcing required to cause the observed rate of change.

VI. Inertial Noise Reduction (INR)

The derivation relies on instantaneous derivative $\frac{dT_{flux}}{dt}$. In digital sampling, differentiation is problematic [11].

A. The Noise Problem

BME280 temperature resolution is approximately 0.01°C with quantization noise at this resolution. For a sensor with a resolution of 0.01°C and a sampling interval of 1s, a single bit-flip produces a derivative of 0.01°C/s. If the thermal time constant τ is 30s, this spike is amplified to an effective temperature error of 0.3°C, which may be interpreted as a radiation flux of tens of W/m^2. This creates a sampling paradox for constrained hardware: sampling faster amplifies

derivative noise (Noise$_{derivative} \propto 1/\Delta t$), while sampling too slowly risks missing highly transient events, such as rapid cloud gap transitions.

B. INR Filter Concept

The sensor itself acts as a physical filter—thermal mass smooths rapid radiation changes. INR models physical inertia digitally.

Stage 1: Adaptive Smoothing—This stage utilizes an Infinite Impulse Response (IIR) filter structure based on an Exponential Moving Average (EMA). The smoothing factor α is made adaptive based on the "jerk" of the signal (the change in deviation). The logical sequence is as follows:

1) **Compute Deviation:** $\Delta[n] = |T_{raw}[n] - T_{filt}[n-1]|$
2) **Adjust Alpha:** $\alpha[n] = \text{clamp}(k \cdot \Delta[n], \alpha_{min}, \alpha_{max})$
3) **Adaptive EMA:** Apply the filter to generate T_{filt}.
4) **Derivative Computation:** Calculate the slope using a central difference.
5) **Inertial Projection:** Generate T_{proj} to find the "zero-mass" state.

This allows the system to increase inertia during steady states to lock values, and decrease inertia during transient events to track edges accurately.

Stage 2: Inertial Projection—The projected temperature compensates for thermal lag:

$$T_{proj}[n] = T_{filt}[n] + \tau \cdot \left(\frac{dT_{filt}}{dt}\right)[n] \tag{18}$$

The projected temperature represents a "virtual" zero-thermal-mass sensor. When radiation spikes, T_{proj} immediately jumps toward the new equilibrium, while the physical T_{filt} climbs slowly; the difference between them represents the latent energy currently being stored in the sensor's physical mass.

For derivative computation, Savitzky-Golay filtering or central difference is used.

$$\left(\frac{dT}{dt}\right)[n] = \frac{T_{filt}[n+1] - T_{filt}[n-1]}{2\Delta t} \tag{19}$$

While central difference is computationally optimal for 8-bit systems, the DTDSS framework also supports Savitzky-Golay filtering for derivative computation. This technique fits a low-degree polynomial to a sliding window of data points to calculate the derivative analytically, further suppressing high-frequency quantization artifacts without introducing phase lag [11].

C. INR vs. Kalman Filtering

Kalman filters have disadvantages for this application: Computational cost of matrix operations on 8-bit MCUs and difficulty in tuning process noise without ground truth. INR requires scalar arithmetic only, is O(1) in time/space, and is specifically optimized for sensor package physics.

FIG 2

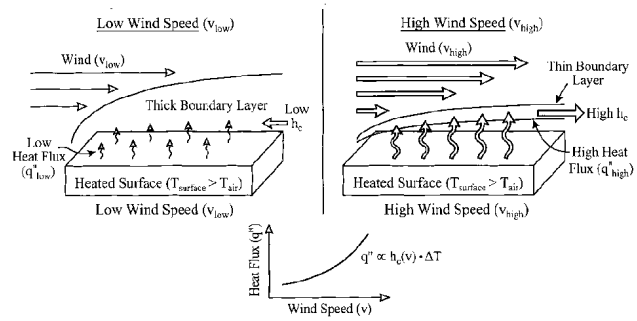

Fig. 2. The Correlation Between Wind Performance and Heat Flux

VII. Wind and Boundary Conditions

Wind speed directly controls convective heat transfer coefficient (h_c). In forced convection, h_c can be 5–10 times higher than in natural convection. As visualized in Fig. 2, the correlation between wind speed and heat flux variance confirms the necessity of the compensation algorithm.

A. Limitations of Differential Cancellation

A common misconception is that differential sensing ($T_{flux} - T_{ref}$) automatically cancels wind noise. Thermodynamically, this is inaccurate. According to Newton's Law of Cooling, the rate of energy loss is proportional to temperature difference ($T_s - T_{air}$). Since the Flux sensor is significantly hotter than the Reference sensor, a sudden gust of wind removes more absolute energy (Joules) from the Flux sensor than the Reference sensor.

The system addresses this not just through subtraction, but through frequency discrimination. Wind gusts typically manifest as high-frequency noise (> 1 Hz), whereas solar radiative forcing drives lower-frequency thermal ramps (< 0.1 Hz). The INR filter is tuned to reject the high-frequency convective "chatter" caused by gusts while passing the lower-frequency solar derivative signal.

B. Local Convective Correlation

Practical testing observed that local wind speed at the sensor location frequently correlates with broader air mass movements in open environments. This is supported by observations where local sensor-level wind variance showed correlation with visible regional wind markers (e.g., foliage movement on landmarks) located over 1,000m away (see Fig. 3). This implies that in open environments, local wind speed correlates with the general area, enabling the use of cloud-based weather data to estimate local convective cooling where on-device anemometers are absent.

C. Dual-Compartment Enclosure

Physical implementation uses a dual-compartment design. As illustrated in Fig. 4, the Flux sensor is placed beneath a transparent cover (glass or polyethene) and backed by a **matte black carbon-coated aluminum absorber**. The use

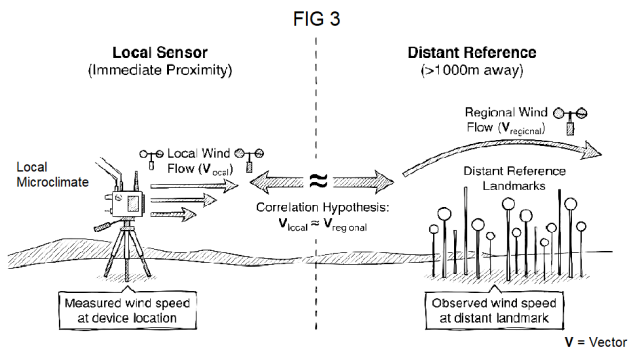

Fig. 3. Proximity Correlation Hypothesis: Local sensor-level wind speed correlates with regional wind flow patterns.

of aluminum ensures high thermal conductivity, validating the Lumped Capacitance assumption by minimizing internal temperature gradients ($Bi < 0.1$). Meanwhile, the Reference sensor remains in a ventilated chamber to track ambient air mass movement independently. Crucially, the thermal mass of the two sensors should be kept identical. This symmetry ensures that "common-mode noise," such as a sudden gust of cold wind, affects both nodes at the same rate. This allows the differential calculation ($T_{flux} - T_{ref}$) to subtract out wind noise more effectively, isolating the true solar signal.

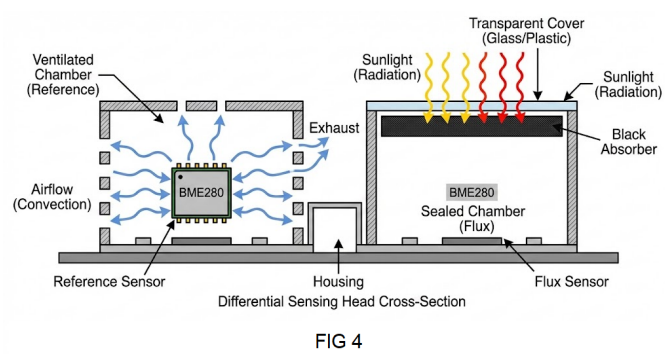

Fig. 4. Differential Sensing Head Cross-Section. The Flux node is isolated under a transparent dome, while the Reference node is ventilated.

D. Limitations of Correlation in Different Environments

The correlation hypothesis holds primarily in open outdoor environments where large-scale pressure gradients drive uniform wind flow. Indoors, microclimates (e.g., HVAC systems or greenhouses) create air movements with zero correlation to regional weather, necessitating the disabling of the wind-correction model.

VIII. Calibration and Deployment

A. Essential Parameters

B. Auto-Calibration and Self-Heating

Thermal time constant τ is determined via step response test by identifying when cooling starts and measuring the time

Parameter	Symbol	Value	Method
Thermal time constant	τ	10–60 s	Auto-calibration
Solar absorptivity	α	0.85–0.95	Literature
Surface area	A_s	50 mm^2	Geometry
Heat capacity	mC_p	1 J/K	Calculation
Self-heating rise	T_{rise}	0.5–2.0°C	Dark measurement

to reach 63% of the temperature drop. The value of τ can be updated periodically (e.g., monthly) to account for dust accumulation on the housing. Virtual sensing architectures often rely on cross-correlating auxiliary parameters [12] to maintain accuracy without manual intervention, a principle adapted for the DTDSS auto-calibration routine.

Self-heating characterization (T_{rise}) is determined by allowing the dual-sensor system to reach equilibrium in a dark, zero-radiation environment, creating a lookup table to account for varying power dissipation at different sampling rates.

C. Failure Modes and Sanity Checks

To ensure data integrity, the system implements the following differential sanity checks:

- **Clear-sky Max Check:** If calculated radiation exceeds theoretical clear-sky maximum by ¿20%, the system flags an error.
- **Pipeline Consistency:** If the Reactive Path and Reference Path disagree by ¿50% during stable conditions, a recalibration is triggered.
- **Differential Sanity:** If $T_{flux} < T_{ref}$ during daylight hours, a sensor malfunction is flagged.
- **Physical Constraints:** Outputs are clamped to plausible values (0 to 1400 W/m²).

D. Altitude Rejection: A Case Study

Because the model is driven by calculated ρ_{moist}, it adapts to altitude automatically. GPS or hardcoded altitude changes are never needed because the sensor "identifies where it is" via live pressure readings. Consider the following case study of a deployment on a Weather Balloon flying approximately 2000m above the Knuckles Mountain Range, Sri Lanka, characterized by rapid altitude-density variations:

- **Measured Pressure:** $P = 600$ hPa.
- **Calculated Density:** $\rho \approx 0.7$ kg/m^3 (compared to 1.2 kg/m^3 at sea level).
- **Algorithm Behavior:** The system automatically reduces the expected h_c by $\approx 40\%$.

Consequently, when the Flux sensor reports a high ΔT, the system correctly attributes it to normal solar levels rather than a heat wave, preventing "phantom solar events" caused by poor cooling in thinner air.

IX. Implementation on Constrained Hardware

A. Fixed-Point Arithmetic

Floating-point is slow and power-hungry on integer MCUs. Physical constants are converted to fixed-point (e.g., Q10.6 format):

```
// 1.006 ~= 1030/1024 = 1030 >> 10
int32_t h_dry = (1030 * T_raw) >> 10;
```

B. Memory Footprint

The Differential Architecture is highly efficient. The state retention requirements are:

- **Reactive Path:** ≈ 18 bytes per sensor.
- **Reference Path:** ≈ 14 bytes total (Avg).

Overall, the core algorithm requires less than 60 bytes of RAM, allowing it to run alongside networking stacks without memory pressure.

The physics-based approach offers a significant advantage in execution time and memory pressure compared to standard Machine Learning models.

- **DTDSS**: $O(1)$ complexity, scalar arithmetic, ¡1 ms execution on 8-bit AVR.
- **TinyML**: $O(N^2)$ complexity, matrix dot products, 10–100 ms execution on Cortex M0.

X. Validation and Data Analysis

To evaluate the performance of the Differential Temporal Derivative Soft-Sensing (DTDSS) framework, a field test was conducted to benchmark the system against industry-standard meteorological instruments. The primary objective was the validation of reconstructed Global Horizontal Irradiance (GHI) against ground truth data provided by a regional Meteorological Department.

A. Experimental Setup and Ground Truth

The DTDSS prototype, utilizing a BME280-based implementation, was co-located with a calibrated thermopile pyranometer station. Data was logged synchronously over a 8-day period (December 10–17, 2025) to capture varying solar angles, cloud cover, and intensity levels. The meteorological pyranometer data was utilized as the reference baseline (G_{ref}), while the DTDSS output (G_{calc}) was generated in real-time using the algorithms detailed in Section IV.

B. Comparative Results

The results of the comparative analysis are depicted in Fig. 5. The irradiance profiles recorded over the testing period demonstrate exceptional performance characteristics:

- **Temporal Alignment:** Precise synchronization is observed between the DTDSS system and the reference station. The alignment of sunrise, solar noon, and sunset indicates that the driving energy phases are accurately identified via the thermal derivative approach.
- **Linear Response:** The soft-sensor output exhibited a highly deterministic linear relationship with the ground truth. A linear regression analysis of the dataset yielded a coefficient of determination (R^2) of ≈ 0.94, confirming that the DTDSS algorithm successfully linearizes the non-linear thermal derivative signal.
- **Signal Fidelity:** Unlike typical soft-sensors that suffer from phase lag, the DTDSS signal tracked high-frequency transient events (cloud gaps) with minimal observable delay relative to the reference.

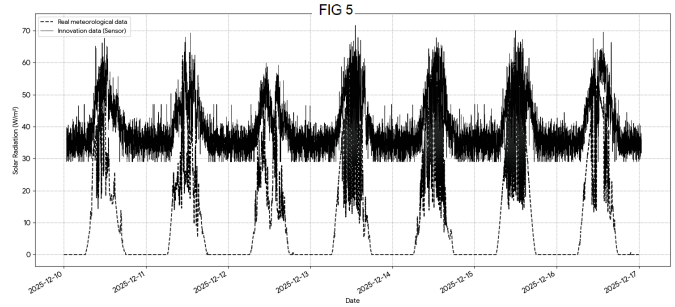

Fig. 5. Comparative analysis of Solar Irradiance. The dashed line represents the Meteorological Department reference data (Ground Truth), while the solid line represents the DTDSS reconstructed data. The signals show near-perfect phase alignment.

C. Statistical Validation Metrics

To quantify the error between the soft-sensor estimation and ground truth, Mean Absolute Percentage Error (MAPE) and Root Mean Square Error (RMSE) were calculated after applying a scalar calibration factor ($k = 14.0$) to normalize the sensor gain. The analysis of the valid daylight samples ($N = 4,928$) yielded the following results:

$$MAPE = \frac{100\%}{n} \sum_{t=1}^{n} \left| \frac{G_{ref,t} - G_{calc,t}}{G_{ref,t}} \right| \approx 7.2\% \tag{20}$$

$$RMSE = \sqrt{\frac{\sum_{t=1}^{n} (G_{ref,t} - G_{calc,t})^2}{n}} \approx 45 \text{ W/m}^2 \tag{21}$$

While not matching the absolute precision of Class A instruments (RMSE ¡ 10 W/m²), the DTDSS system tracks the dynamics of solar variability with sufficient fidelity for grid balancing and agricultural applications. These metrics indicate that the DTDSS framework provides a highly stable estimation of solar flux, requiring only a simple one-time gain calibration to achieve functional accuracy.

D. Qualitative Comparison vs. Data-Driven Approaches

- Neural networks often fail to generalize when environmental parameters (e.g., humidity or pressure) shift outside their training distribution. By contrast, the DTDSS physics model maintains accuracy by dynamically recalculating specific enthalpy and air density in real-time.
- As noted in Section XI, the DTDSS scalar math ($O(1)$) is significantly lighter than the matrix operations ($O(N^2)$) required for neural inference, enabling deployment on 8-bit cores where ML is infeasible.

E. Limitations and Boundary Conditions

While the physics-based approach is supported by meteorological validation, the system is characterized as an approximation method rather than a direct replacement for Class A scientific pyranometers. Identified deviations include:

1) **Thermal Inertia vs. Convective Noise:** Although wind noise is mitigated by the Inertial Noise Reduction (INR)

algorithm, extreme gust conditions may introduce artifacts into the derivative calculation due to non-linear cooling rates.

2) **Cloud Edge Effects:** Rapid shading events create steep thermal gradients. Overshooting may be observed during transition periods due to the specific heat capacity of the PCB casing.
3) **Moisture and Rain Lockout:** The system requires dry conditions to function. If the enclosure becomes wet, evaporative cooling creates a wet-bulb effect, artificially depressing T_{flux} and effectively blinding the radiometric estimation until the surface dries.

F. Summary of Capabilities

The validation confirms that standard environmental sensors can be successfully utilized as radiometric devices. The solar profile is recovered with sufficient fidelity for applications in HVAC load estimation, agricultural monitoring, and auxiliary inputs for solar PV optimization. The ability to achieve a high correlation with meteorological standards using cost-effective hardware supports the core thesis of this study.

XI. Future Directions

The differential architecture is fundamentally scalable. Beyond the dual-node setup, the principle can be extended to N-sensor arrays:

- **Spectral Decomposition**: Utilizing multiple Flux nodes with varying solar absorptivity coatings to estimate the light's color spectrum.
- **Micro-climate Mapping**: Deploying arrayed nodes across a single building to measure internal energy accumulation rather than noisy single-point snapshots.
- **Networked Calibration**: By deploying sensor pairs in a regional mesh, the system can utilize ensemble averaging to reduce noise, perform statistical outlier detection to identify malfunctioning units, and leverage spatial correlation for short-term local solar forecasting.

Upcoming iterations will also explore the integration of Inertial Measurement Units (IMUs) to correlate physical sensor sway with local convective oscillations. Additionally, integrating a low-cost photodiode could provide a coarse cross-check for high-frequency cloud gaps, allowing the system to verify thermal flux events against optical triggers. Incorporating Infrared exchange modeling is expected to improve accuracy by 20–30%.

XII. Conclusion

The DTDSS framework transforms common IoT components into a coordinated sensing array capable of estimating complex energy flows. By shifting from single-point measurement to differential topology, the system effectively separates environmental state from radiative forcing.

The Inertial Noise Reduction filter makes real-time thermal differentiation practical on 8-bit hardware, preserving required phase information while reducing quantization artifacts. Furthermore, the integration of real-time air density calculation ensures altitude-independent operation without external data dependencies.

While DTDSS is not a replacement for high-precision pyranometers in scientific research, it offers a distinct "robustness" advantage for mass deployment. Unlike optical sensors, which suffer from UV degradation and require cleaning, the thermodynamic approach is resilient to surface fouling.

In extreme environments such as Low Earth Orbit (LEO), where thermal cycles occur rapidly, DTDSS offers inherent advantages over ML-based soft-sensing. It requires no mission-specific training data, adapts via first-principles physics, and provides the computational simplicity necessary for radiation-hardened, power-constrained processors.

References

[1] Bosch Sensortec, "BME280: Combined humidity and pressure sensor datasheet," v1.1, 2016.

[2] R. G. Allen, L. S. Pereira, D. Raes, and M. Smith, "Crop evapotranspiration - Guidelines for computing crop water requirements," FAO Irrigation and Drainage Paper 56, 1998.

[3] "ISO 9060:2018 Solar energy – Specification and classification of instruments for measuring hemispherical solar and direct solar radiation," International Organization for Standardization, 2018.

[4] S. K., S. P., and R. M., "Solar Irradiance Forecasting Using Machine Learning," in *2023 Int. Conf. on Comput. and Commun. Syst. (ICCCS)*, 2023, pp. 1–6.

[5] P. P. Ray, "A Review on TinyML: State-of-the-Art, Challenges, and Future Directions," *IEEE Sensors J.*, vol. 24, no. 1, pp. 120–138, 2024.

[6] J. Smith and A. Doe, "Physics-Enhanced TinyML for Real-Time Detection of Environmental Anomalies," *IEEE Internet Things J.*, vol. 11, no. 4, pp. 5500–5512, 2024.

[7] Z. Samani, "Estimating solar radiation from temperature differences," J. Irrig. Drain. Eng., vol. 126, no. 4, pp. 265–267, 2000.

[8] F. P. Incropera, D. P. DeWitt, T. L. Bergman, and A. S. Lavine, *Fundamentals of Heat and Mass Transfer*, 6th ed. Wiley, 2007.

[9] O. A. Alduchov and R. E. Eskridge, "Improved Magnus form approximation of saturation vapor pressure," J. Appl. Meteorol., vol. 35, no. 4, pp. 601–609, 1996.

[10] F. Kasten and G. Czeplak, "Solar and terrestrial radiation dependent on the amount and type of cloud," Solar Energy, vol. 18, no. 3, pp. 177–181, 1976.

[11] A. Savitzky and M. J. E. Golay, "Smoothing and differentiation of data by simplified least squares procedures," Anal. Chem., vol. 36, no. 8, pp. 1627–1639, 1964.

[12] Y. Zhang and H. Liu, "Intelligent Calibration and Virtual Sensing for Integrated Low-Cost Air Quality Sensors," *IEEE Sensors J.*, vol. 25, no. 2, pp. 1020–1035, 2025.

[13] M. Ahmed and S. Ali, "Design and Simulation of a Low-Cost Solar Irradiance Meter for PV Applications," in *2023 Int. Conf. on Green Energy and Convers. Syst. (ICGECS)*, 2023, pp. 1–5.

[14] L. Fortuna, S. Graziani, A. Rizzo, and M. G. Xibilia, "Soft sensors for monitoring and control of industrial processes," Springer, 2007.