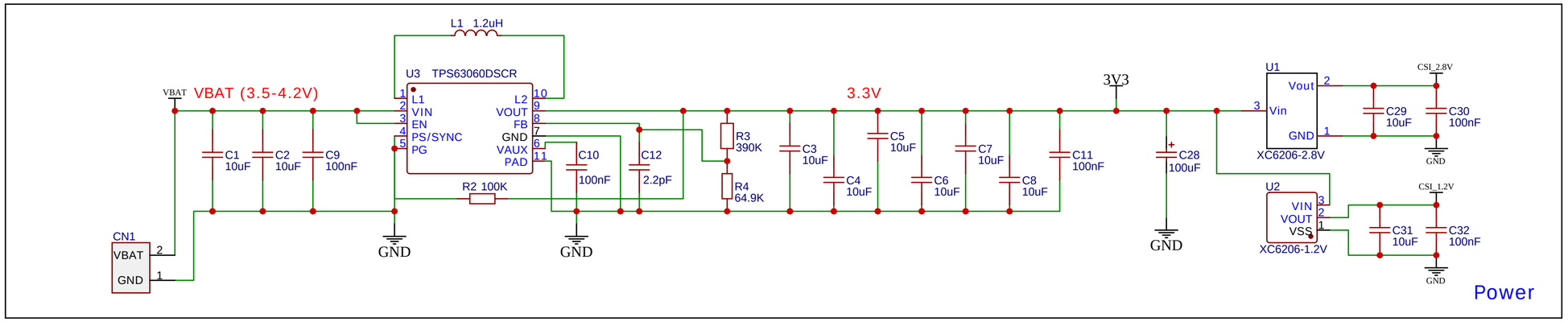

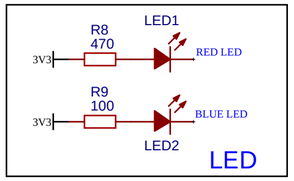

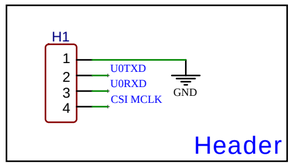

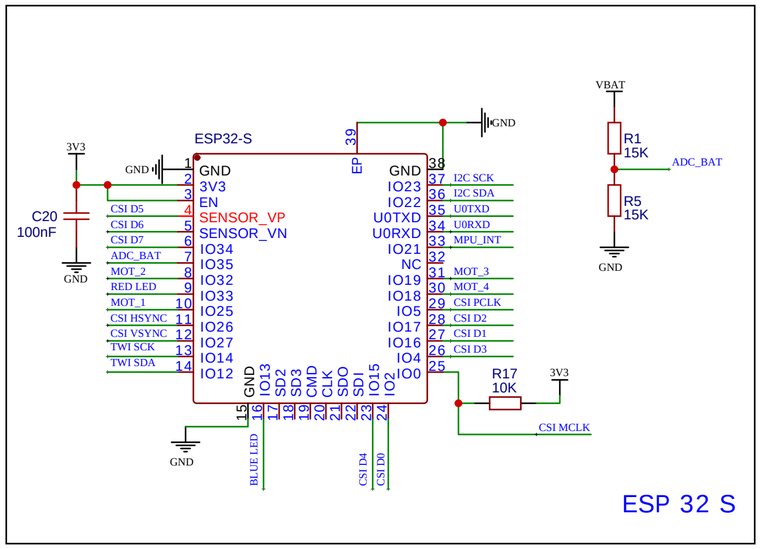

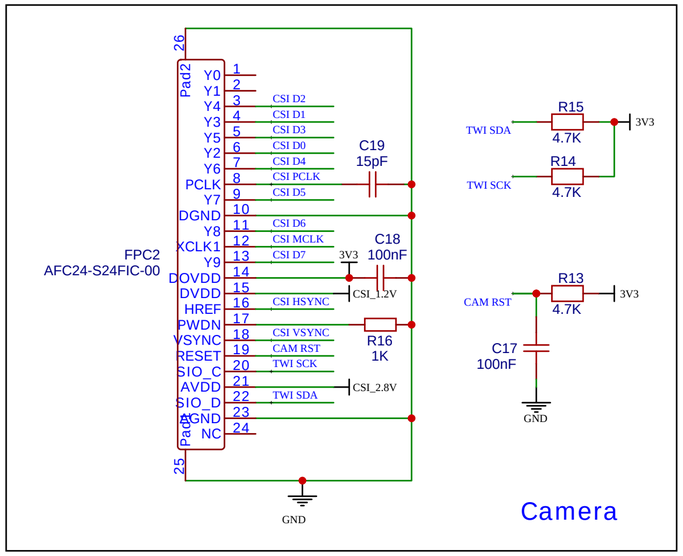

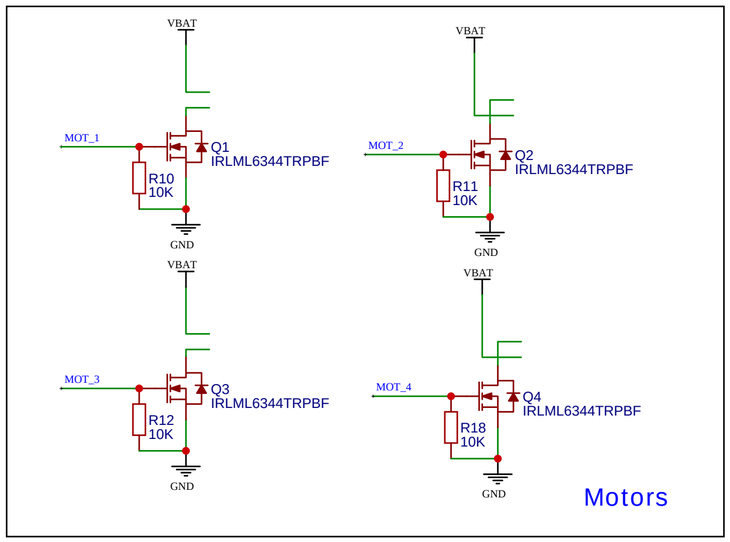

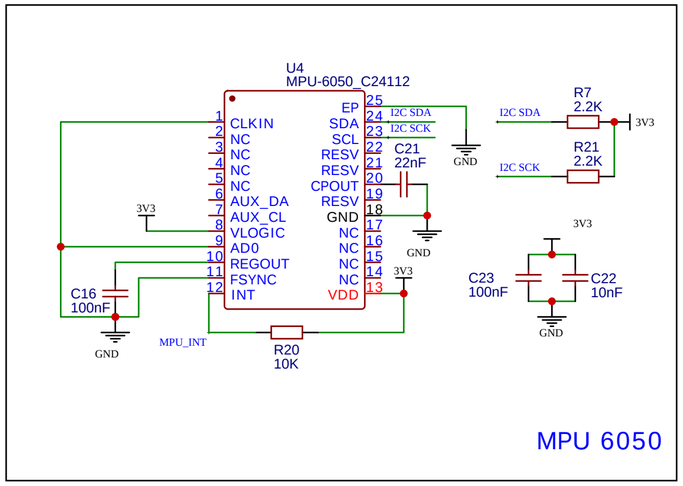

TITLE: ESP32 Mini Drone		REV: 1.0
NH Labs ®	Company: Nelsen-Huang Labs	Sheet: 1/1
	Date: 20 Dec 2020 Drawn By: Us	