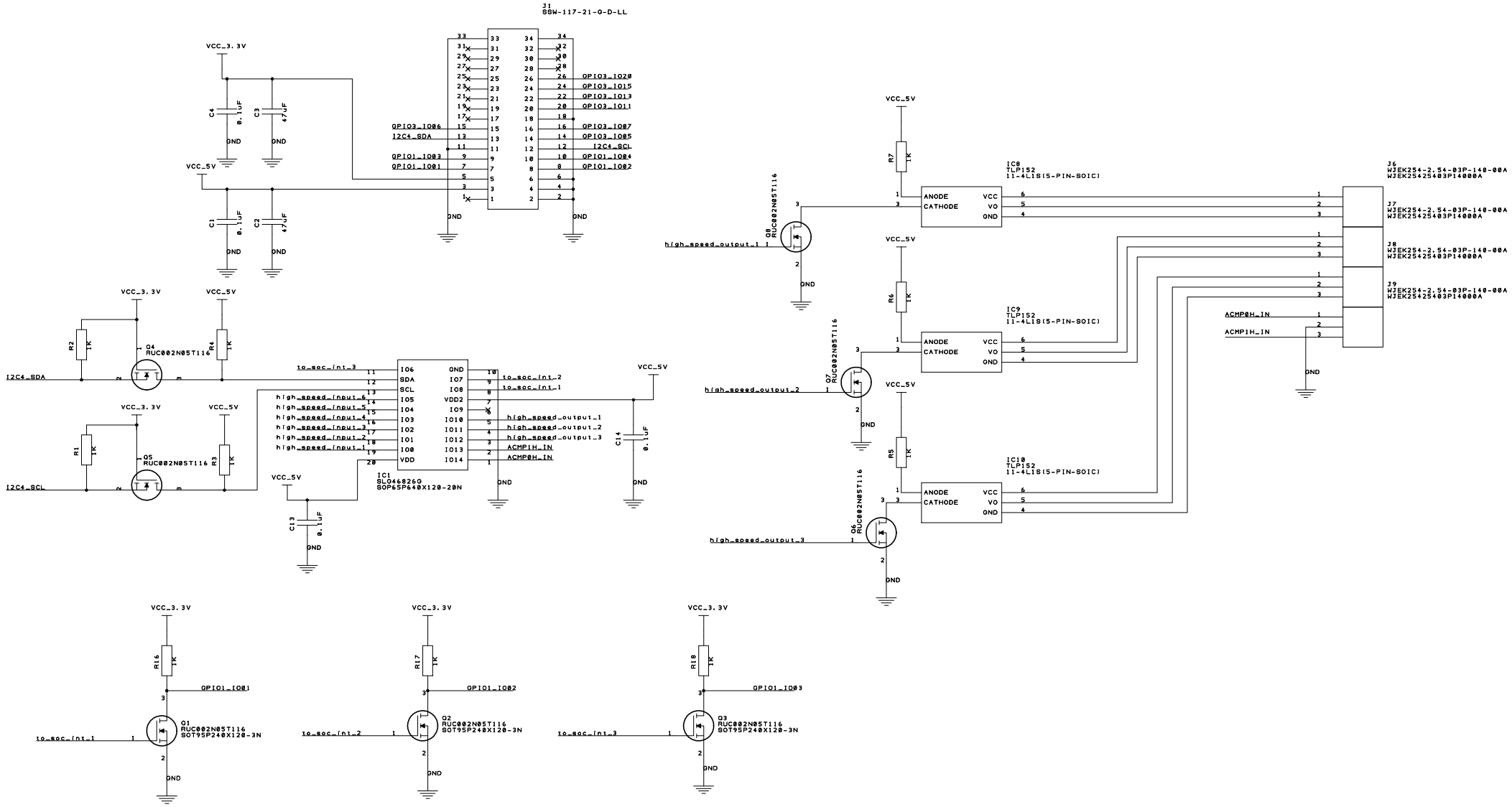

PROJECT:		
DRAWING TITLE:		
DRAWN BY:	REVISION:	
SHEET: OF	STATUS:	
DATE:	DESIGNSPARK PCB available for FREE at www.DesignSpark.com/PCB	

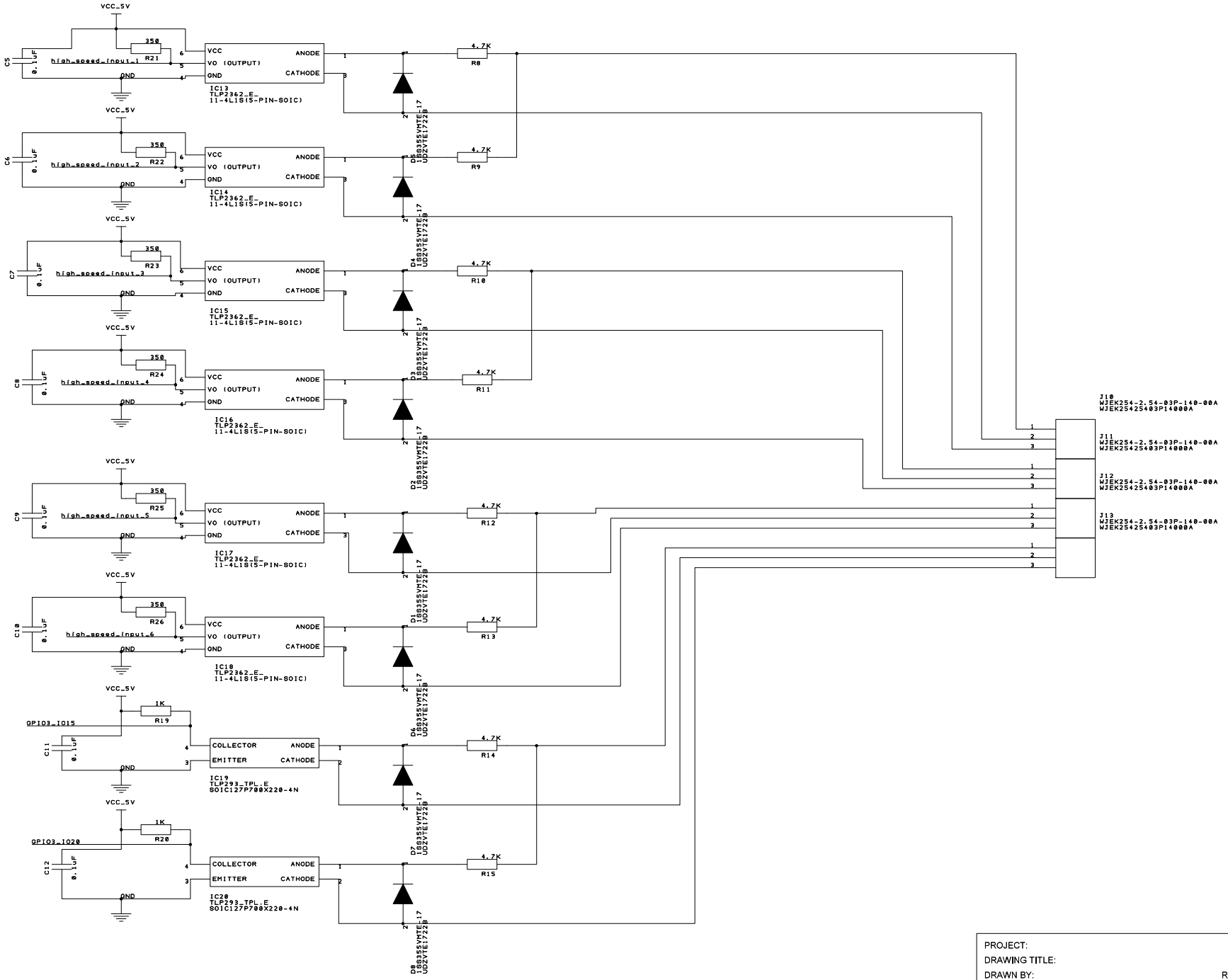

PROJECT:	
DRAWING TITLE:	
DRAWN BY:	REVISION:
SHEET: OF	STATUS:
DATE:	DESIGNSPARK PCB available for FREE at www.DesignSpark.com/PCB