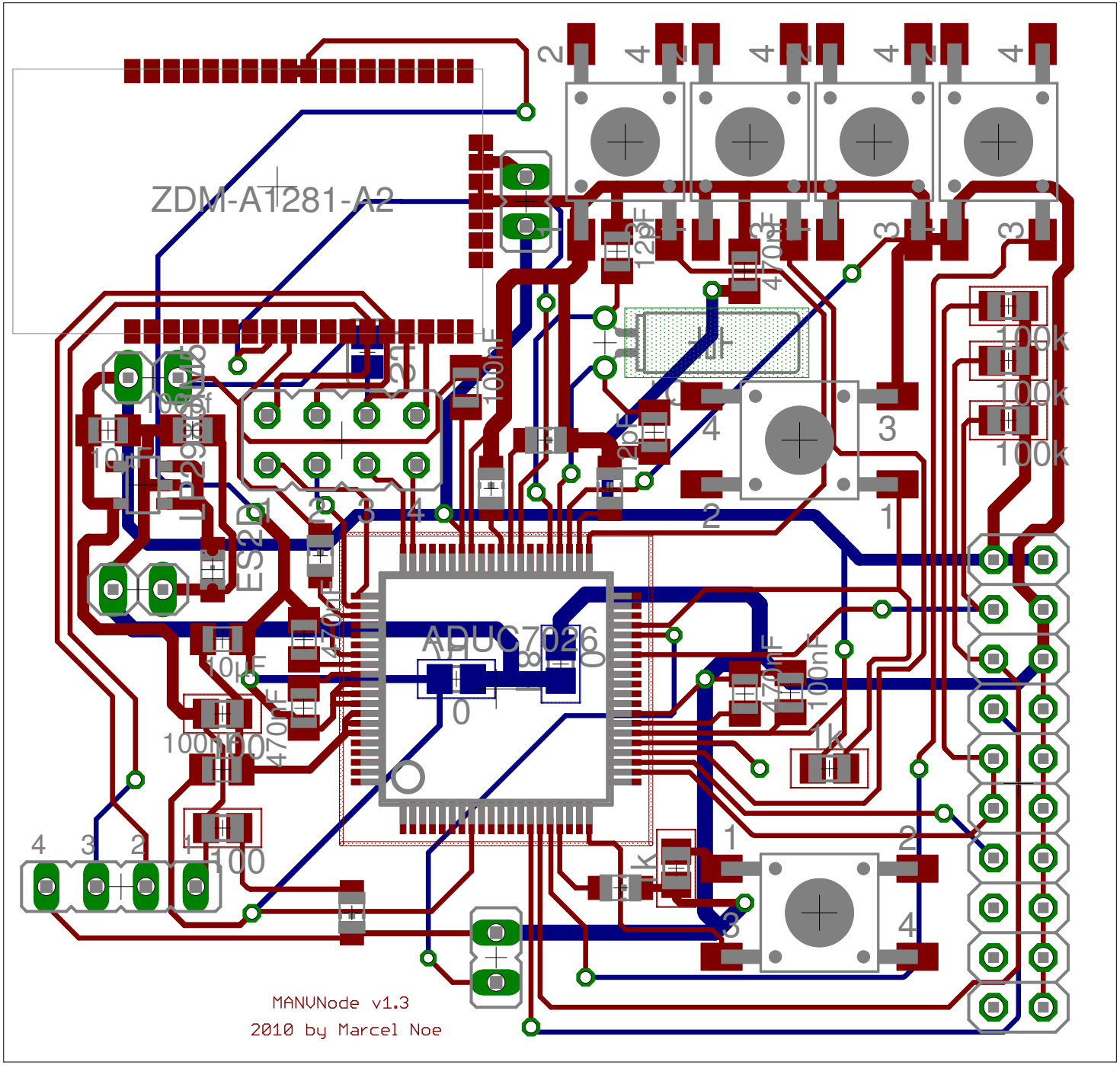
ZDM-A1281-A2
ADUC7026
ESD
100k
100k
100k
1k
1k
100
MANVNode v1.3
2010 by Marcel Noe