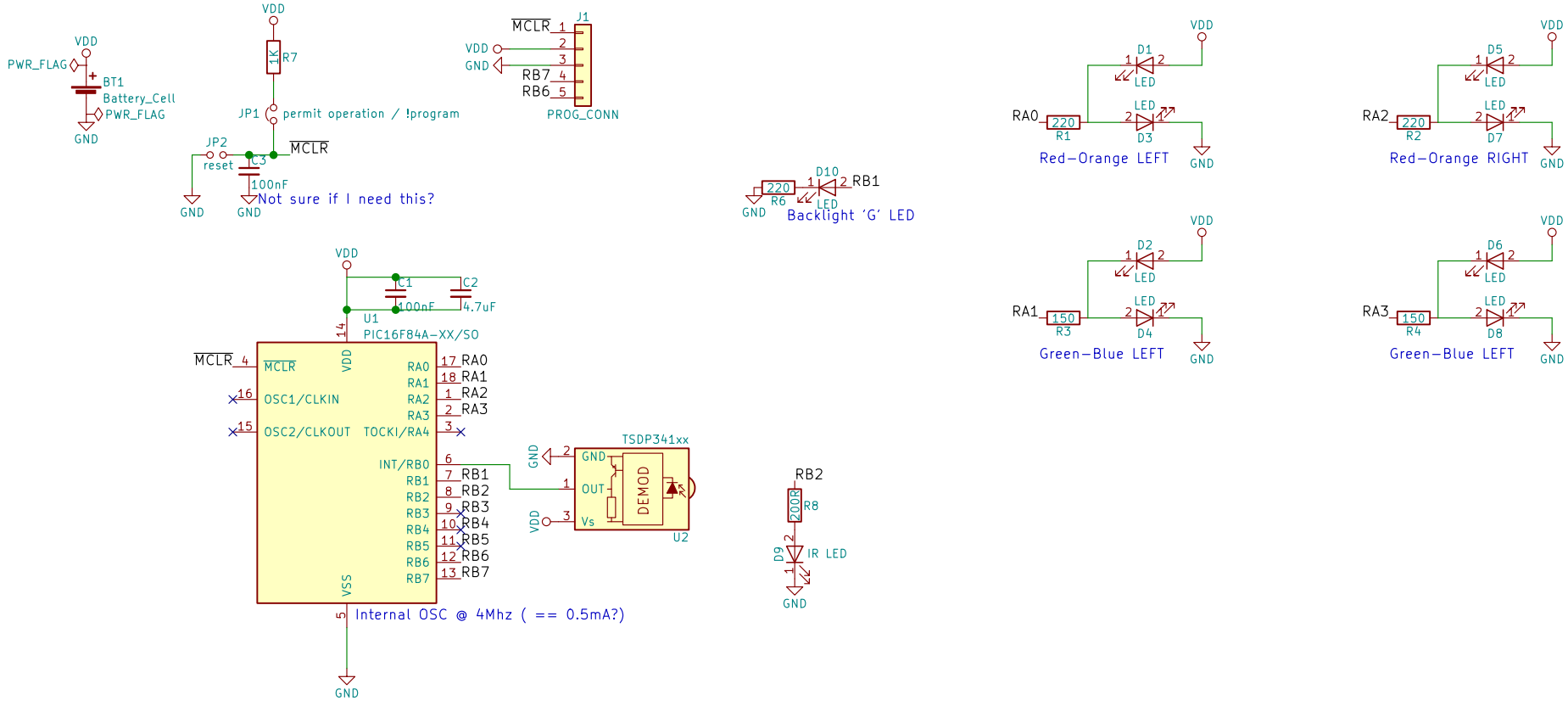

OUT FOR REVIEW 2018-03-06
0xG prototype to test programming, LEDs, IR, ISCP.
Google LLC

Sheet: /
File: badgeelec.sch

Title: LED prototype

Size: A4	Date: 2018-03-06	**Rev: 1**
KiCad E.D.A. kicad 4.0.7		Id: 1/1