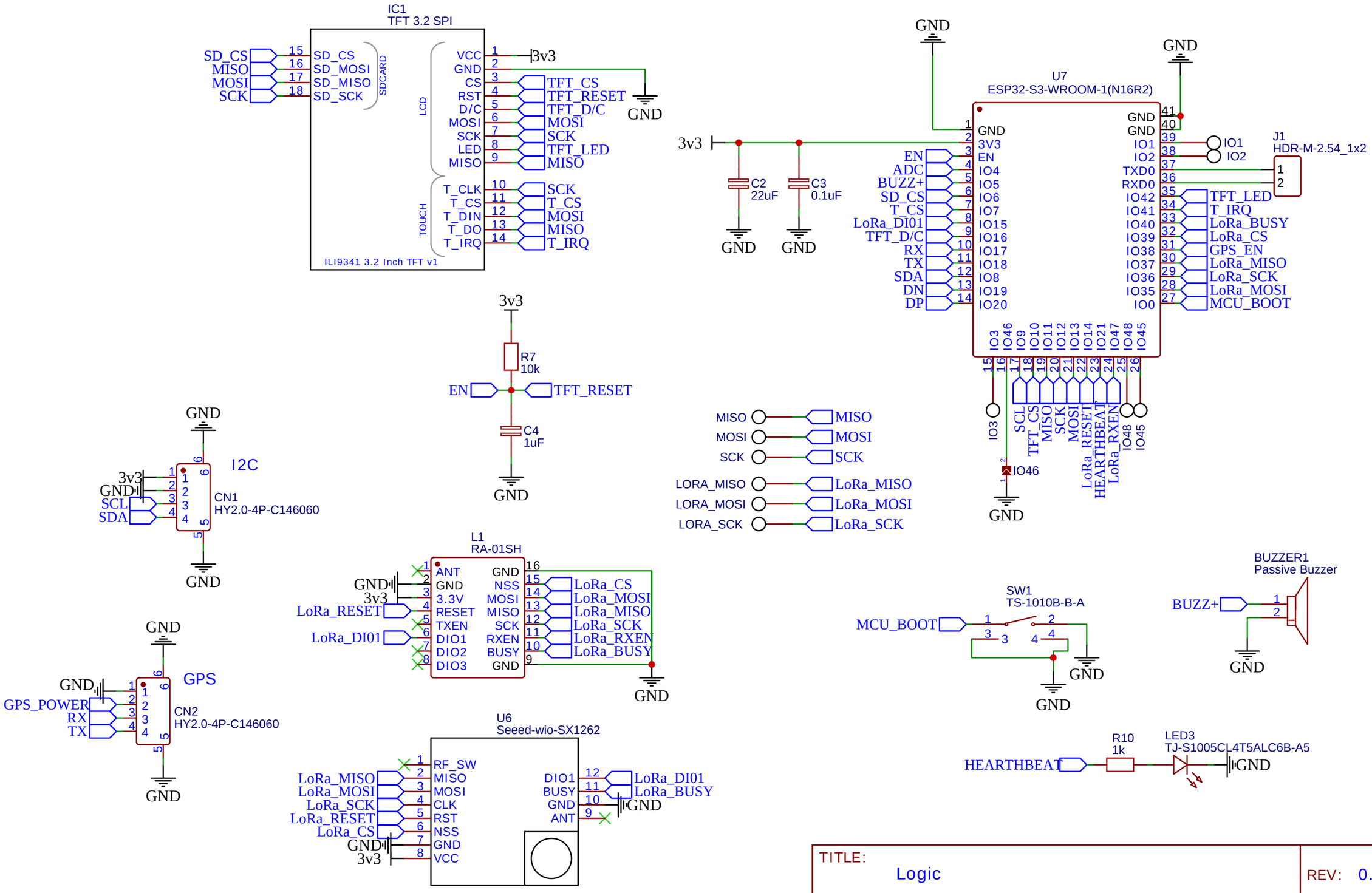

TITLE: Logic	REV: 0.3
EasyEDA	Company: Your Company
	Sheet: 1/2
	Date: 2024-10-16 Drawn By: valzzu

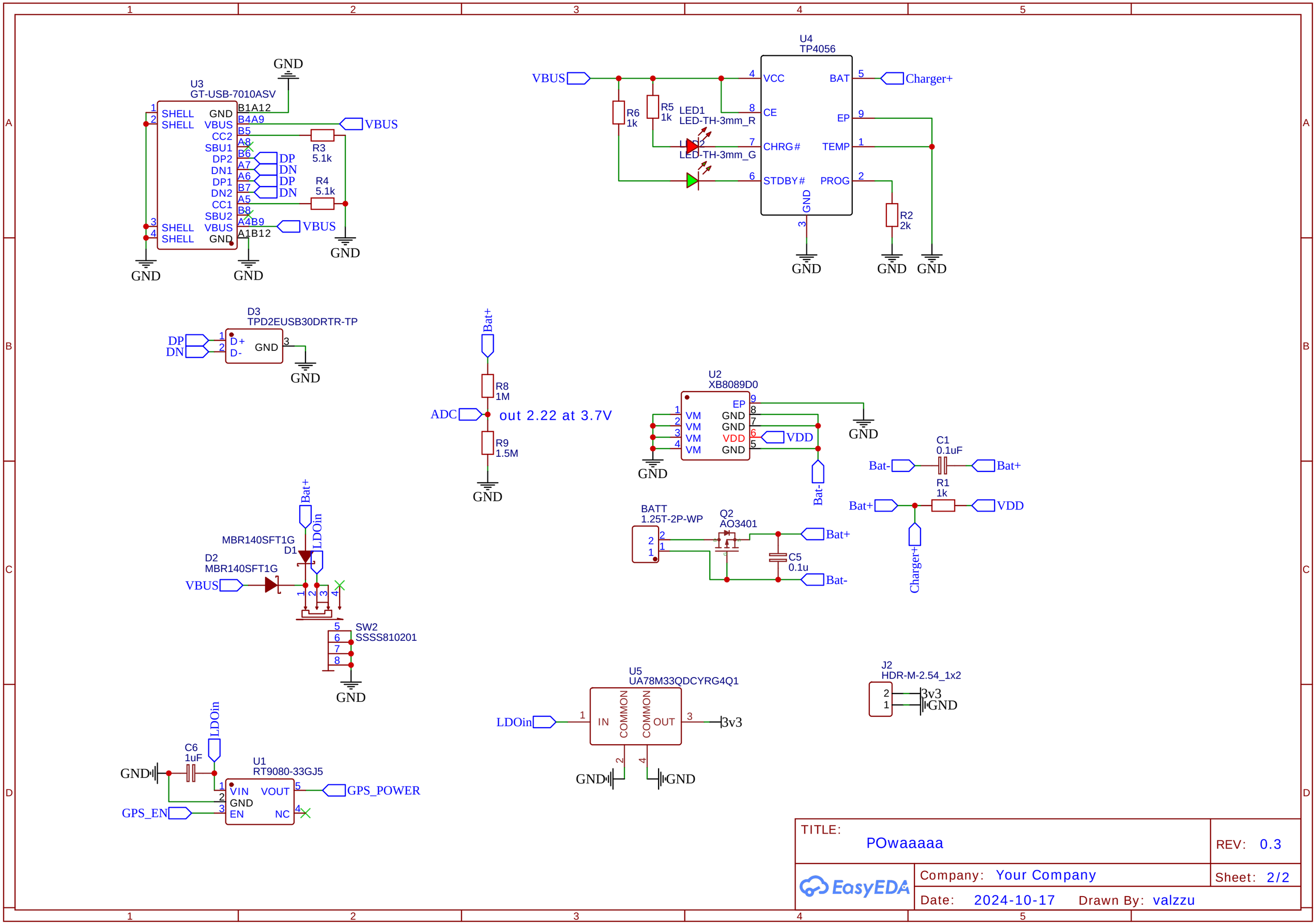
U3
GT-USB-7010ASV
SHELL GND
SHELL VBUS
CC2
SBU1
DP2
DN1
DP1
DN2
CC1
SBU2
SHELL VBUS
SHELL GND
B1A12
B4A9
B5
A8
B6
A7
A6
B7
A5
B8
A4B9
A1B12
VBUS
DP
DN
DP
DN
R3
5.1k
R4
5.1k
GND
U4
TP4056
VCC
CE
CHRG#
STDBY#
BAT
EP
TEMP
PROG
GND
Charger+
R6
1k
R5
1k
LED1
LED-TH-3mm_R
LED2
LED-TH-3mm_G
R2
2k
D3
TPD2EUSB30DRTR-TP
D+
D-
GND
DP
DN
Bat+
R8
1M
ADC
out 2.22 at 3.7V
R9
1.5M
U2
XB8089D0
VM
VM
VM
VM
EP
GND
GND
VDD
GND
VDD
Bat-
C1
0.1uF
Bat-
Bat+
R1
1k
Bat+
VDD
Charger+
BATT
1.25T-2P-WP
Q2
AO3401
Bat+
C5
0.1u
Bat-
MBR140SFT1G
D1
D2
MBR140SFT1G
LDOin
VBUS
SW2
SSSS810201
U5
UA78M33QDCYRG4Q1
IN
COMMON
COMMON
OUT
LDOin
3v3
J2
HDR-M-2.54_1x2
3v3
GND
C6
1uF
LDOin
U1
RT9080-33GJ5
VIN
GND
EN
VOUT
NC
GPS_POWER
GPS_EN
TITLE:
POwaaaaa
REV: 0.3
Company: Your Company
Sheet: 2/2
Date: 2024-10-17
Drawn By: valzzu
EasyEDA