Managing and monitoring MetroCluster configurations

Active IQ Unified Manager 9.7

NetApp
February 12, 2024

This PDF was generated from https://docs.netapp.com/us-en/active-iq-unified-manager-97/online-help/concept-parts-of-a-two-node-sas-attached-stretch-metrocluster-configuration.html on February 12, 2024. Always check docs.netapp.com for the latest.

Table of Contents

Managing and monitoring MetroCluster configurations . . . 1
Parts of a fabric MetroCluster configuration . . . 1
Cluster connectivity status definitions . . . 7
Data mirroring status definitions . . . 7
Monitoring MetroCluster configurations . . . 8
Monitoring MetroCluster replication . . . 9

Managing and monitoring MetroCluster configurations

The monitoring support for MetroCluster configurations in the Unified Manager web UI enables you to check for any connectivity issues in your MetroCluster configuration. Discovering a connectivity issue early enables you to manage your MetroCluster configurations effectively.

Parts of a fabric MetroCluster configuration

As you plan your MetroCluster configuration, you should understand the hardware components and how they interconnect.

Disaster Recovery (DR) groups

A fabric MetroCluster configuration consists of one or two DR groups, depending on the number of nodes in the MetroCluster configuration. Each DR group consists of four nodes.

- An eight-node MetroCluster configuration consists of two DR groups.
- A four-node MetroCluster configuration consists of one DR group.

The following illustration shows the organization of nodes in an eight-node MetroCluster configuration:

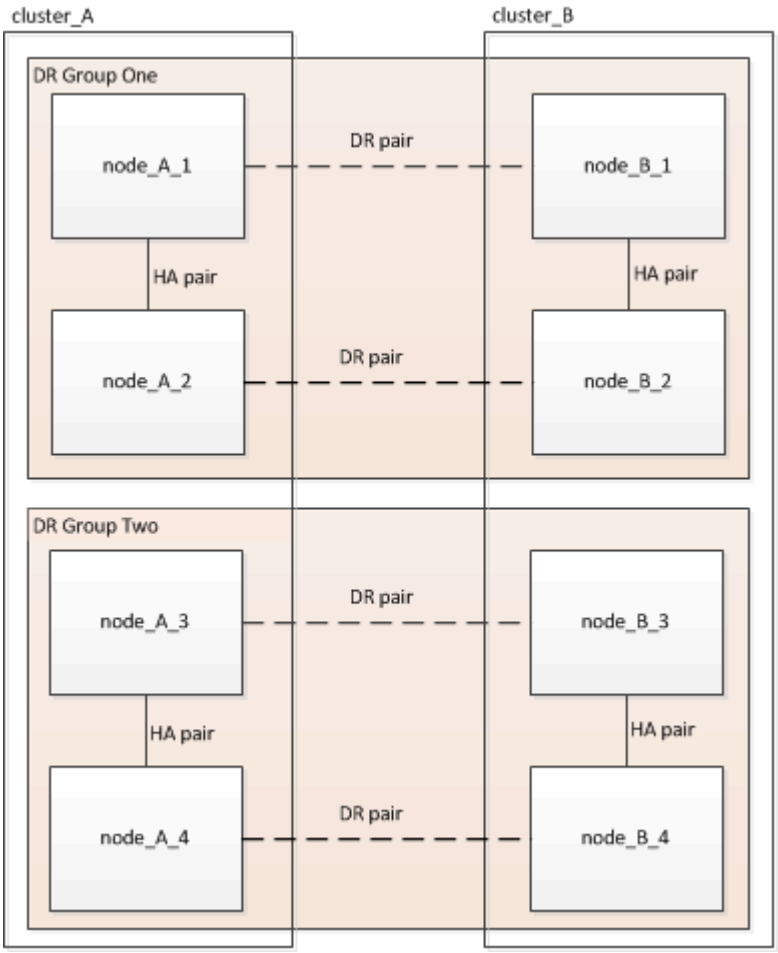

The following illustration shows the organization of nodes in a four-node MetroCluster configuration:

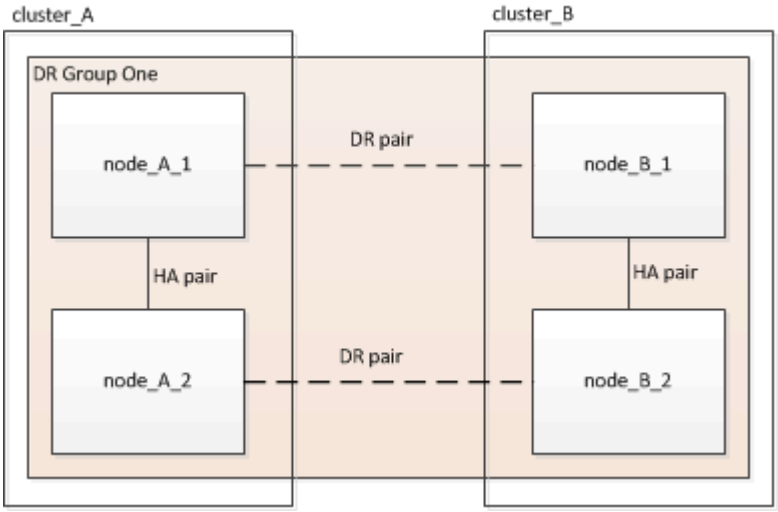

Key hardware elements

A MetroCluster configuration includes the following key hardware elements:

- Storage controllers

  The storage controllers are not connected directly to the storage but connect to two redundant FC switch fabrics.

- FC-to-SAS bridges

  The FC-to-SAS bridges connect the SAS storage stacks to the FC switches, providing bridging between the two protocols.

- FC switches

  The FC switches provide the long-haul backbone ISL between the two sites. The FC switches provide the two storage fabrics that allow data mirroring to the remote storage pools.

- Cluster peering network

  The cluster peering network provides connectivity for mirroring of the cluster configuration, which includes storage virtual machine (SVM) configuration. The configuration of all of the SVMs on one cluster is mirrored to the partner cluster.

Eight-node fabric MetroCluster configuration

An eight-node configuration consists of two clusters, one at each geographically separated site. cluster_A is located at the first MetroCluster site. cluster_B is located at the second MetroCluster site. Each site has one SAS storage stack. Additional storage stacks are supported, but only one is shown at each site. The HA pairs are configured as switchless clusters, without cluster interconnect switches. A switched configuration is supported, but is not shown.

An eight-node configuration includes the following connections:

- FC connections from each controller’s HBAs and FC-VI adapters to each of the FC switches

- An FC connection from each FC-to-SAS bridge to an FC switch
- SAS connections between each SAS shelf and from the top and bottom of each stack to an FC-to-SAS bridge
- An HA interconnect between each controller in the local HA pair

  If the controllers support a single-chassis HA pair, the HA interconnect is internal, occurring through the backplane, meaning that an external interconnect is not required.

- Ethernet connections from the controllers to the customer-provided network that is used for cluster peering

  SVM configuration is replicated over the cluster peering network.

- A cluster interconnect between each controller in the local cluster

Four-node fabric MetroCluster configuration

The following illustration shows a simplified view of a four-node fabric MetroCluster configuration. For some connections, a single line represents multiple, redundant connections between the components. Data and management network connections are not shown.

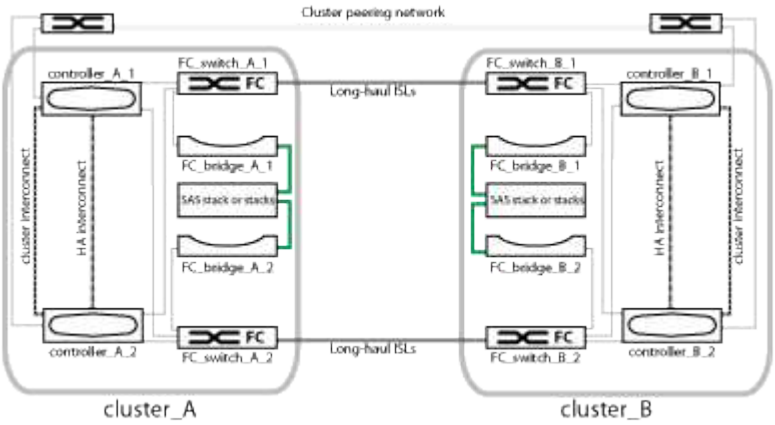

The following illustration shows a more detailed view of the connectivity in a single MetroCluster cluster (both clusters have the same configuration):

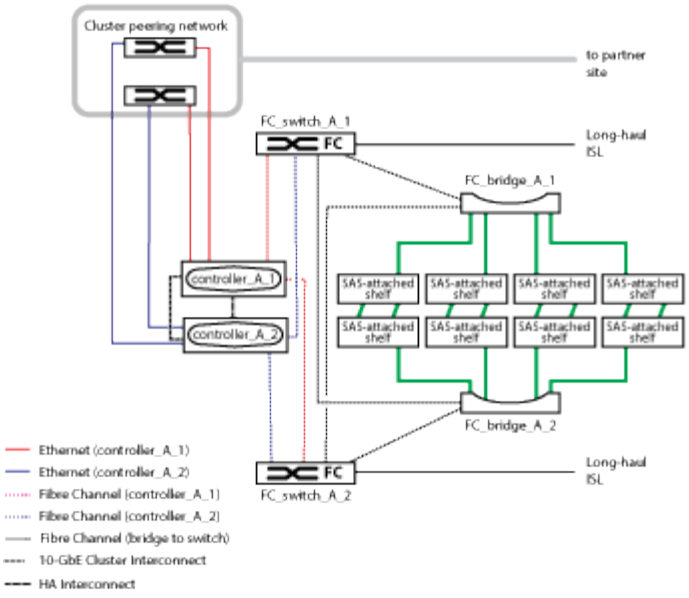

Two-node fabric MetroCluster configuration

The following illustration shows a simplified view of a two-node fabric MetroCluster configuration. For some connections, a single line represents multiple, redundant connections between the components. Data and management network connections are not shown.

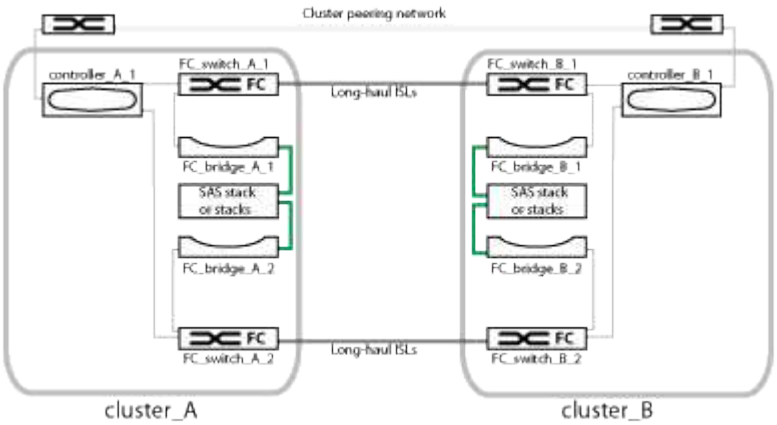

A two-node configuration consists of two clusters, one at each geographically separated site. cluster_A is located at the first MetroCluster site. cluster_B is located at the second MetroCluster site. Each site has one SAS storage stack. Additional storage stacks are supported, but only one is shown at each site.

> In a two-node configuration, the nodes are not configured as an HA pair.

The following illustration shows a more detailed view of the connectivity in a single MetroCluster cluster (both clusters have the same configuration):

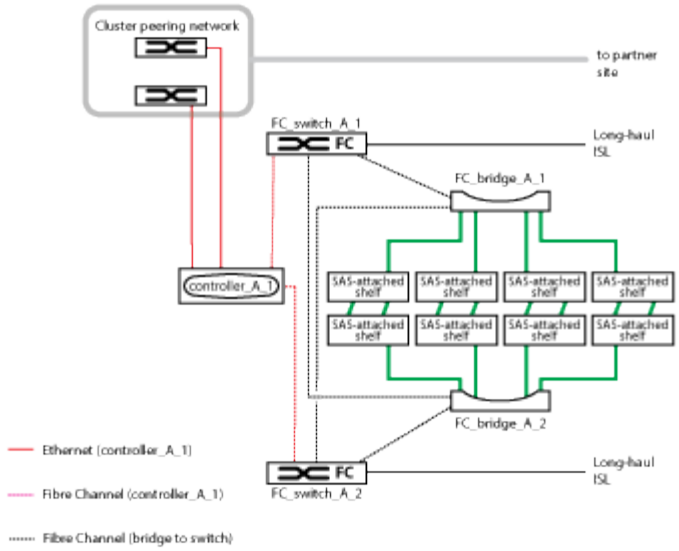

A two-node configuration includes the following connections:

- FC connections between the FC-VI adapter on each controller module
- FC connections from each controller module's HBAs to the FC-to-SAS bridge for each SAS shelf stack
- SAS connections between each SAS shelf and from the top and bottom of each stack to an FC-to-SAS bridge
- Ethernet connections from the controllers to the customer-provided network that is used for cluster peering

  SVM configuration is replicated over the cluster peering network.

Parts of a two-node SAS-attached stretch MetroCluster configuration

The two-node MetroCluster SAS-attached configuration requires a number of parts, including two single-node clusters in which the storage controllers are directly connected to the storage using SAS cables.

The MetroCluster configuration includes the following key hardware elements:

- Storage controllers

  The storage controllers connect directly to the storage using SAS cables.

  Each storage controller is configured as a DR partner to a storage controller on the partner site.

  - Copper SAS cables can be used for shorter distances.
  - Optical SAS cables can be used for longer distances.

  > In systems using E-Series array LUNs, the storage controllers can be directly connected to the E-Series storage arrays. For other array LUNs, connections via FC switches are required.

  NetApp Interoperability Matrix Tool

  In the IMT, you can use the Storage Solution field to select your MetroCluster solution. You use the

Component Explorer to select the components and ONTAP version to refine your search. You can click **Show Results** to display the list of supported configurations that match the criteria.

- Cluster peering network

  The cluster peering network provides connectivity for mirroring of the storage virtual machine (SVM) configuration. The configuration of all SVMs on one cluster is mirrored to the partner cluster.

Parts of a two-node bridge-attached stretch MetroCluster configuration

As you plan your MetroCluster configuration, you should understand the parts of the configuration and how they work together.

The MetroCluster configuration includes the following key hardware elements:

- Storage controllers

  The storage controllers are not connected directly to the storage but connected to FC-to-SAS bridges. The storage controllers are connected to each other by FC cables between each controller's FC-VI adapters.

  Each storage controller is configured as a DR partner to a storage controller on the partner site.

- FC-to-SAS bridges

  The FC-to-SAS bridges connect the SAS storage stacks to the FC initiator ports on the controllers, providing bridging between the two protocols.

- Cluster peering network

  The cluster peering network provides connectivity for mirroring of the storage virtual machine (SVM) configuration. The configuration of all SVMs on one cluster is mirrored to the partner cluster.

The following illustration shows a simplified view of the MetroCluster configuration. For some connections, a single line represents multiple, redundant connections between the components. Data and management network connections are not shown.

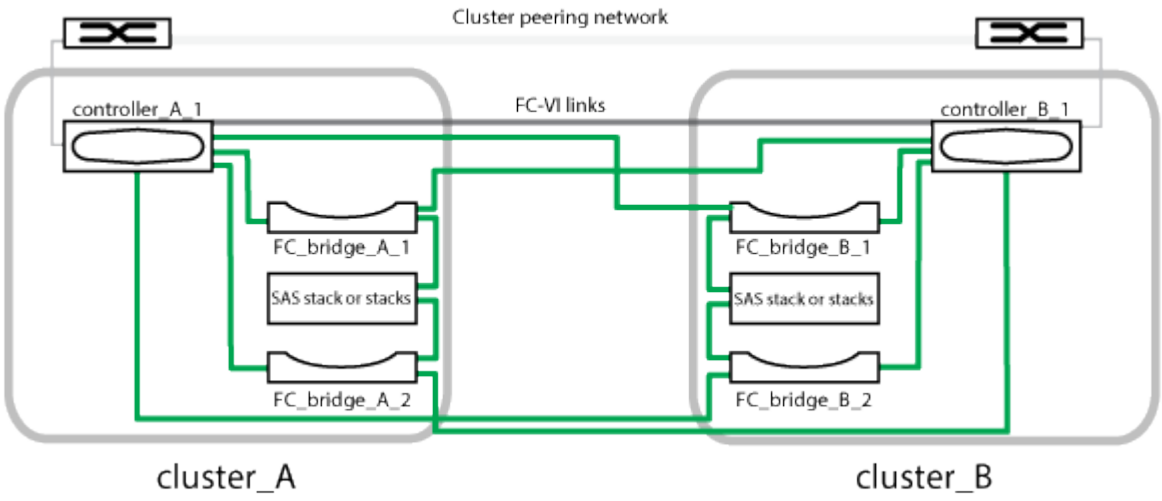

- The configuration consists of two single-node clusters.

- Each site has one or more stacks of SAS storage.

  SAS shelves in MetroCluster configurations are not supported with ACP cabling.

  Additional storage stacks are supported, but only one is shown at each site.

Cluster connectivity status definitions

Connectivity between the clusters in a MetroCluster configuration can be one of the following statuses: Optimal, Impacted, or Down. Understanding the connectivity statuses enables you to manage your MetroCluster configurations effectively.

Connectivity status	Description	Icon displayed
Optimal	Connectivity between the clusters in the MetroCluster configuration is normal.	
Impacted	One or more errors compromise the status of failover availability; however, both of the clusters in the MetroCluster configuration are still up. For example, when the ISL link is down, when the intercluster IP link is down, or when the partner cluster is not reachable.	
Down	Connectivity between the clusters in the MetroCluster configuration is down because one or both of the clusters are down or the clusters are in failover mode. For example, when the partner cluster is down because of a disaster or when there is a planned switchover for testing purposes.	Switchover with errors: Switchover successful:

Data mirroring status definitions

MetroCluster configurations provide data mirroring and the additional ability to initiate a failover if an entire site becomes unavailable. The status of data mirroring between the clusters in a MetroCluster configuration can either be Normal or Mirroring Unavailable. Understanding the status enables you to manage your MetroCluster configurations effectively.

Data mirroring status	Description	Icon displayed
Normal	Data mirroring between the clusters in the MetroCluster configuration is normal.	
Mirroring Unavailable	Data mirroring between the clusters in the MetroCluster configuration is unavailable because of switchover. For example, when the partner cluster is down because of a disaster or when there is a planned switchover for testing purposes.	Switchover with errors: Switchover successful:

Monitoring MetroCluster configurations

You can monitor connectivity issues in your MetroCluster configuration. The details include the status of the components and connectivity within a cluster and the connectivity status between the clusters in the MetroCluster configuration.

Before you begin

- Both the local and remote clusters in the MetroCluster configuration must be added to Active IQ Unified Manager.
- You must have the Operator, Application Administrator, or Storage Administrator role.

About this task

You can use the information displayed in the Cluster / Health details page to rectify any connectivity issues. For example, if the connectivity between the node and the switch in a cluster is down, the following icon is displayed:

If you move the pointer over the icon, you can view detailed information about the generated event.

Unified Manager uses system health alerts to monitor the status of the components and connectivity in the MetroCluster configuration.

The MetroCluster Connectivity tab is displayed only for clusters in a MetroCluster configuration.

Steps

1. In the left navigation pane, click **Storage** > **Clusters**.

A list of all of the monitored clusters is displayed.

2. From the **Health: All Clusters** view, click the name of the cluster for which you want to view MetroCluster configuration details.
3. In the **Cluster / Health** details page, click the **MetroCluster Connectivity** tab.

   The topology of the MetroCluster configuration is displayed in the corresponding cluster object area.

After you finish

If you discover connectivity issues in your MetroCluster configuration, you must log in to System Manager or access the ONTAP CLI to resolve the issues.

Monitoring MetroCluster replication

You can monitor and diagnose the overall health condition of the logical connections while mirroring the data. You can identify the issues or any risk that interrupts mirroring of cluster components such as aggregates, nodes, and storage virtual machines.

Before you begin

Both the local and remote cluster in the MetroCluster configuration must be added to Unified Manager

About this task

You can use the information displayed in the Cluster / Health details page to rectify any replication issues.

If you move the pointer over the icon, you can view detailed information about the generated event.

Unified Manager uses system health alerts to monitor the status of the components and connectivity in the MetroCluster configuration.

Steps

1. In the left navigation pane, click **Storage** > **Clusters**.

   A list of the monitored clusters is displayed.

2. From the **Health: All Clusters** view, click the name of the cluster for which you want to view MetroCluster replication details, and then click the **MetroCluster Replication** tab.

   The topology of the MetroCluster configuration to be replicated is displayed at the local site in the corresponding cluster object area with the information about the remote site where the data is being mirrored.

After you finish

If you discover mirroring issues in your MetroCluster configuration, you must log in to System Manager or access the ONTAP CLI to resolve the issues.

Copyright information

Copyright © 2024 NetApp, Inc. All Rights Reserved. Printed in the U.S. No part of this document covered by copyright may be reproduced in any form or by any means—graphic, electronic, or mechanical, including photocopying, recording, taping, or storage in an electronic retrieval system—without prior written permission of the copyright owner.

Software derived from copyrighted NetApp material is subject to the following license and disclaimer:

THIS SOFTWARE IS PROVIDED BY NETAPP “AS IS” AND WITHOUT ANY EXPRESS OR IMPLIED WARRANTIES, INCLUDING, BUT NOT LIMITED TO, THE IMPLIED WARRANTIES OF MERCHANTABILITY AND FITNESS FOR A PARTICULAR PURPOSE, WHICH ARE HEREBY DISCLAIMED. IN NO EVENT SHALL NETAPP BE LIABLE FOR ANY DIRECT, INDIRECT, INCIDENTAL, SPECIAL, EXEMPLARY, OR CONSEQUENTIAL DAMAGES (INCLUDING, BUT NOT LIMITED TO, PROCUREMENT OF SUBSTITUTE GOODS OR SERVICES; LOSS OF USE, DATA, OR PROFITS; OR BUSINESS INTERRUPTION) HOWEVER CAUSED AND ON ANY THEORY OF LIABILITY, WHETHER IN CONTRACT, STRICT LIABILITY, OR TORT (INCLUDING NEGLIGENCE OR OTHERWISE) ARISING IN ANY WAY OUT OF THE USE OF THIS SOFTWARE, EVEN IF ADVISED OF THE POSSIBILITY OF SUCH DAMAGE.

NetApp reserves the right to change any products described herein at any time, and without notice. NetApp assumes no responsibility or liability arising from the use of products described herein, except as expressly agreed to in writing by NetApp. The use or purchase of this product does not convey a license under any patent rights, trademark rights, or any other intellectual property rights of NetApp.

The product described in this manual may be protected by one or more U.S. patents, foreign patents, or pending applications.

LIMITED RIGHTS LEGEND: Use, duplication, or disclosure by the government is subject to restrictions as set forth in subparagraph (b)(3) of the Rights in Technical Data -Noncommercial Items at DFARS 252.227-7013 (FEB 2014) and FAR 52.227-19 (DEC 2007).

Data contained herein pertains to a commercial product and/or commercial service (as defined in FAR 2.101) and is proprietary to NetApp, Inc. All NetApp technical data and computer software provided under this Agreement is commercial in nature and developed solely at private expense. The U.S. Government has a non-exclusive, non-transferrable, nonsublicensable, worldwide, limited irrevocable license to use the Data only in connection with and in support of the U.S. Government contract under which the Data was delivered. Except as provided herein, the Data may not be used, disclosed, reproduced, modified, performed, or displayed without the prior written approval of NetApp, Inc. United States Government license rights for the Department of Defense are limited to those rights identified in DFARS clause 252.227-7015(b) (FEB 2014).

Trademark information

NETAPP, the NETAPP logo, and the marks listed at http://www.netapp.com/TM are trademarks of NetApp, Inc. Other company and product names may be trademarks of their respective owners.