Move logical interfaces (LIFs)

Active IQ Unified Manager 9.7

NetApp
February 12, 2024

This PDF was generated from https://docs.netapp.com/us-en/active-iq-unified-manager-97/online-help/task-moving-lifs-manually.html on February 12, 2024. Always check docs.netapp.com for the latest.

Table of Contents

Move logical interfaces (LIFs) . . . 1
Moving LIFs manually . . . 1
Identifying the best node for a busy LIF using ONTAP System Manager . . . 2
Changing home port and nodes for a LIF using ONTAP System Manager . . . 3
Reverting a LIF to its home port using ONTAP System Manager . . . 5

Move logical interfaces (LIFs)

Moving logical interfaces (LIFs) to a less busy port can help improve load balancing, assist with maintenance operations and performance tuning, and reduce indirect access.

Indirect access can reduce system efficiency. It occurs when a volume workload is using different nodes for network processing and data processing. To reduce indirect access, you can rearrange LIFs, which involves moving LIFs to use the same node for network processing and data processing. You can configure load balancing to have ONTAP automatically move busy LIFs to a different port or you can move a LIF manually.

Benefits
• Improve load balancing. • Reduce indirect access.
Considerations
When moving a LIF connected to CIFS shares, clients accessing the CIFS shares are disconnected. Any read or write requests to the CIFS shares are disrupted.

You use the ONTAP commands to configure load balancing. For more information, see the ONTAP networking documentation.

You use ONTAP System Manager and the ONTAP CLI commands to move LIFs manually.

Moving LIFs manually

Storage virtual machines (SVMs) contain data volumes and one or more logical interfaces (LIFs) through which the SVM provides data to the clients. You can move data LIFs from one physical port to another within the same SVM. You might want to do this to improve load balancing or assist with maintenance operations and performance tuning.

About this task

The following types of LIFs exist:

- Data LIFs: Associated with an SVM and used for communicating with clients.
- Cluster Management LIFs: Used for managing nodes, SVMs, and the cluster itself.
- Cluster LIFs: Used for intracluster traffic.
- Intercluster LIFs: Used for communication between clusters.
- Intracluster LIFs: Used for communication between HA pairs.
- SVM Management LIFs: Data LIFs associated with an SVM and used for managing that SVM.

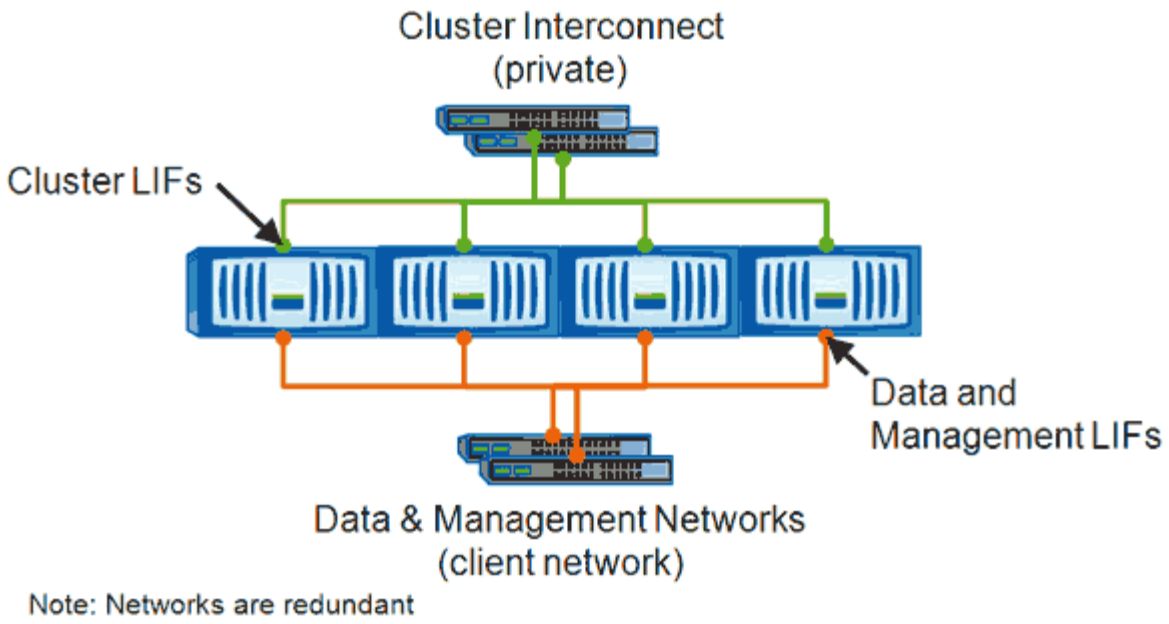

This workflow describes how to move data LIFs. This applies to NAS (NFS and CIFS) LIFs, but not to SAN (FC and iSCSI) LIFs.

> When moving a LIF connected to CIFS shares, clients accessing the CIFS shares will be disconnected. Any read or write requests to the CIFS shares will be disrupted.

> For information about how to move other types of LIFs, including details about moving LIFS connected CIFS shares, see the ONTAP networking documentation.

You can perform the following basic actions related to data LIFs:

- Display all the data LIFs.
- Identify the busiest LIFs.
- Identify the best node to accept a busy LIF.
- Modify the home port or node for a LIF to change its preferred location in the cluster.

  You should move a LIF rather than migrate a LIF for a more lasting change. To return to the original home port, you should revert the LIF.

- Migrate a data LIF to another port for a temporary change that might be used if the home port or node has a problem or is undergoing scheduled maintenance.
- Revert a data LIF to its home port.

Identifying the best node for a busy LIF using ONTAP System Manager

You can display information about all the ports in a cluster. You can view information such as the network port role (cluster, data, or node-management), link status, maximum transmission unit (MTU), speed setting and operational status, and the port's interface group, if applicable.

Steps

1. Open ONTAP System Manager.
2. From the **Home** tab, double-click the storage system.
3. In the navigation pane, expand the **Nodes** hierarchy.
4. To find the active connections on a node, in the navigation pane, select the icon for a node.
5. Click the name link of a node and then click **Configuration** > **Ports/Adapters**.
6. Note the highest client count by node.

Changing home port and nodes for a LIF using ONTAP System Manager

You can change the preferred location of a LIF by modifying its home port and home node. This is a more lasting configuration than migrating a LIF, which is typically used to temporarily relocate a LIF to a different node during scheduled maintenance.

About this task

The following image shows the original LIF home port and node and the home port and node after the change. The original LIF1 home port was changed from e1a to e3a and LIF2 was changed from e4a to e2a.

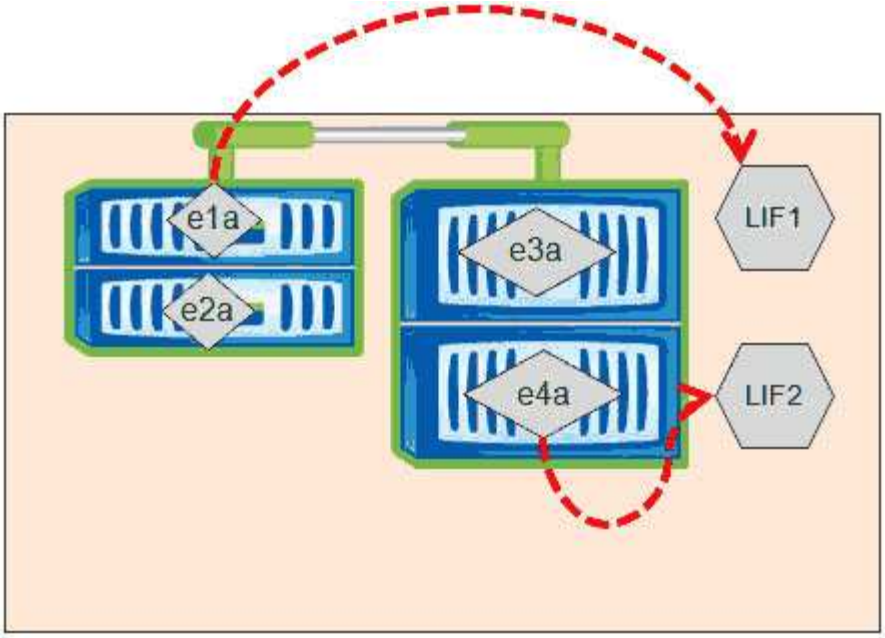

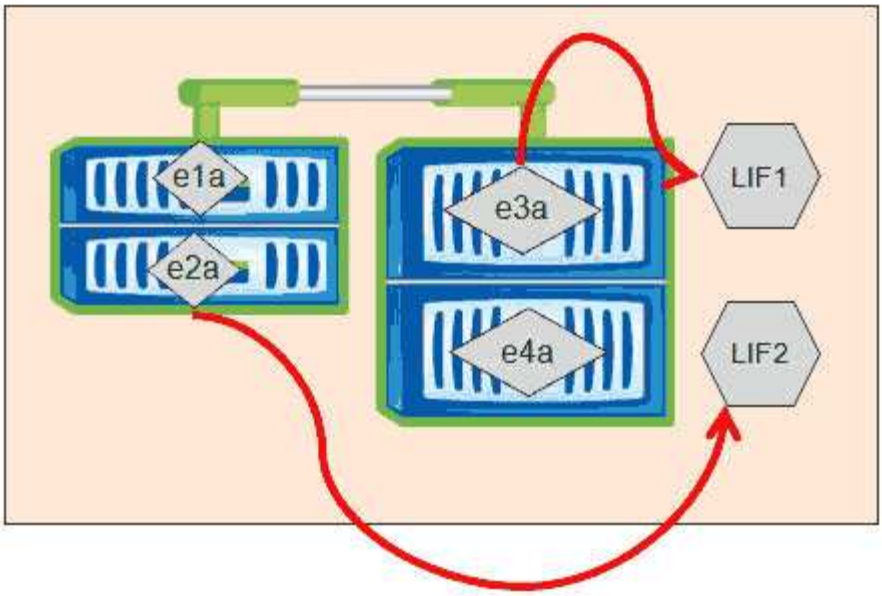

Steps

1. Open ONTAP System Manager.
2. From the **Home** tab, double-click the storage system.
3. In the navigation pane, expand the **SVMs** hierarchy.
4. In the navigation pane, select the SVMs and click **Configuration** > **Network Interfaces**.
5. Select the LIF and click **Edit**.
6. In the**Edit Interface** dialog box, enter the home port and network address of the target port.

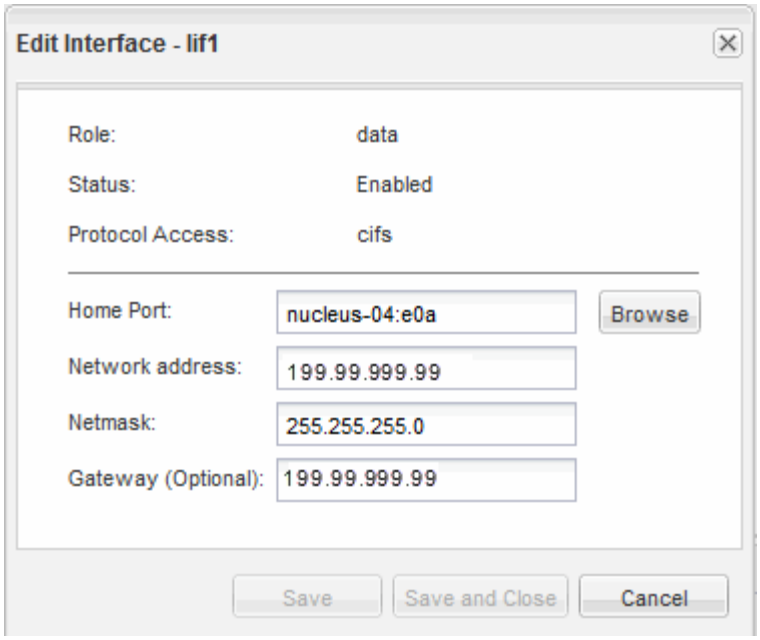

In ONTAP 8.2.1, the Home Port field is disabled.

7. Click **Save and Close**.

Reverting a LIF to its home port using ONTAP System Manager

You can revert a LIF from its current port to its home port after it fails over or is migrated to a different port either manually or automatically. You can do this using ONTAP System Manager.

About this task

When creating a LIF, the administrator specifies a home port and home node to use as the preferred location of the LIF. If the home node is unavailable or the home port experiences a physical link outage, the LIF is automatically migrated to a new location. The new location is reported, in ONTAP System Manager for example, as the current port for the LIF. Unless the automatic revert option is enabled, the LIF will remain at this new location until it is reverted.

Steps

1. Open ONTAP System Manager.
2. From the **Home** tab, double-click the storage system.
3. In the navigation pane, expand the **Storage Virtual Machines** hierarchy.
4. In the navigation pane, select the SVM and click **Configuration** > **Network Interfaces**.
5. Look for data LIFs that display a house icon with a red cross mark, in the **Current Port** column, as in the following image.

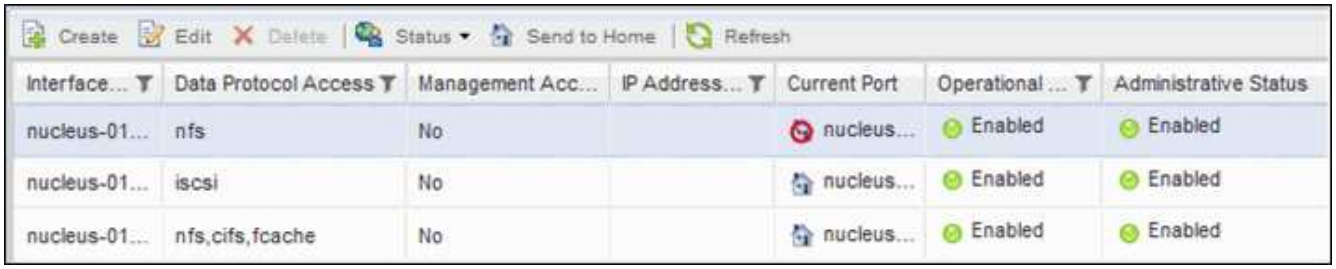

6. Select the LIF and click **Send to Home**.

   This option is enabled only when the selected interface is hosted on a non-home port and when the home port is available.

Copyright information

Copyright © 2024 NetApp, Inc. All Rights Reserved. Printed in the U.S. No part of this document covered by copyright may be reproduced in any form or by any means—graphic, electronic, or mechanical, including photocopying, recording, taping, or storage in an electronic retrieval system—without prior written permission of the copyright owner.

Software derived from copyrighted NetApp material is subject to the following license and disclaimer:

THIS SOFTWARE IS PROVIDED BY NETAPP “AS IS” AND WITHOUT ANY EXPRESS OR IMPLIED WARRANTIES, INCLUDING, BUT NOT LIMITED TO, THE IMPLIED WARRANTIES OF MERCHANTABILITY AND FITNESS FOR A PARTICULAR PURPOSE, WHICH ARE HEREBY DISCLAIMED. IN NO EVENT SHALL NETAPP BE LIABLE FOR ANY DIRECT, INDIRECT, INCIDENTAL, SPECIAL, EXEMPLARY, OR CONSEQUENTIAL DAMAGES (INCLUDING, BUT NOT LIMITED TO, PROCUREMENT OF SUBSTITUTE GOODS OR SERVICES; LOSS OF USE, DATA, OR PROFITS; OR BUSINESS INTERRUPTION) HOWEVER CAUSED AND ON ANY THEORY OF LIABILITY, WHETHER IN CONTRACT, STRICT LIABILITY, OR TORT (INCLUDING NEGLIGENCE OR OTHERWISE) ARISING IN ANY WAY OUT OF THE USE OF THIS SOFTWARE, EVEN IF ADVISED OF THE POSSIBILITY OF SUCH DAMAGE.

NetApp reserves the right to change any products described herein at any time, and without notice. NetApp assumes no responsibility or liability arising from the use of products described herein, except as expressly agreed to in writing by NetApp. The use or purchase of this product does not convey a license under any patent rights, trademark rights, or any other intellectual property rights of NetApp.

The product described in this manual may be protected by one or more U.S. patents, foreign patents, or pending applications.

LIMITED RIGHTS LEGEND: Use, duplication, or disclosure by the government is subject to restrictions as set forth in subparagraph (b)(3) of the Rights in Technical Data -Noncommercial Items at DFARS 252.227-7013 (FEB 2014) and FAR 52.227-19 (DEC 2007).

Data contained herein pertains to a commercial product and/or commercial service (as defined in FAR 2.101) and is proprietary to NetApp, Inc. All NetApp technical data and computer software provided under this Agreement is commercial in nature and developed solely at private expense. The U.S. Government has a non-exclusive, non-transferrable, nonsublicensable, worldwide, limited irrevocable license to use the Data only in connection with and in support of the U.S. Government contract under which the Data was delivered. Except as provided herein, the Data may not be used, disclosed, reproduced, modified, performed, or displayed without the prior written approval of NetApp, Inc. United States Government license rights for the Department of Defense are limited to those rights identified in DFARS clause 252.227-7015(b) (FEB 2014).

Trademark information

NETAPP, the NETAPP logo, and the marks listed at http://www.netapp.com/TM are trademarks of NetApp, Inc. Other company and product names may be trademarks of their respective owners.