iSCSI Setup

E-Series Systems

NetApp
March 22, 2024

This PDF was generated from https://docs.netapp.com/us-en/e-series/config-linux/iscsi-verify-linux-config-support-task.html on March 22, 2024. Always check docs.netapp.com for the latest.

Table of Contents

iSCSI Setup . . . 1
- Verify the Linux configuration is supported . . . 1
- Configure IP addresses using DHCP . . . 1
- Install and configure Linux Unified Host Utilities . . . 2
- Install SANtricity Storage Manager for SMcli (SANtricity software version 11.53 or earlier) . . . 2
- Access SANtricity System Manager and use the Setup wizard . . . 4
- Configure the multipath software . . . 5
- Set up the multipath.conf file . . . 6
- Configure the switches . . . 6
- Configure networking . . . 7
- Configure array-side networking . . . 7
- Configure host-side networking . . . 9
- Verify IP network connections . . . 13
- Create partitions and filesystems . . . 14
- Verify storage access on the host . . . 16
- Record your iSCSI configuration . . . 16

iSCSI Setup

Verify the Linux configuration is supported

To ensure reliable operation, you create an implementation plan and then use the NetApp Interoperability Matrix Tool (IMT) to verify that the entire configuration is supported.

Steps

1. Go to the NetApp Interoperability Matrix Tool.
2. Click on the **Solution Search** tile.
3. In the **Protocols › SAN Host** area, click the **Add** button next to **E-Series SAN Host**.
4. Click **View Refine Search Criteria**.

   The Refine Search Criteria section is displayed. In this section you may select the protocol that applies, as well as other criteria for the configuration such as Operating System, NetApp OS, and Host Multipath driver.

5. Select the criteria you know you want for your configuration, and then see what compatible configuration elements apply.
6. As necessary, make the updates for your operating system and protocol that are prescribed in the tool.

   Detailed information for your chosen configuration is accessible on the View Supported Configurations page by clicking the right page arrow.

Configure IP addresses using DHCP

To configure communications between the management station and the storage array, use Dynamic Host Configuration Protocol (DHCP) to provide IP addresses.

Before you begin

Make sure you have the following:

- A DHCP server installed and configured on the same subnet as the storage management ports.

About this task

Each storage array has either one controller (simplex) or two controllers (duplex), and each controller has two storage management ports. Each management port will be assigned an IP address.

The following instructions refer to a storage array with two controllers (a duplex configuration).

Steps

1. If you have not already done so, connect an Ethernet cable to the management station and to management port 1 on each controller (A and B).

   The DHCP server assigns an IP address to port 1 of each controller.

   > Do not use management port 2 on either controller. Port 2 is reserved for use by NetApp technical personnel.

> If you disconnect and reconnect the Ethernet cable, or if the storage array is power-cycled, DHCP assigns IP addresses again. This process occurs until static IP addresses are configured. It is recommended that you avoid disconnecting the cable or power-cycling the array.

If the storage array cannot get DHCP-assigned IP addresses within 30 seconds, the following default IP addresses are set:

- Controller A, port 1: 169.254.128.101
- Controller B, port 1: 169.254.128.102
- Subnet mask: 255.255.0.0

2. Locate the MAC address label on the back of each controller, and then provide your network administrator with the MAC address for port 1 of each controller.

   Your network administrator needs the MAC addresses to determine the IP address for each controller. You will need the IP addresses to connect to your storage system through your browser.

Install and configure Linux Unified Host Utilities

The Linux Unified Host Utilities tools help you manage NetApp storage, including failover policies and physical paths.

Steps

1. Use the NetApp Interoperability Matrix Tool to determine the appropriate version of Unified Host Utilities to install.

   The versions are listed in a column within each supported configuration.

2. Download the Unified Host Utilities from NetApp Support.

> Alternatively, you can use the SANtricity SMdevices utility to perform the same functions as the Unified Host Utility tool. The SMdevices utility is included as part of the SMutils package. The SMutils package is a collection of utilities to verify what the host sees from the storage array. It is included as part of the SANtricity software installation.

Install SANtricity Storage Manager for SMcli (SANtricity software version 11.53 or earlier)

If you are using SANtricity software 11.53 or earlier, you can install the SANtricity Storage Manager software on your management station to help manage the array.

SANtricity Storage Manager includes the command line interface (CLI) for additional management tasks, and also the Host Context Agent for pushing host configuration information to the storage array controllers through the I/O path.

> If you are using SANtricity software 11.60 and newer, you do not need to follow these steps. The SANtricity Secure CLI (SMcli) is included in the SANtricity OS and downloadable through the SANtricity System Manager. For more information on how to download the SMcli through the SANtricity System Manager, refer to the *Download command line interface (CLI)* topic under the SANtricity System Manager Online Help.

Before you begin

Make sure you have the following:

- SANtricity software 11.53 or earlier.
- Correct administrator or superuser privileges.
- A system for the SANtricity Storage Manager client with the following minimum requirements:
  - **RAM**: 2 GB for Java Runtime Engine
  - **Disk space**: 5 GB
  - **OS/Architecture**: For guidance on determining the supported operating system versions and architectures, go to NetApp Support. From the **Downloads** tab, go to **Downloads › E-Series SANtricity Storage Manager**.

About this task

This task describes how to install SANtricity Storage Manager on both the Windows and Linux OS platforms, because both Windows and Linux are common management station platforms when Linux is used for the data host.

Steps

1. Download the SANtricity software release at NetApp Support. From the **Downloads** tab, go to **Downloads › E-Series SANtricity Storage Manager**.
2. Run the SANtricity installer.

Windows	Linux
Double-click the SMIA*.exe installation package to start the installation.	a. Go to the directory where the SMIA*.bin installation package is located. b. If the temp mount point does not have execute permissions, set the `IATEMPDIR` variable. Example: `IATEMPDIR=/root ./SMIA-LINUXX64-11.25.0A00.0002.bin` c. Run the `chmod +x SMIA*.bin` command to grant execute permission to the file. d. Run the `./SMIA*.bin` command to start the installer.

3. Use the installation wizard to install the software on the management station.

Access SANtricity System Manager and use the Setup wizard

To configure your storage array, you can use the Setup wizard in SANtricity System Manager.

SANtricity System Manager is a web-based interface embedded on each controller. To access the user interface, you point a browser to the controller's IP address. A setup wizard helps you get started with system configuration.

Before you begin

Make sure you have the following:

- Out-of-band management.
- A management station for accessing SANtricity System Manager that includes one of the following browsers:

Browser	Minimum version
Google Chrome	89
Microsoft Edge	90
Mozilla Firefox	80
Safari	14

About this task

If you are an iSCSI user, you closed the Setup wizard while configuring iSCSI.

The wizard automatically relaunches when you open System Manager or refresh your browser and *at least one* of the following conditions is met:

- No pools and volume groups are detected.
- No workloads are detected.
- No notifications are configured.

Steps

1. From your browser, enter the following URL: `https://<DomainNameOrIPAddress>`

   `IPAddress` is the address for one of the storage array controllers.

   The first time SANtricity System Manager is opened on an array that has not been configured, the Set Administrator Password prompt appears. Role-based access management configures four local roles: admin, support, security, and monitor. The latter three roles have random passwords that cannot be guessed. After you set a password for the admin role, you can change all of the passwords using the admin credentials. For more information about the four local user roles, see the online help available in the SANtricity System Manager user interface.

2. Enter the System Manager password for the admin role in the Set Administrator Password and Confirm Password fields, and then click **Set Password**.

   The Setup wizard launches if there are no pools, volumes groups, workloads, or notifications configured.

3. Use the Setup wizard to perform the following tasks:
   - **Verify hardware (controllers and drives)** — Verify the number of controllers and drives in the storage array. Assign a name to the array.
   - **Verify hosts and operating systems** — Verify the host and operating system types that the storage array can access.
   - **Accept pools** — Accept the recommended pool configuration for the express installation method. A pool is a logical group of drives.
   - **Configure alerts** — Allow System Manager to receive automatic notifications when a problem occurs with the storage array.
   - **Enable AutoSupport** — Automatically monitor the health of your storage array and have dispatches sent to technical support.
4. If you have not already created a volume, create one by going to **Storage › Volumes › Create › Volume**.

   For more information, see the online help for SANtricity System Manager.

Configure the multipath software

To provide a redundant path to the storage array, you can configure multipath software.

Before you begin

You must install the required packages on your system.

- For Red Hat (RHEL) hosts, verify the packages are installed by running `rpm -q device-mapper-multipath`.
- For SLES hosts, verify the packages are installed by running `rpm -q multipath-tools`.

If you have not already installed the operating system, use the media supplied by your operating system vendor.

About this task

Multipath software provides a redundant path to the storage array in case one of the physical paths is disrupted. The multipath software presents the operating system with a single virtual device that represents the active physical paths to the storage. The multipath software also manages the failover process that updates the virtual device.

You use the device mapper multipath (DM-MP) tool for Linux installations. By default, DM-MP is disabled in RHEL and SLES. Complete the following steps to enable DM-MP components on the host.

Steps

1. If a multipath.conf file is not already created, run the `# touch /etc/multipath.conf` command.
2. Use the default multipath settings by leaving the multipath.conf file blank.
3. Start the multipath service.

```
# systemctl start multipathd
```

4. Save your kernel version by running the `uname -r` command.

```
# uname -r
3.10.0-327.el7.x86_64
```

You will use this information when you assign volumes to the host.

5. Enable the `multipathd` daemon on boot.

```
systemctl enable multipathd
```

6. Rebuild the `initramfs` image or the `initrd` image under /boot directory:

```
dracut --force --add multipath
```

7. Use the Create host manually procedure in the online help to check whether the hosts are defined. Verify that each host type setting is based on the kernel information gathered in step 4.

> Automatic Load Balancing is disabled for any volumes mapped to hosts running kernel 3.9 or earlier.

8. Reboot the host.

Set up the multipath.conf file

The multipath.conf file is the configuration file for the multipath daemon, multipathd.

The multipath.conf file overrides the built-in configuration table for multipathd.

> For SANtricity operating system 8.30 and newer, NetApp recommends using the default settings as provided.

No changes to /etc/multipath.conf are required.

Configure the switches

You configure the switches according to the vendor's recommendations for iSCSI. These recommendations might include both configuration directives as well as code updates.

You must ensure the following:

- You have two separate networks for high availability. Make sure that you isolate your iSCSI traffic to

separate network segments.

- You must enable flow control **end to end**.
- If appropriate, you have enabled jumbo frames.

> Port channels/LACP is not supported on the controller's switch ports. Host-side LACP is not recommended; multipathing provides the same benefits, and in some cases, better benefits.

Configure networking

You can set up your iSCSI network in many ways, depending on your data storage requirements.

Consult your network administrator for tips on selecting the best configuration for your environment.

To configure an iSCSI network with basic redundancy, connect each host port and one port from each controller to separate switches, and partition each set of host ports and controller ports on separate network segments or VLANs.

You must enable send and receive hardware flow control **end to end**. You must disable priority flow control.

If you are using jumbo frames within the IP SAN for performance reasons, make sure to configure the array, switches, and hosts to use jumbo frames. Consult your operating system and switch documentation for information on how to enable jumbo frames on the hosts and on the switches. To enable jumbo frames on the array, complete the steps in Configure array-side networking.

> Many network switches must be configured above 9,000 bytes for IP overhead. Consult your switch documentation for more information.

Configure array-side networking

You use the SANtricity System Manager GUI to configure iSCSI networking on the array side.

Before you begin

Make sure you have the following:

- The IP address or domain name for one of the storage array controllers.
- A password for the System Manager GUI, or Role-Based Access Control (RBAC) or LDAP and a directory service configured for the appropriate security access to the storage array. See the SANtricity System Manager online help for more information about Access Management.

About this task

This task describes how to access the iSCSI port configuration from System Manager's Hardware page. You can also access the configuration from **System › Settings › Configure iSCSI ports**.

Steps

1. From your browser, enter the following URL: `https://<DomainNameOrIPAddress>`

   `IPAddress` is the address for one of the storage array controllers.

The first time SANtricity System Manager is opened on an array that has not been configured, the Set Administrator Password prompt appears. Role-based access management configures four local roles: admin, support, security, and monitor. The latter three roles have random passwords that cannot be guessed. After you set a password for the admin role, you can change all of the passwords using the admin credentials. For more information about the four local user roles, see the online help available in the SANtricity System Manager user interface.

2. Enter the System Manager password for the admin role in the Set Administrator Password and Confirm Password fields, and then click **Set Password**.

   The Setup wizard launches if there are no pools, volumes groups, workloads, or notifications configured.

3. Close the Setup wizard.

   You will use the wizard later to complete additional setup tasks.

4. Select **Hardware**.
5. If the graphic shows the drives, click **Show back of shelf**.

   The graphic changes to show the controllers instead of the drives.

6. Click the controller with the iSCSI ports you want to configure.

   The controller's context menu appears.

7. Select **Configure iSCSI ports**.

   The Configure iSCSI Ports dialog box opens.

8. In the drop-down list, select the port you want to configure, and then click **Next**.
9. Select the configuration port settings, and then click **Next**.

   To see all port settings, click the **Show more port settings** link on the right of the dialog box.

Port Setting	Description
Configured ethernet port speed	Select the desired speed. The options that appear in the drop-down list depend on the maximum speed that your network can support (for example, 10 Gbps). The optional 25Gb iSCSI host interface cards available on the controllers do not auto-negotiate speeds. You must set the speed for each port to either 10 Gb or 25 Gb. All ports must be set to the same speed.
Enable IPv4 / Enable IPv6	Select one or both options to enable support for IPv4 and IPv6 networks.

Port Setting	Description
TCP listening port (Available by clicking **Show more port settings**.)	If necessary, enter a new port number. The listening port is the TCP port number that the controller uses to listen for iSCSI logins from host iSCSI initiators. The default listening port is 3260. You must enter 3260 or a value between 49152 and 65535.
MTU size (Available by clicking **Show more port settings**.)	If necessary, enter a new size in bytes for the Maximum Transmission Unit (MTU). The default Maximum Transmission Unit (MTU) size is 1500 bytes per frame. You must enter a value between 1500 and 9000.
Enable ICMP PING responses	Select this option to enable the Internet Control Message Protocol (ICMP). The operating systems of networked computers use this protocol to send messages. These ICMP messages determine whether a host is reachable and how long it takes to get packets to and from that host.

If you selected **Enable IPv4**, a dialog box opens for selecting IPv4 settings after you click **Next**. If you selected **Enable IPv6**, a dialog box opens for selecting IPv6 settings after you click **Next**. If you selected both options, the dialog box for IPv4 settings opens first, and then after you click **Next**, the dialog box for IPv6 settings opens.

10. Configure the IPv4 and/or IPv6 settings, either automatically or manually. To see all port settings, click the **Show more settings** link on the right of the dialog box.

Port setting	Description
Automatically obtain configuration	Select this option to obtain the configuration automatically.
Manually specify static configuration	Select this option, and then enter a static address in the fields. For IPv4, include the network subnet mask and gateway. For IPv6, include the routable IP address and router IP address.

11. Click **Finish**.
12. Close System Manager.

Configure host-side networking

To configure host-side networking, you must perform several steps.

About this task

You configure iSCSI networking on the host side by setting the number of node sessions per physical path, turning on the appropriate iSCSI services, configuring the network for the iSCSI ports, creating iSCSI face bindings, and establishing the iSCSI sessions between initiators and targets.

In most cases, you can use the inbox software-initiator for iSCSI CNA/NIC. You do not need to download the latest driver, firmware, and BIOS. Refer to the NetApp Interoperability Matrix Tool to determine code requirements.

Steps

1. Check the `node.session.nr_sessions` variable in the /etc/iscsi/iscsid.conf file to see the default number of sessions per physical path. If necessary, change the default number of sessions to one session.

```
node.session.nr_sessions = 1
```

2. Change the `node.session.timeo.replacement_timeout` variable in the /etc/iscsi/iscsid.conf file to `20`, from a default value of `120`.

```
node.session.timeo.replacement_timeout = 20
```

3. Optionally, you can set `node.startup = automatic` in /etc/iscsi/iscsid.conf before running any `iscsiadm` commands to have sessions persist after reboot.
4. Make sure `iscsid` and `(open-)iscsi` services are on and enabled for boot.

```
# systemctl start iscsi
# systemctl start iscsid
# systemctl enable iscsi
# systemctl enable iscsid
```

5. Get the host IQN initiator name, which will be used to configure the host to an array.

```
# cat /etc/iscsi/initiatorname.iscsi
```

6. Configure the network for iSCSI ports. These are example instructions for RHEL and SLES:

> In addition to the public network port, iSCSI initiators should use two or more NICs on separate private segments or vLANs.

   a. Determine the iSCSI port names using the `ifconfig -a` command.
   b. Set the IP address for the iSCSI initiator ports. The initiator ports should be present on the same subnet as the iSCSI target ports.

      Red Hat Enterprise Linux 7 and 8 (RHEL 7 and RHEL 8)

      Create the example file `/etc/sysconfig/network-scripts/ifcfg-<NIC port>` with the following contents.

```
TYPE=Ethernet
PROXY_METHOD=none
BROWSER_ONLY=no
BOOTPROTO=static
DEFROUTE=yes
IPV4_FAILURE_FATAL=no
NAME=<NIC port>
UUID=<unique UUID>
DEVICE=<NIC port>
ONBOOT=yes
IPADDR=192.168.xxx.xxx
PREFIX=24
NETMASK=255.255.255.0
NM_CONTROLLED=no
MTU=
```

Optional additions with regards to IPv6:

```
IPV6INIT=yes
IPV6_AUTOCONF=no
IPV6ADDR=fdxx::192:168:xxxx:xxxx/32
IPV6_DEFROUTE=yes
IPV6_FAILURE_FATAL=no
IPV6_ADDR_GEN_MODE=eui64
```

Red Hat Enterprise Linux 9 (RHEL 9)

Use the `nmtui` tool to activate and edit a connection. The tool will generate a `<NIC port>.nmconnection` file within `/etc/NetworkManager/system-connections/`.

SUSE Linux Enterprise Server 12 and 15 (SLES 12 and SLES 15)

Create the example file `/etc/sysconfig/network/ifcfg-<NIC port>` with the following contents.

```
IPADDR='192.168.xxx.xxx/24'
BOOTPROTO='static'
STARTMODE='auto'
```

Optional addition with regards to IPv6:

```
IPADDR_0='fdxx::192:168:xxxx:xxxx/32'
```

Be sure to set the address for both iSCSI initiator ports.

c. Restart network services.

```
# systemctl restart network
```

d. Make sure the Linux server can ping *all* of the iSCSI target ports.

7. Establish the iSCSI sessions between initiators and targets (four total) by one of two methods.

a. (Optional) When using ifaces, configure the iSCSI interfaces by creating two iSCSI iface bindings.

```
# iscsiadm -m iface -I iface0 -o new
# iscsiadm -m iface -I iface0 -o update -n iface.net_ifacename -v
<NIC port1>
```

```
# iscsiadm -m iface -I iface1 -o new
# iscsiadm -m iface -I iface1 -o update -n iface.net_ifacename -v
<NIC port2>
```

To list the interfaces, use `iscsiadm -m iface`.

b. Discover iSCSI targets. Save the IQN (it will be the same with each discovery) in the worksheet for the next step.

Method 1 (with ifaces)

```
# iscsiadm -m discovery -t sendtargets -p
<target_ip_address>:<target_tcp_listening_port> -I iface0
# iscsiadm -m discovery -t sendtargets -p 192.168.0.1:3260 -I iface0
```

Method 2 (without ifaces)

```
# iscsiadm -m discovery -t sendtargets -p
<target_ip_address>:<target_tcp_listening_port>
# iscsiadm -m discovery -t sendtargets -p 192.168.0.1:3260
```

The IQN looks like the following:

```
iqn.1992-01.com.netapp:2365.60080e50001bf1600000000531d7be3
```

c. Create the connection between the iSCSI initiators and iSCSI targets.

Method 1 (with ifaces)

```
# iscsiadm -m node -T <target_iqn> -p
<target_ip_address>:<target_tcp_listening_port> -I iface0 -l
# iscsiadm -m node -T iqn.1992-
01.com.netapp:2365.60080e50001bf1600000000531d7be3 -p
192.168.0.1:3260 -I iface0 -l
```

Method 2 (without ifaces)

```
# iscsiadm -m node -L all
```

d. List the iSCSI sessions established on the host.

```
# iscsiadm -m session
```

Verify IP network connections

You verify Internet Protocol (IP) network connections by using ping tests to ensure the host and array are able to communicate.

Steps

1. On the host, run one of the following commands, depending on whether jumbo frames are enabled:
   - If jumbo frames are not enabled, run this command:

     ```
     ping -I <hostIP\> <targetIP\>
     ```

   - If jumbo frames are enabled, run the ping command with a payload size of 8,972 bytes. The IP and ICMP combined headers are 28 bytes, which when added to the payload, equals 9,000 bytes. The -s switch sets the `packet size` bit. The -d switch sets the debug option. These options allow jumbo frames of 9,000 bytes to be successfully transmitted between the iSCSI initiator and the target.

     ```
     ping -I <hostIP\> -s 8972 -d <targetIP\>
     ```

     In this example, the iSCSI target IP address is `192.0.2.8`.

```
#ping -I 192.0.2.100 -s 8972 -d 192.0.2.8
Pinging 192.0.2.8 with 8972 bytes of data:
Reply from 192.0.2.8: bytes=8972 time=2ms TTL=64
Reply from 192.0.2.8: bytes=8972 time=2ms TTL=64
Reply from 192.0.2.8: bytes=8972 time=2ms TTL=64
Reply from 192.0.2.8: bytes=8972 time=2ms TTL=64
Ping statistics for 192.0.2.8:
  Packets: Sent = 4, Received = 4, Lost = 0 (0% loss),
Approximate round trip times in milli-seconds:
  Minimum = 2ms, Maximum = 2ms, Average = 2ms
```

2. Issue a `ping` command from each host's initiator address (the IP address of the host Ethernet port used for iSCSI) to each controller iSCSI port. Perform this action from each host server in the configuration, changing the IP addresses as necessary.

> If the command fails (for example, returns `Packet needs to be fragmented but DF set`), verify the MTU size (jumbo frame support) for the Ethernet interfaces on the host server, storage controller, and switch ports.

Create partitions and filesystems

Because a new LUN has no partition or file system when the Linux host first discovers it, you must format the LUN before it can be used. Optionally, you can create a file system on the LUN.

Before you begin

Make sure you have the following:

- A LUN that is discovered by the host.
- A list of available disks. (To see available disks, run the `ls` command in the /dev/mapper folder.)

About this task

You can initialize the disk as a basic disk with a GUID partition table (GPT) or Master boot record (MBR).

Format the LUN with a file system such as ext4. Some applications do not require this step.

Steps

1. Retrieve the SCSI ID of the mapped disk by issuing the `sanlun lun show -p` command.

   The SCSI ID is a 33-character string of hexadecimal digits, beginning with the number 3. If user-friendly names are enabled, Device Mapper reports disks as mpath instead of by a SCSI ID.

```
# sanlun lun show -p

                E-Series Array: ictm1619s01c01-
SRP(60080e50002908b40000000054efb9d2)
                   Volume Name:
               Preferred Owner: Controller in Slot B
                 Current Owner: Controller in Slot B
                          Mode: RDAC (Active/Active)
                       UTM LUN: None
                           LUN: 116
                      LUN Size:
                       Product: E-Series
                   Host Device:
mpathr(360080e50004300ac000007575568851d)
              Multipath Policy: round-robin 0
            Multipath Provider: Native
--------- ---------- ------- ------------
-----------------------------------------------
host      controller                      controller
path      path       /dev/   host         target
state     type       node    adapter      port
--------- ---------- ------- ------------
-----------------------------------------------
up        secondary  sdcx    host14       A1
up        secondary  sdat    host10       A2
up        secondary  sdbv    host13       B1
```

2. Create a new partition according to the method appropriate for your Linux OS release.

   Typically, characters identifying the partition of a disk are appended to the SCSI ID (the number 1 or p3 for instance).

```
# parted -a optimal -s -- /dev/mapper/360080e5000321bb8000092b1535f887a
mklabel
gpt mkpart primary ext4 0% 100%
```

3. Create a file system on the partition.

   The method for creating a file system varies depending on the file system chosen.

```
# mkfs.ext4 /dev/mapper/360080e5000321bb8000092b1535f887a1
```

4. Create a folder to mount the new partition.

```
# mkdir /mnt/ext4
```

5. Mount the partition.

```
# mount /dev/mapper/360080e5000321bb8000092b1535f887a1 /mnt/ext4
```

Verify storage access on the host

Before using the volume, you verify that the host can write data to the volume and read it back.

Before you begin

Make sure you have the following:

- An initialized volume that is formatted with a file system.

Steps

1. On the host, copy one or more files to the mount point of the disk.
2. Copy the files back to a different folder on the original disk.
3. Run the `diff` command to compare the copied files to the originals.

After you finish

Remove the file and folder that you copied.

Record your iSCSI configuration

You can generate and print a PDF of this page, and then use the following worksheet to record iSCSI storage configuration information. You need this information to perform provisioning tasks.

Recommended configuration

Recommended configurations consist of two initiator ports and four target ports with one or more VLANs.

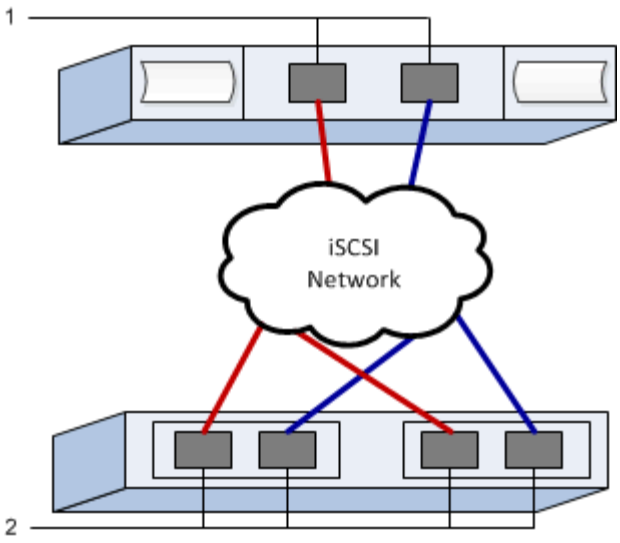

Target IQN

Callout No.	Target port connection	IQN
2	Target port	

Mapping host name

Callout No.	Host information	Name and type
1	Mapping host name	
	Host OS type	

Copyright information

Copyright © 2024 NetApp, Inc. All Rights Reserved. Printed in the U.S. No part of this document covered by copyright may be reproduced in any form or by any means—graphic, electronic, or mechanical, including photocopying, recording, taping, or storage in an electronic retrieval system—without prior written permission of the copyright owner.

Software derived from copyrighted NetApp material is subject to the following license and disclaimer:

THIS SOFTWARE IS PROVIDED BY NETAPP “AS IS” AND WITHOUT ANY EXPRESS OR IMPLIED WARRANTIES, INCLUDING, BUT NOT LIMITED TO, THE IMPLIED WARRANTIES OF MERCHANTABILITY AND FITNESS FOR A PARTICULAR PURPOSE, WHICH ARE HEREBY DISCLAIMED. IN NO EVENT SHALL NETAPP BE LIABLE FOR ANY DIRECT, INDIRECT, INCIDENTAL, SPECIAL, EXEMPLARY, OR CONSEQUENTIAL DAMAGES (INCLUDING, BUT NOT LIMITED TO, PROCUREMENT OF SUBSTITUTE GOODS OR SERVICES; LOSS OF USE, DATA, OR PROFITS; OR BUSINESS INTERRUPTION) HOWEVER CAUSED AND ON ANY THEORY OF LIABILITY, WHETHER IN CONTRACT, STRICT LIABILITY, OR TORT (INCLUDING NEGLIGENCE OR OTHERWISE) ARISING IN ANY WAY OUT OF THE USE OF THIS SOFTWARE, EVEN IF ADVISED OF THE POSSIBILITY OF SUCH DAMAGE.

NetApp reserves the right to change any products described herein at any time, and without notice. NetApp assumes no responsibility or liability arising from the use of products described herein, except as expressly agreed to in writing by NetApp. The use or purchase of this product does not convey a license under any patent rights, trademark rights, or any other intellectual property rights of NetApp.

The product described in this manual may be protected by one or more U.S. patents, foreign patents, or pending applications.

LIMITED RIGHTS LEGEND: Use, duplication, or disclosure by the government is subject to restrictions as set forth in subparagraph (b)(3) of the Rights in Technical Data -Noncommercial Items at DFARS 252.227-7013 (FEB 2014) and FAR 52.227-19 (DEC 2007).

Data contained herein pertains to a commercial product and/or commercial service (as defined in FAR 2.101) and is proprietary to NetApp, Inc. All NetApp technical data and computer software provided under this Agreement is commercial in nature and developed solely at private expense. The U.S. Government has a non-exclusive, non-transferrable, nonsublicensable, worldwide, limited irrevocable license to use the Data only in connection with and in support of the U.S. Government contract under which the Data was delivered. Except as provided herein, the Data may not be used, disclosed, reproduced, modified, performed, or displayed without the prior written approval of NetApp, Inc. United States Government license rights for the Department of Defense are limited to those rights identified in DFARS clause 252.227-7015(b) (FEB 2014).

Trademark information

NETAPP, the NETAPP logo, and the marks listed at http://www.netapp.com/TM are trademarks of NetApp, Inc. Other company and product names may be trademarks of their respective owners.