Install and use SolidFire Enterprise SDS

Element Software

NetApp
May 18, 2022

This PDF was generated from https://docs.netapp.com/us-en/element-software-123/esds/concept_get_started_esds.html on May 18, 2022. Always check docs.netapp.com for the latest.

Table of Contents

Install and use SolidFire Enterprise SDS . . . 1
- Find more information . . . 1
- Get started with NetApp SolidFire Enterprise SDS . . . 1
- Perform the prerequisite tasks for installation . . . 5
- Install SolidFire eSDS using Ansible . . . 17
- Perform post-installation tasks . . . 20
- Upgrade the clusters . . . 28
- Monitor your clusters . . . 30
- Manage SolidFire eSDS storage . . . 31
- Uninstall SolidFire eSDS on the node . . . 33
- Maintain SolidFire eSDS . . . 34

Install and use SolidFire Enterprise SDS

Learn how to install and use SolidFire Enterprise SDS.

- Get started with NetApp SolidFire Enterprise
- Perform prerequisite tasks for installation
- Install SolidFire eSDS
- Perform post-installation tasks
- Upgrade the clusters
- Monitor your clusters
- Manage SolidFire eSDS storage
- Uninstall SolidFire eSDS
- Maintain SolidFire eSDS

Find more information

- NetApp SolidFire Resources Page
- Documentation for earlier versions of NetApp SolidFire and Element products

Get started with NetApp SolidFire Enterprise SDS

NetApp SolidFire Enterprise SDS (eSDS) provides the benefits of SolidFire scale-out technology and NetApp Element software data services on the hardware of your choice that meets the reference configuration for SolidFire eSDS. SolidFire eSDS delivers NetApp Element software independent of the underlying hardware. This enables you to use all the Element functionality either on a NetApp-branded appliance or on a general-purpose server, which complies with the NetApp reference configuration.

Key features of SolidFire eSDS

- Enables you to install and run Element software via containers.
- Delivers enterprise storage features and reliability using pre-validated commodity server platforms. You can run production workloads after installing the SolidFire eSDS software on the prescribed x86 server platform and underlying components (CPU, memory, SSD drives, cache, networking, firmware), per the published reference configuration in the NetApp Interoperability Matrix Tool (IMT).
- Provides Software Encryption at Rest. Software Encryption at Rest enables all data written to the SSDs in a storage cluster to be encrypted. This provides a primary layer of encryption in SolidFire eSDS nodes that do not include Self-Encrypting Drives (SEDs).
- Provides predictable cluster performance using Quality of Service (QoS) policies.
- Provides support for four to 40-node clusters.
- Licensed with the Term Capacity License model.
- Uses a new model for providing support by using support agreements with technology partners.

With SolidFire eSDS, NetApp provides containers for Element that you can run on commodity hardware that

meets the necessary requirements. You bring your own server with an operating system already installed. You use an automation tool, such as Ansible, to run the pre-installation compliance check and install SolidFire eSDS. As part of your pre-installation setup tasks, you should install the management node to support log bundle collection as well as other services, such as SolidFire AIQ. Here is an architectural overview that shows the various components in the SolidFire eSDS environment:

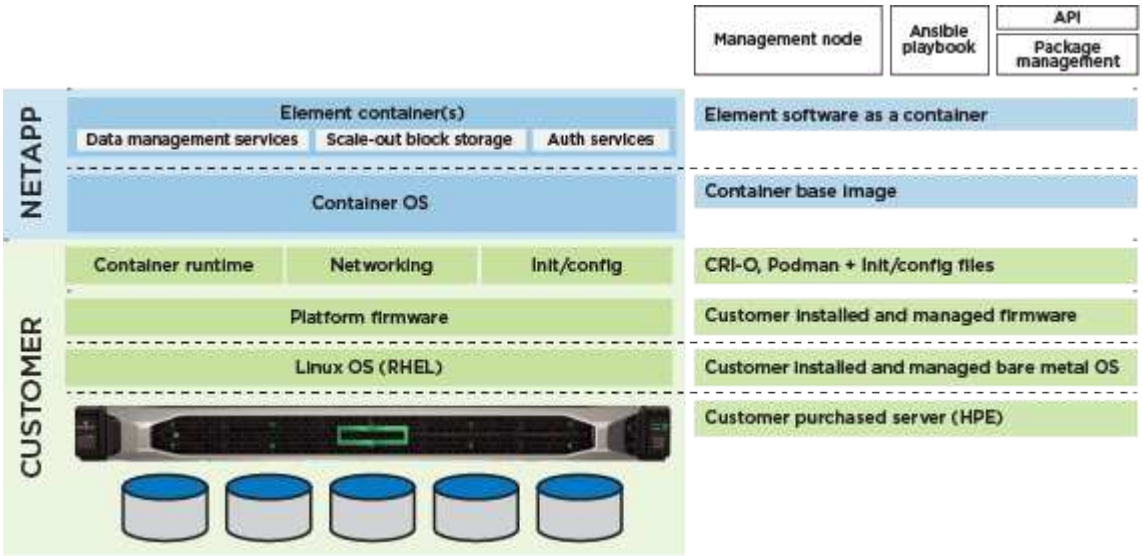

You are responsible for configuring, monitoring, and managing the life cycle of the platform as well as configuring the network interfaces and routing tables.

Some features of NetApp Element software are not applicable to SolidFire eSDS. Native Element features for traditional SolidFire storage nodes, such as hardware monitoring, firmware updates, Encryption as Rest (EAR) with Self-Encrypting Drives (SEDs), and Fibre Channel are disabled for SolidFire eSDS.

- External Key Management (EKM)
- Hardware encryption
- Multi-drive slice service (MDSS)
- Hardware monitoring, host platform updates (example: drivers, firmware, and operating system packages), and Fibre Channel

Quick start information

You can find a condensed set of instructions for installing SolidFire eSDS here.

Licensing policies

SolidFire eSDS is governed by NetApp Term Capacity License model.

Here is a high-level overview of the policies of this model:

- Software costs are based on raw capacity (size of the drive times the number of drives in the node or cluster), making the software costs for this model easy to predict.
- You do not require a software license key. You will receive a master serial number for the software on the sales order, which is included with the document kit you receive after you order. You must retain this master serial number because it will be used for support entitlement.

For more information, see Purchasing models for NetApp HCI and SolidFire.

Interfaces for installing and using SolidFire eSDS

Here is a list of tools and interfaces you use for installing, monitoring, and managing SolidFire eSDS:

Tool/interface	Who uses it	Description
Ansible compliance check role	Customer	For verifying that the platform matches the reference configuration listed in the NetApp Interoperability Matrix Tool (login required). You should do this before installing SolidFire eSDS.
Ansible install role	Customer	For installing SolidFire eSDS.
Management node	Customer	For log bundle collection and management services, such as AIQ.
NetApp Hybrid Cloud Control	Customer, NetApp Support	For cluster creation and per-node management, as well as log collection from the management node.
Hewlett Packard Enterprise (HPE) Integrated Lights Out (iLO)	Customer, HPE Support	For collecting data about events and statuses for root cause analysis.
Dell Integrated Dell Remote Access Controller (iDRAC)	Customer, Dell Support	For collecting data about events and statuses for root cause analysis.
NetApp Element software UI	Customer	For managing SolidFire eSDS storage clusters.
Active IQ	Customer, NetApp Support	For cluster health status monitoring.
One Collect	NetApp Support	For supplemental log collection.

Installation overview

You can install SolidFire eSDS using an automation tool, such as Ansible.

Here is the high-level overview of the installation using Ansible:

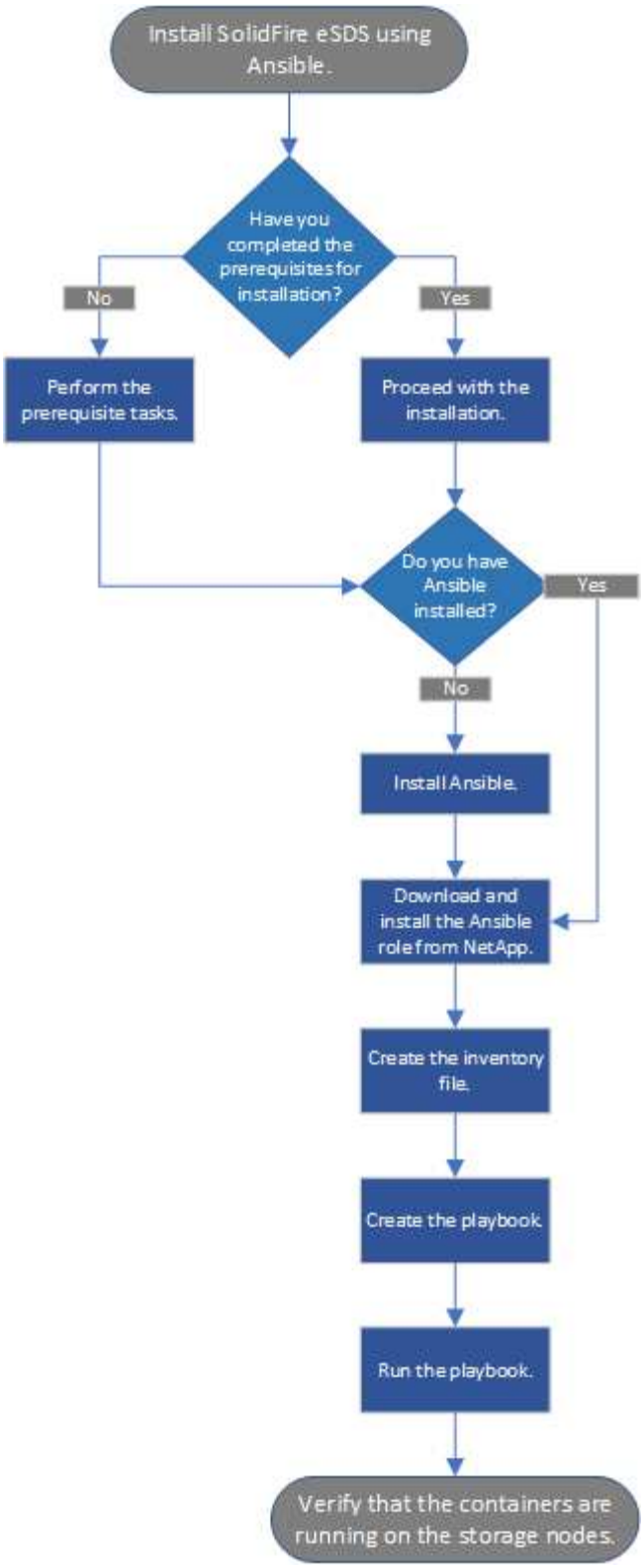

Dynamic node rating (*NEW in Element 12.3.1!*)

Dynamic node rating is a new feature in Element 12.3.1, which enables you to leverage 24 supported CPUs per eSDS platform as opposed to today's model of a single CPU per platform.

Dynamic node rating is supported on all platforms that are currently supported on eSDS: DL360, DL380, and R640.

For the first release of dynamic node rating, the maximum IOPS rating for any node is 100K IOPS.

Find more information

- NetApp SolidFire Resources Page
- Documentation for earlier versions of NetApp SolidFire and Element products

Perform the prerequisite tasks for installation

Ensure that you perform the necessary checks and verify that your environment meets the configuration, IP addressing, and networking requirements before you install SolidFire eSDS.

Install the required hardware

- Install the supported server. See NetApp Interoperability Matrix (login required) for more information.
- Ensure that your hardware configuration is balanced and all channels are populated. For more information about maximizing bandwidth, see the KB article (login required).

Configure the host (node)

- Install RHEL based on the supported versions listed in the NetApp Interoperability Matrix (login required).
- Configure a Network Time Protocol (NTP) server to use with all the hosts in your network.
- When selecting the installation destination, select the radio button to manually configure file system partitioning. On the **Manual Partitioning** page, use the **+** and **-** buttons to remove any existing partitions, and create new partitions and size them following the recommendations listed here. Using the default LVM partitioning scheme enables you to easily resize later, if needed.

  By default, RHEL chooses `xfs` as the default file system for the partitions that you manually create. You should change it to `ext4`, except for the `/boot` and `swap` partitions. Your `/boot` partition should use `ext2`.

  If your SATA disk is 250GB, follow the recommended partition below. If your SATA disk has more space, you can increase the /opt and /var partition sizes.

Partition	Size
/boot	1GB
/opt	50GB
/var	50GB
swap	4GB
/home	5GB
/	10GB minimum

Partition	Size
/usr	10GB minimum

> The `/dev/sdb` disk is not used by any process.

- Disable RAID for /boot.
- On the Software Selection screen, where you select specific packages to install, select **Server** or **Infrastructure Server** based on your RHEL version.
- After the first boot, do the following:
  - Install Red Hat Subscription Manager, and enable the following repositories:

    ```
    rhel-7-server-ansible-2.9-rpms
    rhel-7-server-optional-rpms
    rhel-7-server-extras-rpms
    ```

  - Enable SSH on your nodes.
  - If you want to disable IPv6, follow the steps detailed in this KB article (login required).

Install the required software

- Install Ansible, Git, Podman, and Python 3.0.

> For Element 12.3, the supported Podman version is 1.6.4.

Verify that your configuration matches NetApp's requirements for installing SolidFire eSDS

- Use the SolidFire eSDS configuration listed in the NetApp Interoperability Matrix Tool (IMT) as a reference.

> If you contact NetApp Support for assistance with issues relating to SolidFire eSDS, Support will first verify that your platform complies with the reference configuration for SolidFire eSDS listed in the IMT. If Support determines that your underlying platform does not comply with the reference configuration, Support will guide you in aligning the non-compliant firmware, software, and/or hardware components with the correct versions in the IMT.

- Run a compliance check for SolidFire eSDS.

  i. Run the `ansible-galaxy install` command to install the `nar_solidfire_sds_compliance` role.

  ```
  ansible-galaxy install git+https://github.com/NetApp-Automation/nar_solidfire_sds_compliance.git
  ```

  You can also manually install the role by copying it from the NetApp GitHub repository and placing the role in the `~/.ansible/roles` directory. NetApp provides a README file, which includes information about how to run a role.

> Ensure that you always download the latest versions of the roles.

ii. Move the roles that you downloaded up one directory from where they were installed.

```
$ mv ~/.ansible/roles/ansible/nar_solidfire_sds_* ~/.ansible/roles/
```

iii. Run the `ansible-galaxy role list` command to ensure that Ansible is configured to utilize the new roles.

```
- nar_solidfire_sds_install, (unknown version)
- nar_solidfire_sds_upgrade, (unknown version)
- ansible, (unknown version)
- nar_solidfire_sds_compliance, (unknown version)
- nar_solidfire_cluster_config, (unknown version)
- nar_solidfire_sds_uninstall, (unknown version)
```

iv. Create the playbook to use for the compliance check.

v. Run the compliance check playbook as shown in the following example:

```
$ ansible-playbook -i yourinventory.yml yourplaybook.yml
```

> Even after you start using the SolidFire eSDS system, you should run the compliance check regularly to ensure that your system is in compliance. In some cases, NetApp Support will ask you to run the compliance check to help diagnose and troubleshoot issues.

Understand network and IP address requirements

- Familiarize yourself with how to configure and manage networks and network interfaces in RHEL. See the RedHat documentation.
- Configure your network following the IP requirements detailed here:

Component	Storage network IP address	Management network IP address	Total # of IP addresses
Storage node	1	1	2 per node
Management node	(Optional) 1	1	1 per cluster on the storage network + 1 per cluster on the management network + 1 FQDN per cluster for the management node
Storage cluster	1 storage IP (SVIP)	1 management IP (MVIP)	2 per storage cluster

- Configure the storage network on 25GbE Ethernet switches and the management network on 10GbE switches. See the following cabling illustration:

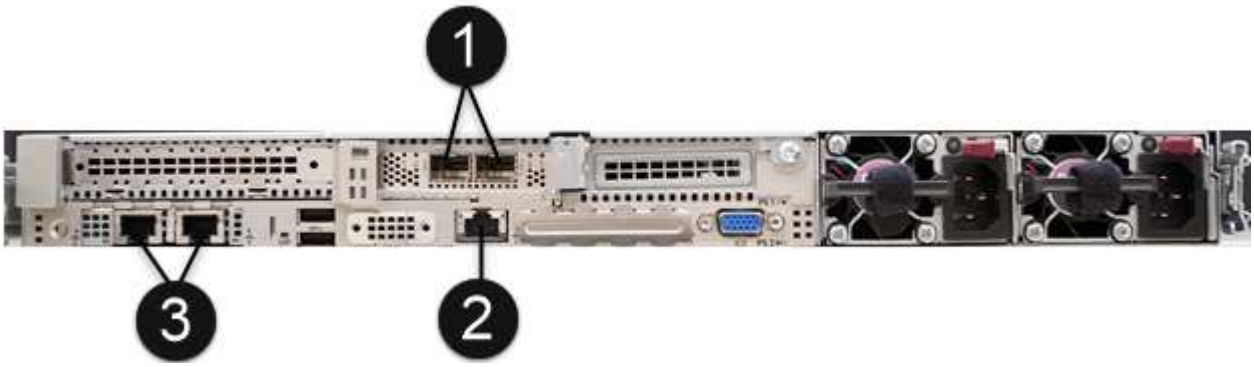

Item	Description
1	Ports for storage network
2	Port for IPMI
3	Ports for management network

> The illustration given here is intended to be an example. Your actual hardware might be different based on the server you have.

- Change the switch port MTU to 9216 bytes.

Allow specific ports through your datacenter's firewall

- If `firewalld` is enabled on the storage node running RHEL, ensure that you have the following ports open, so that you can manage the system remotely, allow clients outside of your datacenter to connect to resources, and ensure that internal services can function properly:

Source	Destination	Port	Description
Storage node MIP	Management node	80 TCP/UDP	Cluster upgrades
SNMP server	Storage node MIP	161 UDP	SNMP polling
System administrator PC	Management node	442 TCP	HTTPS UI access to management node
System administrator PC	Storage node MIP	442 TCP	HTTPS UI access to storage node
iSCSI clients	Storage cluster MVIP	443 TCP	(Optional) UI and API access

Source	Destination	Port	Description
Management node	monitoring.solidfire.com	443 TCP	Storage cluster reporting to Active IQ
Storage node MIP	Remote storage cluster MVIP	443 TCP	Remote replication cluster pairing communication
Storage node MIP	Remote storage node MIP	443 TCP	Remote replication cluster pairing communication
SolidFire eSDS sfapp	Per-node UI and API access to create a cluster	2010 UDP	Cluster beacon (to discover nodes to add to a cluster)
iSCSI clients	Storage cluster SVIP	3260 TCP	Client iSCSI communications
iSCSI clients	Storage cluster SIP	3260 TCP	Client iSCSI communications
SOAP server	SolidFire eSDS sfapp	7627 TCP	SOAP web services
System administrator PC	N/A	8080 TCP	System administrator communications
vCenter Server	Management node	8443 TCP	vCenter Plug-in QoSSIOC service

Ports 2181, 2182, and 2183 are needed for are needed for the Element distributed database, and will be dynamically opened from the Element container when you install SolidFire eSDS.

- Use the following commands to open the ports mentioned above:

```
systemctl start firewalld
firewall-cmd --permanent --add-service=snmp
firewall-cmd --permanent --add-port=80/tcp
firewall-cmd --permanent --add-port=80/udp
firewall-cmd --permanent --add-port=442-443/tcp
firewall-cmd --permanent --add-port=442-443/udp
firewall-cmd --permanent --add-port=2010/udp
firewall-cmd --permanent --add-source-port=2010/udp
firewall-cmd --permanent --add-port=3260/tcp
firewall-cmd --permanent --add-port=7627/tcp
firewall-cmd --permanent --add-port=8080/tcp
firewall-cmd --permanent --add-port=8443/tcp
firewall-cmd --reload
```

Configure your host network

- Configure your host network using the best practices provided.

> You should complete the steps to configure your host network to ensure a successful installation of SolidFire eSDS.

Complete additional requirements

- Install One Collect, which will be used by NetApp Support for host log collection. You can install One Collect from here. You need a NetApp account to access the download. You can also find the One Collect Installation Guide and Release Notes at the same location.

> You must download and install One Collect in order to receive an optimal support experience.

- Install the management node for log collection and to enable NetApp Support access for troubleshooting. For information about management node and installation steps, see here.

Find more information

- NetApp SolidFire Resources Page
- Documentation for earlier versions of NetApp SolidFire and Element products

Considerations for network configuration

Before you install SolidFire eSDS, you should set up the required networks on the storage nodes running RHEL. You are responsible for network routing in your environment. You can use the best practices provided as a framework.

- Use bonded or teamed interfaces.
- Use the same interface names for all the nodes in the cluster (example: team-mgt for each node's management interface and team-stg for each node's storage interface).
- Ensure that NetworkManager is running.
- Ensure that the NetworkManager-dispatcher-routing-rules package is installed on all storage nodes for policy-based routing.
- See Best Practices for Networking and Network Maintenance on NetApp SolidFire Storage Systems.
- Configure the management and storage networks on each node to use multiple, redundant physical interfaces via bond or team configurations.

For information about network teaming, see Configure network teaming. By default, all storage node 10GbE interfaces are enabled with a maximum transmission unit (MTU) of 9000 bytes. For optimal performance, configure all server-side storage interfaces with the same MTU as the NetApp SolidFire storage nodes. You should configure network switches to support an MTU of at least 9016 bytes or more to account for jumbo frame overhead and for proper forwarding through the network. If you want to change this configuration to support a lower MTU setting, you should contact NetApp Support.

See the following table for information about the storage and management networks that SolidFire eSDS requires for the different types of traffic:

Type of network	Description
Storage network	• Includes all storage/iSCSI traffic. • Can be routed if you want to mount from hosts located on a different layer 3 network or if you plan to replicate data between clusters. • Should be configured with network interfaces on the same layer 2 broadcast domain.
Management network	• Includes all management traffic. • Can be routed if you want to access the cluster API or UI from a different layer 3 network. • Should be configured with network interfaces on the same layer 2 broadcast domain. • Should be configured with a network interface card with an MTU of at least 1500 bytes.

For examples and tips to configure the host network, see here.

Find more information

- NetApp SolidFire Resources Page
- Documentation for earlier versions of NetApp SolidFire and Element products

Configure the host networking

Use the examples and tips provided to configure the host networking before you install SolidFire eSDS.

Here is a sample network configuration:

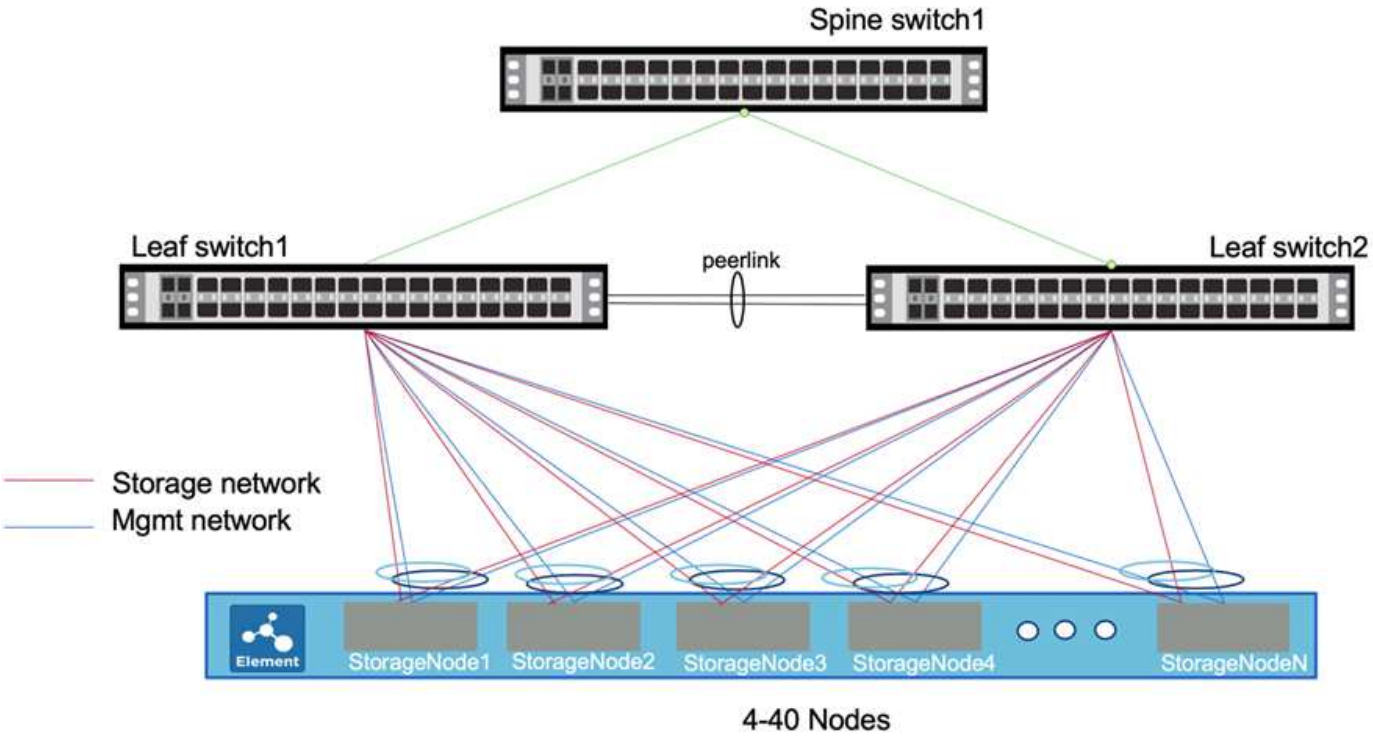

In this example, two interfaces on the storage node are network teamed and connected to the management network for redundancy purposes. Likewise, two additional interfaces are teamed and connected to the storage network.

> Each interface has a configuration file named ifcfg-<interface-name>X, where X is the number of the interface, starting with zero or 1 depending upon the naming convention used. The configuration files are created when you first create the interfaces. One configuration file should already exist for each of the two physical interfaces connected to the storage network. One configuration file should also exist for each of the two physical interfaces connected to the management network. The interface configuration files are placed in the /etc/sysconfig/network-scripts directory. See Interface configuration files.

> The examples provided here have the storage and management interface names for HPE servers. If you have a Dell server, the interface names are different. Storage interface names for the Dell server are em1 and em2. Management interface names for the Dell server are p3p1 and p3p2.

Steps

1. Install `NetworkManager-dispatcher-routing-rules` package, and ensure that the appropriate repositories are configured.
2. Configure your network switch using your switch vendor's documentation. For specific instructions about configuring Multi-chassis Link Aggregation Group (MLAG) protocol and Link Aggregation Control Protocol (LACP), see your switch vendor's documentation.

> It is recommended that you configure LACP fallback and disable LACP individual port suspension behavior by running `no lacp suspend-individual`. This enables the AccessPoint link to come up even without LACP packets being broadcast in case of misconfiguration.

3. Edit the two configuration files for the physical interfaces connected to the storage network using the following example. Jumbo frame setting on the storage network is highly recommended, but not required. In this example below, the storage interface name is ens2f0 and the storage team name is team10G:

> In all the example configurations listed here, NAME and DEVICE use the same values. You can use different values if you choose to do so.

```
# cat /etc/sysconfig/network-scripts/ifcfg-ens2f0
# 10G Team Physical Port to Storage Network
NAME=ens2f0
DEVICE=ens2f0
ONBOOT=yes
TEAM_MASTER=team10G
DEVICETYPE=TeamPort
MTU=9000
```

4. Edit the two configuration files for the interfaces connected to the management network using the following example. In this example, the management interface name is eno5 and the management team name is team1G:

```
# cat ifcfg-eno5
# 1G Team Physical Port to Management Network
NAME=eno5
DEVICE=eno5
ONBOOT=yes
TEAM_MASTER=team1G
DEVICETYPE=TeamPort
```

5. Create the team interface file for the storage team using the following example. In this example, the team is called team10G. It is on the storage network running the network teaming lacp runner.

> The active/active configuration is recommended for storage interfaces. This configuration requires extra active/active Multi-chassis Link Aggregation Group (MLAG) protocol and Link Aggregation Control Protocol (LACP) to be configured on the switches. This configuration requires the network teaming lacp runner.

```
# cat /etc/sysconfig/network-scripts/ifcfg-team10G
# IPADDR= "SIP"
# GATEWAY= "SIP_GATEWAY"
# Pick one TEAM_CONFIG, activebackup or lacp
# note that lacp require changing switch port to lacp as well

TEAM_CONFIG="{\"runner\": {\"name\": \"lacp\"}, \"link_watch\":
{\"name\": \"ethtool\"}}"
PROXY_METHOD=none
BROWSER_ONLY=no
BOOTPROTO=none
DEFROUTE=no
IPV4_FAILURE_FATAL=no
IPV6INIT=no
NAME=team10G
DEVICE=team10G
ONBOOT=yes
DEVICETYPE=Team
IPADDR=192.0.2.2
PREFIX=24
GATEWAY=192.0.2.1
NM_CONTROLLED=yes
MTU=9000
```

6. Create the team interface file for the management team using the following example. In this example, the team is called team1G. It is on the management network running the network teaming activebackup runner.

> The active/passive configuration is recommended for management interfaces, though you can also use the active/active configuration. This does not require extra configurations on the leaf switches. This configuration uses the network teaming activebackup runner.

```
# cat /etc/sysconfig/network-scripts/ifcfg-team1G
# IPADDR= "MIP"
# GATEWAY= "MIP_GATEWAY"
# DNS1= "DNS"
# Pick one TEAM_CONFIG, activebackup or lacp
# note that lacp require changing switch port to lacp as well

TEAM_CONFIG="{\"runner\": {\"name\": \"activebackup\"}, \"link_watch\":
{\"name\": \"ethtool\"}}"
#TEAM_CONFIG="{ \"runner\": {\"name\": \"lacp\", \"active\": true,
\"fast_rate\": true }}"
PROXY_METHOD=none
BROWSER_ONLY=no
BOOTPROTO=none
DEFROUTE=yes
IPV4_FAILURE_FATAL=no
IPV6INIT=no
IPV6_AUTOCONF=yes
IPV6_DEFROUTE=yes
IPV6_FAILURE_FATAL=no
IPV6_ADDR_GEN_MODE=stable-privacy
NAME=team1G
DEVICE=team1G
ONBOOT=yes
DEVICETYPE=Team
IPADDR=198.51.100.2
PREFIX=24
GATEWAY=198.51.100.1
DNS1=198.51.100.250
NM_CONTROLLED=yes
```

7. Edit the `/etc/iproute2/rt_tables` file to enable a new routing table using the following sample. This file defines the mappings to use the routing table names instead of index numbers to refer to a specific table. In the following example, the new storage routing table called team10G can be called by its index (20) or its name (team10G):

```
# cat /etc/iproute2/rt_tables
#
# reserved values
#
255local
254main
253default
0unspec

20   team10G
```

8. Add routes to the routing table for storage traffic using the following example. This routing table points to the storage network as a default gateway and must be used for iSCSI traffic. In the following example, the teamed interface name is team10G.

> You should replace `$storage_network`, `$storage_if_name src`, `$SIP table`, `$routing_table_name`, `$storage_default_gw dev`, `$storage_if_name src`, `$SIP table`, and `$routing_table_name` with your own values.

```
# cat /etc/sysconfig/network-scripts/route-team10G
$storage_network/24 dev $storage_if_name src $SIP table
$routing_table_name
default via $storage_default_gw dev $storage_if_name src $SIP table \
$routing_table_name
```

9. Add policy-based routing to use the new routing table that you created, if the traffic originates from the SIP or SVIP. Use the following example and substitute with your own values:

```
# cat /etc/sysconfig/network-scripts/rule-team10G
from $SIP table
$routing_table_name
```

10. Restart networking for all the changes to be applied.

```
# systemctl restart network.service
```

11. To check the policy-based routing rules, run the `ip rule show` command.
12. To check the routing table, run the `ip route show table` command.

Find more information

- NetApp SolidFire Resources Page

- Documentation for earlier versions of NetApp SolidFire and Element products

Install SolidFire eSDS using Ansible

You can install SolidFire eSDS using an automation tool, such as Ansible. If you are very familiar with Ansible, you can create one Ansible playbook that combines several tasks, such as installing SolidFire eSDS and creating a cluster.

What you'll need

- You have installed Ansible on your local server by following the instructions provided here.
- You have familiarized yourself with Ansible roles. See here.
- You have performed all the prerequisite tasks listed here.
- You have run a compliance check for SolidFire eSDS. For instructions on how to run the compliance check, see here.

About this task

Use Ansible Vault for sensitive information, such as passwords rather than using plain text. For more information, see the following links:

- Using Ansible Vault
- How to build your inventory

> You should specify all the required variables in your inventory file and not in the playbook.

Steps

1. Run the `ansible-galaxy install` command to install the `nar_solidfire_sds_install` role.

   ```
   ansible-galaxy install git+https://github.com/NetApp-
   Automation/nar_solidfire_sds_install.git
   ```

   You can also manually install the role by copying it from the NetApp GitHub repository and placing the role in the `~/.ansible/roles` directory. NetApp provides a README file, which includes information about how to run a role.

   > Ensure that you always download the latest versions of the roles.

2. Move the roles that you downloaded up one directory from where they were installed.

   ```
   $ mv ~/.ansible/roles/ansible/nar_solidfire_sds_* ~/.ansible/roles/
   ```

3. Run the `ansible-galaxy role list` command to ensure that Ansible is configured to utilize the new roles.

```
$ ansible-galaxy role list
# ~/.ansible/roles
- nar_solidfire_sds_install, (unknown version)
- nar_solidfire_sds_upgrade, (unknown version)
- ansible, (unknown version)
- nar_solidfire_sds_compliance, (unknown version)
- nar_solidfire_cluster_config, (unknown version)
- nar_solidfire_sds_uninstall, (unknown version)
```

The README file associated with roles includes a list of all the required and optional variables that you should define as shown below:

```
Example Playbook
----------------
...
- name: Install SolidFire Enterprise SDS
  hosts: all
  gather_facts: True

  roles:
    - role: nar_solidfire_sds_install
      vars:
        solidfire_element_rpn: http://<server>/<path>/solidfire-element-W.X.Y.Z-N.el{7,8}.x86_64.rpm
        mgmt_iface: mgmt_t0
        storage_iface: strg_t1
        storage_devices:
          - /dev/sda
          - /dev/sdb
          - /dev/sdd
          - /dev/sde
          - /dev/sdf
          - /dev/sdg
          - /dev/sdh
          - /dev/sdi
          - /dev/sdj
        cache_devices:
          - /dev/sdc
```

You should define these variables in the inventory file, which you will create in the next step.

4. Create the inventory file in your Ansible working directory.

In the inventory file, you should include all the hosts (nodes) on which you want to install SolidFire eSDS. The inventory file enables the playbook (which you will create in the next step) to manage multiple hosts with a single command. You should also define variables, such as username and password for your storage nodes, names of the management interface and storage interface, and so on.

Ensure that you follow these guidelines for the inventory file: **Use the correct spellings for device names.** Use correct formatting in the file. **Ensure that there is only one cacheDevice.** Use a list to specify storage_devices.

The examples provided here have the storage and management interface names for HPE servers. If you have a Dell server, the cache device name is nvme1n1. For Dell servers, mgmt_iface is team1G and storage_iface is team10G.

A sample inventory file is shown below. It includes four storage nodes. In this example, replace **storage node MIP** with the MIP addresses for your storage nodes and replace * with the username and password for your storage nodes.

```
all:
    hosts:
        storage node MIP:
        storage node MIP:
        storage node MIP:
        storage node MIP:
    vars:
        ansible_connection: ssh
        ansible_ssh_common_args: -o StrictHostKeyChecking=no
        ansible_user: *****
        ansible_ssh_pass: *****
        solidfire_element_rpm: http://sf-
artifactory.solidfire.net/artifactory/crux/solidfire-element-**.*.*.***-
*.***.x86_64.rpm
        mgmt_iface: "team0"
        storage_iface: "team1"
        storage_devices:
          - "/dev/nvme0n1"
          - "/dev/nvme1n1"
          - "/dev/nvme2n1"
          - "/dev/nvme3n1"
          - "/dev/nvme4n1"
          - "/dev/nvme5n1"
          - "/dev/nvme6n1"
          - "/dev/nvme7n1"
          - "/dev/nvme8n1"
        cache_devices:
          - "/dev/nvme9n1"
```

5. Ping the hosts (nodes) you defined in the inventory file to verify that Ansible can communicate with them.
6. Download the Red Hat Package Manager (RPM) file to the file directory on a local web server accessible from the server running Ansible and the storage nodes.
7. Create the Ansible playbook. If you already have a playbook, you can modify it. You can use the examples in the README file that NetApp provides.
8. Install SolidFire eSDS by running the playbook you created in the previous step:

   ```
   $ ansible-playbook -i inventory.yaml sample_playbook.yaml
   ```

   Replace **sample_playbook.yaml** with the name of your playbook and **inventory.yaml** with the name of your inventory file. Running the playbook creates the `sf_sds_config.yaml` file on each node that is listed in your inventory file. It also installs and starts the SolidFire service on each storage node. For more information about `sf_sds_config.yaml`, see here.

9. Check the Ansible output in the console to ensure that the SolidFire service was started on each node.

Here is a sample output:

```
TASK [nar_solidfire_sds_install : Ensure the SolidFire eSDS service is
started]
*********************************************************************
********************

changed: [10.61.68.52]

changed: [10.61.68.54]

changed: [10.61.68.51]

changed: [10.61.68.53]



PLAY RECAP
*********************************************************************
*********************************************************************
******************

10.61.68.51                : ok=12   changed=3    unreachable=0
failed=0    skipped=10   rescued=0    ignored=0

10.61.68.52                : ok=12   changed=3    unreachable=0
failed=0    skipped=10   rescued=0    ignored=0

10.61.68.53                : ok=12   changed=3    unreachable=0
failed=0    skipped=10   rescued=0    ignored=0

10.61.68.54                : ok=12   changed=3    unreachable=0
failed=0    skipped=10   rescued=0    ignored=0
```

10. To verify that the SolidFire service was started correctly, run the `systemctl status solidfire` command, and check for `Active:active (exited)`… in the output.

Find more information

- NetApp SolidFire Resources Page
- Documentation for earlier versions of NetApp SolidFire and Element products

Perform post-installation tasks

After you install SolidFire eSDS, configure the cluster name on each SolidFire eSDS node. You can then create a SolidFire eSDS cluster.

About this task

Here is a high-level overview of the tasks that you should complete after you install SolidFire eSDS:

- Configure the cluster name
- Set the license key
- Create a cluster
- Add drives to the cluster

> You can use the `nar_solidfire_cluster_config` Ansible role provided by NetApp to perform the post-installation steps. If you want to manually do it, see the steps outlined below.

Configure the cluster name

You should configure the cluster name on each SolidFire eSDS node before you can add the node to a cluster. You can do this using either the per-node UI or the Element API.

> You cannot change the cluster name after the cluster is created.

Steps

1. Choose from one of the following options:
   - Use the per-node UI:
     i. Open the per-node management node UI: `https://<node_mip>:442`.
     ii. Select **Cluster Settings** and enter the cluster name.
     iii. Select **Apply Changes**.
   - Use the `SetClusterConfig` API method.

     This method has the following input parameter:

Name	Description	Type	Default value	Required
`cluster`	Configuration attributes that should be changed during this method call. Only the fields you want changed need to be added to this method as members in this parameter.	cluster	None	No

     See the following request example:

```
{
   "method": "SetClusterConfig",
   "params": {
      "cluster": {
         "name": "myhost",
         "mipi": "Bond10G"
      },
    "id" : 1
   }
}
```

Set the license key

When you create a SolidFire eSDS cluster, you need the license key information. NetApp Support will also need the license key information for help with issue resolution. The license key for the SolidFire eSDS cluster consists of the cluster's order number combined with the serial number, and activates the capacity term license model you have purchased.

About this task

You can use the `SetLicenseKey` method to set the license key for the SolidFire eSDS storage cluster. The `SetLicenseKey` method has the following input parameters:

Name	Description	Type	Default value	Required
`orderNumber`	The new sales order number for this storage cluster.	string	None	Yes
`serialNumber`	The new serial number for this storage cluster.	string	None	Yes

This method has the following return values:

Name	Description	Type
`orderNumber`	The new sales order number of the storage cluster.	string
`serialNumber`	The new serial number of the storage cluster.	string

Step

1. Use the `SetLicenseKey` API method as shown in the following example:

   Requests for this method are similar to the following example:

```
{
  "method": "SetLicenseKey",
  "params": {
    "orderNumber": "33601",
    "serialNumber": "30G56E3WV"   },
   "id" : 1
}
```

This method returns a response similar to the following example:

```
{
   "id" : 1,
   "result" : {
      "serialNumber": "30G56E3WV",
      "orderNumber": "33601"
     }
   }
}
```

Create a cluster

After you configure the cluster name on each SolidFire eSDS storage node, you can create a cluster using either the per-node UI or the Element API.

> Software Encryption at Rest is enabled by default for SolidFire eSDS clusters. If you want to change the default, you should do so when you create the cluster by using the `CreateCluster` API method.

Steps

1. Choose from one of the following options:
   - Use the per-node UI:
     i. Open the per-node management node UI: `https://<node_mip>:442*`.
     ii. From the left-hand navigation, select **Create Cluster**.
     iii. Select the checkboxes for the nodes. The SolidFire eSDS nodes will be displayed as SFc100.
     iv. Enter the following information: username, password, management virtual IP (MVIP) address, storage virtual IP (SVIP) address, software order number, and serial number.

     > You cannot change the MVIP and SVIP addresses after the cluster is created. Using the same IP addresses for MVIP and SVIP is not supported.

     > You cannot change the initial cluster administrator user name.

> If you do not specify the order number and serial number, the create cluster operation will fail.

v. Confirm that you have read the NetApp End User License Agreement.

vi. Select **Create Cluster**.

vii. To verify that cluster was created, log in to the cluster: `http://mvip_ip`.

viii. Verify that the clusterName, SVIP, MVIP, Node Count, and Element version are correct.

- Use the `CreateCluster` API method.

  This method has the following input parameters:

Name	Description	Type	Default value	Required
`acceptEula`	Indicate your acceptance of the End User License Agreement when creating this cluster. To accept the EULA, set this parameter to true.	boolean	None	Yes
`attributes`	List of name-value pairs in JSON object format.	JSON object	None	No
`enableSoftwareEncryptionAtRest`	Enable this parameter to use software-based encryption at rest. Defaults to true on SolidFire eSDS clusters. Defaults to false on all other clusters.	boolean	true	No

Name	Description	Type	Default value	Required
`mvip`	Floating (virtual) IP address for the cluster on the management network.	string	None	Yes
`nodes`	CIP/SIP addresses of the initial set of nodes making up the cluster. This node's IP must be in the list.	string array	None	Yes
`orderNumber`	Alphanumeric sales order number. Required on SolidFire eSDS.	string	None	No (hardware-based platforms) Yes (software-based platforms)
`password`	Initial password for the cluster admin account.	string	None	Yes
`serialNumber`	Nine-digit alphanumeric Serial Number. Required on SolidFire eSDS.	string	None	No (hardware-based platforms) Yes (software-based platforms)
`svip`	Floating (virtual) IP address for the cluster on the storage (iSCSI) network.	string	None	Yes
`username`	User name for the cluster admin.	string	None	Yes

See the following example request:

```
{
  "method": "CreateCluster",
  "params": {
    "acceptEula": true,
    "mvip": "10.0.3.1",
    "svip": "10.0.4.1",
    "repCount": 2,
    "username": "Admin1",
    "password": "9R7ka4rEPa2uREtE",
    "attributes": {
      "clusteraccountnumber": "axdf323456"
    },
    "nodes": [
      "10.0.2.1",
      "10.0.2.2",
      "10.0.2.3",
      "10.0.2.4"
    ]
  },
  "id": 1
}
```

For more information about this method, see `CreateCluster`.

Add drives to the cluster

You should add drives to your SolidFire eSDS cluster so that they can participate in the cluster. You can do this using either the Element UI or the APIs.

Steps

1. Choose from one of the following options:
   - Use the Element UI:
     i. From the Element UI, select **Cluster** > **Drives**.
     ii. Select **Available** to view the list of available drives.
     iii. To add individual drives, select the **Actions** icon for the drive you want to add, and then select **Add**.
     iv. To add multiple drives, select the check boxes for the drives to add, select **Bulk Actions**, and then select **Add**.
     v. Verify that the drives are added, and the cluster capacity is as expected.
   - Use the `AddDrives` API method.

     This method has the following input parameter:

Name	Description	Type	Default value	Required
`drives`	Information about each drive to be added to the cluster. Possible values: • driveID: The ID of the drive to add (integer). • type: The type of drive to add (string). Valid values are "slice", "block", or "volume". If omitted, the system assigns the correct type.	JSON object array	None	Yes (type is optional)

Here is a request example:

```
{
  "id": 1,
  "method": "AddDrives",
  "params": {
    "drives": [
      {
        "driveID": 1,
        "type": "slice"
      },
      {
        "driveID": 2,
        "type": "block"
      },
      {
        "driveID": 3,
        "type": "block"
      }
    ]
  }
}
```

For more information about this API method, see `AddDrives`.

Find more information

- NetApp SolidFire Resources Page
- Documentation for earlier versions of NetApp SolidFire and Element products

Upgrade the clusters

You can use Ansible to perform non-disruptive rolling upgrades on your SolidFire eSDS cluster. Using the `nar_solidfire_sds_upgrade` role provided by NetApp, Ansible performs rolling upgrades one node at a time while maintaining data availability to all the volumes.

What you'll need

Ensure that the following conditions are met before you upgrade:

- There are no cluster faults in the Element UI.
- The inventory file is up to date with the current RPM file build information and details about cluster member nodes.
- The hosts are defined in the inventory file by using IP addresses (and not fully qualified domain names [FQDNs]).

> The upgrade will fail if you define the hosts by using FQDNs.

- The hosts are defined in the inventory file using the format in the following example:

```
hosts:
  10.117.136.26:
  10.117.136.27:
```

- The number of nodes in your inventory file is the same as the number of nodes in the cluster that you are upgrading. If there is a number mismatch, the upgrade procedure will fail with a error similar to the following example: `"Cluster 10.194.79.151 consists of more nodes than what has been specified for upgrade!"`
- The inventory file has the following variables specified: sf_mgmt_virt_ip (MVIP), sf_cluster_admin_username, sf_cluster_admin_passwd, and solidfire_element_rpm (path to the new RPM file).

Upgrade overview

Here is an overview of what happens during the upgrade process:

- The information you entered in the inventory file is validated.
- Node information is collected.
- RPM is installed on all nodes included in the inventory file in parallel.
- After the RPM is installed on each node, each SolidFire eSDS node is upgraded one at a time. Each node is automatically placed in maintenance mode. You do not have to manually enable maintenance mode if you are running the upgrade playbook.

- After the first node is placed in maintenance mode, volumes hosted on that SolidFire eSDS node are failed over to remaining SolidFire eSDS nodes in the cluster.
- SolidFire service is restarted to pick up the latest version of the application.
- Maintenance mode is deactivated for the node, and the cluster waits for the node to recover.
- After the node comes back online, the cluster is balanced.
- The same process is repeated for all the nodes in the cluster.
- After all the nodes are upgraded, the cluster shows the latest version.

> If an error happens during the upgrade or your cluster experiences a fault, the upgrade does not stop. It progresses to the extent that it can and prints out a list of all the nodes that were successfully and unsuccessfully upgraded. After you fix any errors, you can rerun the playbook or reject the file to complete the upgrade process.

> If the upgrade fails because of a fault, you should resolve it and resume the upgrade. The cluster remains in upgrade status until the upgrade is complete. If the fault is not cleared by Element while the cluster is in upgrade status, you should contact NetApp Support. Depending on the nature of the fault and if it is safe to do so, Support might instruct you to add the `yes_i_want_to_ignore_cluster_faults` variable and set it to true in your upgrade playbook and re-run playbook. Do not attempt this without consulting with Support.

Steps

1. Run the `ansible-galaxy install` command to install the `nar_solidfire_sds_upgrade` role.

   ```
   ansible-galaxy install git+https://github.com/NetApp-
   Automation/nar_solidfire_sds_upgrade.git
   ```

   You can also manually install the role by copying it from the NetApp GitHub repository and placing the role in the `~/.ansible/roles` directory. NetApp provides a README file, which includes information about how to run a role.

   > Ensure that you always download the latest versions of the roles.

2. Move the roles that you downloaded up one directory from where they were installed.

   ```
   $ mv ~/.ansible/roles/ansible/nar_solidfire_sds_* ~/.ansible/roles/
   ```

3. Run the ansible-galaxy role list command to ensure that Ansible is configured to utilize the new roles.

```
$ ansible-galaxy role list
# ~/.ansible/roles
- nar_solidfire_sds_install, (unknown version)
- nar_solidfire_sds_upgrade, (unknown version)
- ansible, (unknown version)
- nar_solidfire_sds_compliance, (unknown version)
- nar_solidfire_cluster_config, (unknown version)
- nar_solidfire_sds_uninstall, (unknown version)
```

4. Create the playbook to use for upgrades. If you already have a playbook and want to use that, ensure that you specify the `nar_solidfire_sds_upgrade` role in this playbook.
5. Run the playbook:

```
$ ansible-playbook -i inventory.yaml playbook_upgrade_sample.yaml
```

> The playbook name used here is an example. You should replace it with the name of your playbook.

Running the playbook validates the information that you entered in the inventory file and installs the RPM on all the nodes listed in the inventory. You can check the Ansible output to verify that each node is upgraded.

6. After the upgrade is complete, verify each node to ensure that the new version is running by using the Element UI or the cluster API.

Find more information

- NetApp SolidFire Resources Page
- Documentation for earlier versions of NetApp SolidFire and Element products

Monitor your clusters

You can monitor the performance of your SolidFire eSDS clusters and view the inventory using the NetApp Hybrid Cloud Control UI. You can also collect logs for troubleshooting using the NetApp Hybrid Cloud Control UI.

Here are the links to the information about monitoring your clusters in the NetApp Hybrid Cloud Control UI:

- View your inventory on the Nodes page
- Monitor volumes on your storage cluster

Find more information

- NetApp SolidFire Resources Page
- Documentation for earlier versions of NetApp SolidFire and Element products

Manage SolidFire eSDS storage

After you install SolidFire eSDS on your storage clusters, you can use the Element UI, Element APIs, or the NetApp Element Plug-in for vCenter Server (VCP) to manage your storage clusters.

Here are the links to the content for various storage management tasks:

- Use basic options in the Element software UI
- Work with user accounts
- Work with volumes

  You can also find information about applying a QoS policy to volumes here.

- Work with virtual volumes
- Work with volume access groups and initiators
- Work with snapshots
- Get started with external key management *NEW!*
- Set up external key management *NEW!*
- Perform remote replication between clusters
- Back up and restore volumes
- Manage storage using Element APIs
- Troubleshoot your system
- NetApp Element Plug-in for vCenter Server overview

  You can navigate to specific tasks from the overview page.

Use Element APIs on SolidFire eSDS clusters

- **Software encryption at rest enhancements**: Element 12.3 introduces enhancements for the software encryption at rest feature, which is enabled by default when you create a SolidFire Enterprise SDS storage cluster. This feature encrypts all data stored on the SSDs in the storage nodes and causes only a very small (~2%) performance impact on client IO. The following are Element API methods related to software encryption at rest (see the Element API documentation for details about each method):
  - `CreateCluster`
  - `DisableEncryptionAtRest`
  - `EnableEncryptionAtRest`
  - `GetSoftwareEncryptionAtRestInfo`
  - `RekeySoftwareEncryptionAtRestMasterKey`
- **Ability to define a maximum number of snapshots to retain**: Element 12.3 introduces enhancements to the snapshot retention feature. The following APIs have been modified to support this enhancement (see the Element API documentation for details about each method):
  - `CreateVolume`

    - `ModifyVolume`
    - `CreateSnapshot`
    - `CreateSchedule`
    - `ModifyGroupSnapshot`
    - `ModifySchedule`
    - `ModifySnapshot`
    - `CreateGroupSnapshot`
- **Get information about Element software patches**: Element 12.3 introduces the `GetPatchInfo` method, which enables you to get information about Element software patches installed on a storage node. See the Element API documentation for details.
- **List statistics for each network interface on a node**: Element 12.3 introduces the `ListNetworkInterfaceStats` method, which enables you to list statistics, such as the number of dropped packets and various types of errors for each network interface on a node. This API method is intended for use on individual nodes; user ID and password authentication is required for access to individual nodes. However, you can use this method on the cluster if the parameter force is given the value true in the method call. When the parameter is used on the cluster, network statistics for all interfaces are listed. See the Element API documentation for details.
- **APIs introduced and updated in Element 12.2 to support SolidFire eSDS**: Several new APIs were introduced in Element 12.2 that you can use on SolidFire eSDS clusters.

Here is a list of new APIs in Element 12.2:

- `GetLicenseKey`
- `SetLicenseKey`
- `EnableMaintenanceMode`
- `DisableMaintenanceMode`

The following 12.2 APIs have been updated to support SolidFire eSDS clusters:

- `AddNodes`
- `CreateCluster`

> New parameters, `OrderNumber`, `SerialNumber`, and `enableSoftwareEncryptionAtRest` have been added to the `CreateCluster` method in Element software 12.2. You should specify these parameters while using this API method for creating a cluster after you install SolidFire eSDS.

- **Element 12.2 APIs not supported on SolidFire eSDS clusters**: Here is a list of Element 12.2 APIs that are not supported on SolidFire eSDS clusters:
- `ListClusterInterfacePreferences`
- `ListNodeStats`
- `DisableSsh`
- `DisableClusterSsh`

- `EnableClusterSsh`
- `EnableSsh`
- `GetIpmiConfig`
- `GetIpmiInfo`
- `GetSshInfo`
- `ListNetworkInterfaces`
- `ResetNode`
- `RestartNetworking`
- `ResetNetworkConfig`
- `SetConfig`
- `SetNetworkConfig`
- `DisableBmcColdReset`
- `EnableBmcColdReset`
- `SetNtpInfo`
- `TestAddressAvailability`

Find more information

- NetApp SolidFire Resources Page
- Documentation for earlier versions of NetApp SolidFire and Element products

Uninstall SolidFire eSDS on the node

You can **reset** a node on which you installed SolidFire eSDS by removing SolidFire eSDS on the node. To reinstate SolidFire eSDS on the node, you should perform all the installation steps.

> You can use the `nar_solidfire_sds_uninstall` Ansible role provided by NetApp to perform the operation. If you want to manually remove SolidFire eSDS on the node, see the steps below.

Steps

1. Remove drives from the cluster by using the Element UI or the `RemoveDrives` API method.

   This results in the system migrating data from the node's drives to other drives in the cluster. The time this process takes is dependent on how much data must be migrated.

2. Remove the node from the cluster using either the Element UI or the `RemoveNodes` API method.
3. Use SSH to connect to the node that is removed from the cluster.
4. Remove SolidFire eSDS from the node as follows:

```
yum remove solidfire-element
```

5. Remove persistent data from the directory as follows:

```
rm -rf /opt/sf
```

Find more information

- NetApp SolidFire Resources Page
- Documentation for earlier versions of NetApp SolidFire and Element products

Maintain SolidFire eSDS

Find information about using maintenance mode and replacing the drives in your SolidFire eSDS clusters.

- Get the license key
- Use maintenance mode on SolidFire eSDS clusters
- Replace drives for HPE DL380
- Replace drives for HPE DL360
- Replace drives for Dell R640
- Collect container logs
- Links to troubleshooting KB articles
- Contents of the sf_sds_config.yaml file

Find more information

- NetApp SolidFire Resources Page
- Documentation for earlier versions of NetApp SolidFire and Element products

Get the license key

You should get the license key information for your SolidFire eSDS cluster before you contact NetApp Support for help with troubleshooting issues. The license key for the SolidFire eSDS cluster consists of the cluster's order number combined with the serial number.

You can use the `GetLicenseKey` method to get the license key information for the SolidFire eSDS storage cluster. The `GetLicenseKey` method has no input parameters. This method has the following return values:

Name	Description	Type
`orderNumber`	The new sales order number of the storage cluster.	string
`serialNumber`	The new serial number of the storage cluster.	string

Step

1. Run the `GetLicenseKey` API method as shown in the following example:

   Requests for this method are similar to the following example:

   ```
   {
      "method": "GetLicenseKey",
      "params": {
      },
      "id": 1
   }
   ```

   This method returns a response similar to the following example:

   ```
   {
      "id" : 1,
      "result" : {
         "serialNumber": "30G56E3WV",
         "orderNumber": "33601"
        }
      }
   }
   ```

Find more information

- NetApp SolidFire Resources Page
- Documentation for earlier versions of NetApp SolidFire and Element products

Use maintenance mode on SolidFire eSDS clusters

If you need to take a storage node offline for maintenance such as software upgrades or host repairs, you can minimize the I/O impact to the rest of the storage cluster by enabling maintenance mode for that node.

If you want to verify the current status of maintenance mode on your node, use the `ListActiveNodes` API method. The node object includes a `maintenanceMode` parameter, which indicates the current status of maintenance mode on the node.

Ensure that you do the maintenance as soon as maintenance mode is enabled. Do not leave the node in maintenance mode any more than necessary.

You can transition a storage node to maintenance mode only if the node is healthy (has no blocking cluster faults) and the storage cluster is tolerant to a single node failure. After you enable maintenance mode for a healthy and tolerant node, the node is not immediately transitioned; it is monitored until the following conditions are true:

- All volumes hosted on the node have failed over and the node is no longer hosting as the primary for any volume.
- A temporary standby node is assigned for every volume being failed over.

After these criteria are met, the node is transitioned to maintenance mode. If these criteria are not met within a five-minute period, the node will not enter maintenance mode.

When you disable maintenance mode for a storage node, the node is monitored until the following conditions are true:

- All data is fully replicated to the node.
- All blocking cluster faults are resolved.
- All temporary standby node assignments for the volumes hosted on the node have been inactivated.

After these criteria are met, the node is transitioned out of maintenance mode. If these criteria are not met within one hour, the node will fail to transition out of maintenance mode.

Possible scenarios while using maintenance mode

- If a node is in maintenance mode, but has not been rebooted yet, and/or has not had maintenance occur, or it had maintenance occur and is back up and healthy, but you have not disabled maintenance mode, and another node goes down, maintenance mode on the first node will be disabled automatically.
- If one of your nodes is in maintenance mode, and another node goes down at the same time, there will be an outage. You have to wait till the node that is in maintenance mode comes back online.
- If you put a node that is a member of an ensemble in maintenance mode for a long period of time, the system will automatically remove it from the ensemble, if there are other nodes available to be added in its place.

Enable maintenance mode

You can enable maintenance mode using the `EnableMaintenanceMode` API method. This method has the following input parameters:

Name	Description	Type	Default value	Required
`forceWithUnresolvedFaults`	Force maintenance mode to be enabled for this node even with blocking cluster faults present.	boolean	False	No
`nodes`	The list of node IDs to put in maintenance mode. Only one node at a time is supported.	integer array	None	Yes
`perMinutePrimarySwapLimit`	The number of primary slices to swap per minute. If not specified, all primary slices will be swapped at once.	integer	None	No
`timeout`	Specifies how long maintenance mode should remain enabled before it is automatically disabled. Formatted as a time string (for example, HH:mm:ss). If not specified, maintenance mode will remain enabled until explicitly disabled.	string	None	No

This method has the following return values:

Name	Description	Type
`asyncHandle`	You can use the `GetAsyncResult` method to retrieve this asyncHandle and determine when the maintenance mode transition is complete.	integer

Name	Description	Type
`currentMode`	The current maintenance mode state of the node. Possible values: • Disabled: No maintenance has been requested. • FailedToRecover: The node failed to recover from maintenance mode. • RecoveringFromMaintenance: The node is in the process of recovering from maintenance mode. • PreparingForMaintenance: Actions are being taken to prepare a node to have maintenance performed. • ReadyForMaintenance: The node is ready for maintenance to be performed.	MaintenanceMode (string)
`requestedMode`	The requested maintenance mode state of the node. Possible values: • Disabled: No maintenance has been requested. • FailedToRecover: The node failed to recover from maintenance mode. • RecoveringFromMaintenance: The node is in the process of recovering from maintenance mode. • PreparingForMaintenance: Actions are being taken to prepare a node to have maintenance performed. • ReadyForMaintenance: The node is ready for maintenance to be performed.	MaintenanceMode (string)

Disable maintenance mode

You can disable maintenance mode using the `DisableMaintenanceMode` API method. This method has the following input parameter:

Name	Description	Type	Default value	Required
`nodes`	List of storage node IDs to take out of maintenance mode.	integer array	None	Yes

This method has the following return values:

Name	Description	Type
`asyncHandle`	You can use the `GetAsyncResult` method to retrieve this asyncHandle and determine when the maintenance mode transition is complete.	integer
`currentMode`	The current maintenance mode state of the node. Possible values: • Disabled: No maintenance has been requested. • FailedToRecover: The node failed to recover from maintenance mode. • Unexpected: The node was found to be offline, but was in the Disabled mode. • RecoveringFromMaintenance: The node is in the process of recovering from maintenance mode. • PreparingForMaintenance: Actions are being taken to prepare a node to have maintenance performed. • ReadyForMaintenance: The node is ready for maintenance to be performed.	MaintenanceMode (string)

Name	Description	Type
`requestedMode`	The requested maintenance mode state of the node. Possible values: • Disabled: No maintenance has been requested. • FailedToRecover: The node failed to recover from maintenance mode. • Unexpected: The node was found to be offline, but was in the Disabled mode. • RecoveringFromMaintenance: The node is in the process of recovering from maintenance mode. • PreparingForMaintenance: Actions are being taken to prepare a node to have maintenance performed. • ReadyForMaintenance: The node is ready for maintenance to be performed.	MaintenanceMode (string)

Find more information

- NetApp SolidFire Resources Page
- Documentation for earlier versions of NetApp SolidFire and Element products

Replace drives for HPE DL360

Choose from the procedures listed here to replace a drive proactively, replace a drive after it has failed, and replace a cache drive. replace a metadata drive or a block drive in your SolidFire eSDS cluster. The Element UI **Cluster > Drives** page shows the drive wear information.

- Replace a drive proactively
- Replace a faulty drive
- Replace a cache drive

Replace a drive proactively

Perform this procedure if you want to proactively replace a metadata drive or a block drive in your SolidFire eSDS cluster. The Element UI **Cluster** > **Drives** page shows the drive wear information.

What you'll need

- From the NetApp Element software UI, ensure that your cluster is in good health and there are no warnings or cluster faults. You can access the Element UI by using the management virtual IP (MVIP) address of the

primary cluster node.

- Ensure that there are no active jobs running on the cluster.
- Ensure that you have familiarized yourself with all the steps.
- Ensure that you take necessary precautions to prevent electrostatic discharge (ESD) while handling drives.

Steps

1. Perform the following steps in the Element UI:
   a. In the Element UI, select **Cluster** > **Drives** > **Active**.
   b. Select the drive that you want to replace.
   c. Make a note of the serial number of the drive. This will help you locate the corresponding BayID in the IPMI interface of the node (HPE Integrated Lights-Out or iLO, in this case).
   d. Select **Bulk Actions** > **Remove**. After you remove the drive, the drive goes into the **Removing** state. It stays in the **Removing** state for a while, waiting for the data on the drive to be synced or redistributed to the remaining drives in the cluster. After the remove is complete, the drive moves to the **Available** state.
2. Perform the following steps to locate the drive slot of the drive that you are replacing:
   a. Log in to the IPMI interface of the node (iLO in this case).
   b. Select **System Information** from the left-hand navigation, and then select **Storage**.
   c. Match the serial number you made a note of in the previous step with what you see on the screen.
   d. Look for the slot number listed against the serial number. This is the physical slot from which you must remove the drive.
3. Now that you have identified the drive, physically remove it as follows:
   a. Identify the drive bay.

      The following image shows the front of the server with the drive bay numbering shown on the left side of the image:

   b. Press the power button on the drive that you want to replace. The LED blinks for 5-10 seconds and stops.
   c. After the LED stops blinking and the drive is powered off, remove it from the server by pressing the red button and pulling the latch.

      Ensure that you handle drives very carefully.

      After you physically remove the drive, the drive state changes to **Failed** in the Element UI.
4. In the Element UI, select **Cluster** > **Drives** > **Failed**.
5. Select the icon under **Actions**, and then select **Remove**.

   Now you can go ahead and install the new drive in the node.
6. Make a note of the serial number of the new drive.

7. Insert the replacement drive by carefully pushing the drive into the bay using the latch and closing the latch. The drive powers on when inserted correctly.
8. Perform the following steps to verify the new drive details in iLO:
   a. Log in to iLO.
   b. Select **Information** > **Integrated Management Log**. You will see an event logged for the drive that you added.
   c. Select **System Information** from the left-hand navigation, and then select **Storage**.
   d. Scroll till you find information about the bay that you replaced the drive in.
   e. Verify that the serial number on your screen matches the serial number of the new drive that you replaced.
9. Add the new drive information in the `sf_sds_config.yaml` file for the node in which you replaced the drive.

   The `sf_sds_config.yaml` file is stored in `/opt/sf/`. This file includes all the information about the drives in the node. Every time you replace a drive, you must enter the replacement drive information in this file. For more information about this file, see Contents of the sf_sds_config.yaml file.

   a. Establish an SSH connection to the node by using PuTTY.
   b. In the PuTTY configuration window, enter node MIP in the **Host Name (or IP address)** field.
   c. Select **Open**.
   d. In the terminal window that opens, log in with your username and password.
   e. Run the `# cat /opt/sf/sf_sds_config.yaml` command to list the contents of the file.
   f. Replace the entries in the `dataDevices` or `cacheDevices` lists for the drive you replaced with the new drive information.
   g. Run `# systemctl start solidfire-update-drives`.

      You see the Bash prompt after this command runs. You should go to the Element UI after this to add the drive to the cluster. The Element UI shows an alert for a new drive that is available.
10. Select **Cluster** > **Drives** > **Available**.

    You see the serial number of the new drive that you installed.
11. Select the icon under **Actions**, and then select **Add**.
12. Refresh the Element UI after the block sync job completes. You see that the alert about the drive available has cleared if you access the **Running Tasks** page from the **Reporting** tab of the Element UI.

Replace a faulty drive

If your SolidFire eSDS cluster has a faulty drive, the Element UI displays an alert. Before you remove the drive from the cluster, verify the reason for failure by looking at the information in the IPMI interface for your node/server. These steps are applicable if you are replacing a block drive or a metadata drive.

What you'll need

- From the NetApp Element software UI, verify that the drive has failed. Element displays an alert when a drive fails. You can access the Element UI by using the management virtual IP (MVIP) address of the primary cluster node.

- Ensure that you have familiarized yourself with all the steps.
- Ensure that you take necessary precautions to prevent electrostatic discharge (ESD) while handling drives.

Steps

1. Remove the failed drive from the cluster as follows using the Element UI:
   a. Select **Cluster** > **Drives** > **Failed**.
   b. Note the node name and serial number associated with the failed drive.
   c. Select the icon under **Actions**, and then select **Remove**. If you see warnings of the service associated with the drive, wait until bin sync completes, and then remove the drive.
2. Perform the following steps to verify the drive failure and view the events logged that are associated with the drive failure:
   a. Log in to the IPMI interface of the node (iLO in this case).
   b. Select **Information** > **Integrated Management Log**. The reason for the drive failure (for example, SSDWearOut) and the location is listed here. You can also see an event stating that the status of the drive is degraded.
   c. Select **System Information** from the left-hand navigation, and then select **Storage**.
   d. Verify the information available about the failed drive. The status of the failed drive will say **Degraded**.
3. Remove the drive physically as follows:
   a. Identify the drive slot number in the chassis.

      The following image shows the front of the server with the drive bay numbering shown on the left side of the image:

   b. Press the power button on the drive that you want to replace. The LED blinks for 5-10 seconds and stops.
   c. After the LED stops blinking and the drive is powered off, remove it from the server by pressing the red button and pulling the latch.

      Ensure that you handle drives very carefully.

4. Insert the replacement drive by carefully pushing the drive into the bay using the latch and closing the latch. The drive powers on when inserted correctly.
5. Verify the new drive details in iLO:
   a. Select **Information** > **Integrated Management Log**. You see an event logged for the drive that you added.
   b. Refresh the page to see the events logged for the new drive that you added.
6. Verify the health of your storage system in iLO:
   a. Select **System Information** from the left-hand navigation, and then select **Storage**.
   b. Scroll till you find information about the bay in which you installed the new drive.
   c. Make a note of the serial number.

7. Add the new drive information in the `sf_sds_config.yaml` file for the node in which you replaced the drive.

   The `sf_sds_config.yaml` file is stored in `/opt/sf/`. This file includes all the information about the drives in the node. Every time you replace a drive, you must enter the replacement drive information in this file. For more information about this file, see Contents of the sf_sds_config.yaml file.

   a. Establish an SSH connection to the node by using PuTTY.
   b. In the PuTTY configuration window, enter node MIP in the **Host Name (or IP address)** field.
   c. Select **Open**.
   d. In the terminal window that opens, log in with your username and password.
   e. Run the `# cat /opt/sf/sf_sds_config.yaml` command to list the contents of the file.
   f. Replace the entries in the `dataDevices` or `cacheDevices` lists for the drive you replaced with the new drive information.
   g. Run `# systemctl start solidfire-update-drives`.

      You see the Bash prompt after this command runs. You should go to the Element UI after this to add the drive to the cluster. The Element UI shows an alert for a new drive that is available.

8. Select **Cluster** > **Drives** > **Available**.

   You see the serial number of the new drive that you installed.

9. Select the icon under **Actions**, and then select **Add**.
10. Refresh the Element UI after the block sync job completes. You see that the alert about the drive available has cleared if you access the **Running Tasks** page from the **Reporting** tab of the Element UI.

Replace a cache drive

Perform this procedure if you want to replace the cache drive in your SolidFire eSDS cluster. The cache drive is associated with metadata services. The Element UI **Cluster** > **Drives** page shows the drive wear information.

What you'll need

- From the NetApp Element software UI, ensure that your cluster is in good health and there are no warnings or cluster faults. You can access the Element UI by using the management virtual IP (MVIP) address of the primary cluster node.
- Ensure that there are no active jobs running on the cluster.
- Ensure that you have familiarized yourself with all the steps.
- Ensure that you remove metadata services from the Element UI.
- Ensure that you take necessary precautions to prevent electrostatic discharge (ESD) while handling drives.

Steps

1. Perform the following steps in the Element UI:
   a. In the Element UI, select **Cluster** > **Nodes** > **Active**.
   b. Make a note of the node ID and management IP address of the node in which you are replacing the cache drive.

c. If the cache drive is healthy and you are proactively replacing it, select **Active Drives**, locate the metadata drive, and remove it from the UI.

   After you remove it, the metadata drive goes to **Removing** state first, and then to **Available**.

d. If you are performing replacement after the cache drive failed, the metadata drive will be in **Available** state, and listed under **Cluster** > **Drives** > **Available**.

e. In the Element UI, select **Cluster** > **Drives** > **Active**.

f. Select the metadata drive associated with the NodeName, where you want to do the cache drive replacement.

g. Select **Bulk Actions** > **Remove**. After you remove the drive, the drive goes into the **Removing** state. It stays in the **Removing** state for a while, waiting for the data on the drive to be synced or redistributed to the remaining drives in the cluster. After the remove is complete, the drive moves to the **Available** state.

2. Perform the following steps to locate the drive slot of the cache drive that you are replacing:

   a. Log in to the IPMI interface of the node (iLO in this case).

   b. Select **System Information** from the left-hand navigation, and then select **Storage**.

   c. Locate the cache drive.

   > Cache drives are of lesser capacity than storage drives.

   d. Look for the slot number listed for cache drive. This is the physical slot from which you must remove the drive.

3. Now that you have identified the drive, physically remove it as follows:

   a. Identify the drive bay.

      The following image shows the front of the server with the drive bay numbering shown on the left side of the image:

   b. Press the power button on the drive that you want to replace. The LED blinks for 5-10 seconds and stops.

   c. After the LED stops blinking and the drive is powered off, remove it from the server by pressing the red button and pulling the latch.

   > Ensure that you handle drives very carefully.

      After you physically remove the drive, the drive state changes to **Failed** in the Element UI.

4. Make a note of the HPE model number and the ISN (serial number) of the new cache drive.

5. Insert the replacement drive by carefully pushing the drive into the bay using the latch and closing the latch. The drive powers on when inserted correctly.

6. Perform the following steps to verify the new drive details in iLO:

   a. Log in to iLO.

b. Select **Information** > **Integrated Management Log**. You see an event logged for the drive that you added.

c. Select **System Information** from the left-hand navigation, and then select **Storage**.

d. Scroll till you find information about the bay that you replaced the drive in.

e. Verify that the serial number on your screen matches the serial number of the new drive that you installed.

7. Add the new cache drive information in the `sf_sds_config.yaml` file for the node in which you replaced the drive.

   The `sf_sds_config.yaml` file is stored in `/opt/sf/`. This file includes all the information about the drives in the node. Every time you replace a drive, you should enter the replacement drive information in this file. For more information about this file, see Contents of the sf_sds_config.yaml file.

   a. Establish an SSH connection to the node by using PuTTY.

   b. In the PuTTY configuration window, enter node MIP address (that you made a note of from the Element UI earlier) in the **Host Name (or IP address)** field.

   c. Select **Open**.

   d. In the terminal window that opens, log in with your username and password.

   e. Run the `nvme list` command to list the NMVe devices.

      You can see the model number and serial number of the new cache drive. See the following sample output:

```
[root@NLABICT062226 ~]# nvme list
Node             SN                   Model                                    Namespace Usage
---------------- -------------------- ---------------------------------------- --------- --------------------------
/dev/nvme0n1     KI9AN0136I020AU17    VK003840KWWFP                            1           3.84  TB /   3.84  TB
/dev/nvme10n1    PHKE913200XM375AGN   EO0003750WJUC                            1         375.08  GB / 375.08  GB
/dev/nvme1n1     KI9AN0136I02AAU0Q    VK003840KWWFP                            1           3.84  TB /   3.84  TB
/dev/nvme2n1     KI05T0003I1205C14    VK003840KWWFP                            1           3.84  TB /   3.84  TB
/dev/nvme3n1     KI05T0003I1205C0W    VK003840KWWFP                            1           3.84  TB /   3.84  TB
/dev/nvme4n1     KI05T0003I1205C1O    VK003840KWWFP                            1           3.84  TB /   3.84  TB
/dev/nvme5n1     KI05T0003I1205C1P    VK003840KWWFP                            1           3.84  TB /   3.84  TB
/dev/nvme7n1     KI05T0003I1205C1L    VK003840KWWFP                            1           3.84  TB /   3.84  TB
/dev/nvme8n1     KI05T0003I1205C13    VK003840KWWFP                            1           3.84  TB /   3.84  TB
/dev/nvme9n1     KI9AN0136I02AAU1Q    VK003840KWWFP                            1           3.84  TB /   3.84  TB
[root@NLABICT062226 ~]#
```

   f. Add the new cache drive information in `/opt/sf/sf_sds_config.yaml`.

      You should replace the existing cache drive model number and serial number with the corresponding information for the new cache drive. See the following example:

```
schemaVersion: "2.0"

network:
  managementInterface: "team1G"
  storageInterface: "team10G"
dataDrives:
  - "/dev/nvme0n1"
  - "/dev/nvme1n1"
  - "/dev/nvme2n1"
  - "/dev/nvme3n1"
  - "/dev/nvme4n1"
  - "/dev/nvme5n1"
  - "/dev/nvme7n1"
  - "/dev/nvme8n1"
  - "/dev/nvme9n1"
cacheDevices:
  - "/dev/disk/by-id/nvme-EO000375KWJUC_PHKE913200XM375AGN"
```

Model number

Serial number

g. Save the `/opt/sf/sf_sds_config.yaml` file.

8. Perform the steps for the scenario that is applicable to you:

Scenario	Steps
The new inserted cache drive shows up after you run the `nvme list` command	1. Run `# systemctl restart solidfire`. This takes around three minutes. 2. Check the `solidfire` status by running `system status solidfire`. 3. Go to step 9.
The new inserted cache drive does not show up after you run the `nvme list` command	1. Reboot the node. 2. After the node reboots, verify that the `solidfire` services are running by logging in to the node (using PuTTY), and running the `system status solidfire` command. 3. Go to step 9.

> Restarting `solidfire` or rebooting the node causes some cluster faults, which eventually clear in about five minutes.

9. In the Element UI, add back the metadata drive that you removed:
   a. Select **Cluster** > **Drives** > **Available**.
   b. Select the icon under Actions, and select **Add**.
10. Refresh your Element UI after the block sync job completes.

    You can see that the alert about the drive available has cleared along with other cluster faults.

Find more information

- NetApp SolidFire Resources Page
- Documentation for earlier versions of NetApp SolidFire and Element products

Replace drives for Dell R640

Choose from the procedures listed here to replace a drive proactively, replace a drive after it has failed, and replace a cache drive. replace a metadata drive or a block drive in your SolidFire eSDS cluster. The Element UI **Cluster > Drives** page shows the drive wear information.

- Replace a drive proactively
- Replace a faulty drive
- Replace a cache drive

Replace a drive proactively

Perform this procedure if you want to proactively replace a metadata drive or a block drive in your SolidFire eSDS cluster. The Element UI **Cluster** > **Drives** page shows the drive wear information.

What you'll need

- From the NetApp Element software UI, ensure that your cluster is in good health and there are no warnings or cluster faults. You can access the Element UI by using the management virtual IP (MVIP) address of the primary cluster node.
- Ensure that there are no active jobs running on the cluster.
- Ensure that you have familiarized yourself with all the steps.
- Ensure that you take necessary precautions to prevent electrostatic discharge (ESD) while handling drives.

Steps

1. Perform the following steps in the Element UI:
   a. In the Element UI, select **Cluster** > **Drives** > **Active**.
   b. Select the drive that you want to replace.
   c. Make a note of the serial number of the drive. This will help you locate the corresponding slot number of the drive in the Integrated Dell Remote Access Controller (iDRAC).
   d. Select **Bulk Actions** > **Remove**. After you remove the drive, the drive goes into the **Removing** state. It stays in the **Removing** state for a while, waiting for the data on the drive to be synced or redistributed to the remaining drives in the cluster. After the remove is complete, the drive moves to the **Available** state.
2. Perform the following steps to locate the drive slot of the drive that you are replacing:
   a. Log in to the IPMI interface of the node (iDRAC in this case).
   b. Select **Storage** from the menu, and then select **Physical Disks**.
   c. To find the serial number of the drive, select the **+** icon next to each PCIe SSD.
   d. Match the serial number you see on the screen with what you noted in the Element UI.
   e. Look for the slot number listed against the serial number.

This is the physical slot from which you should remove the drive.

3. Now that you have identified the drive, physically remove it as follows:
   a. Identify the drive slot number in the chassis.

      The following image shows the front of the server with the slot numbering shown for each drive:

   b. Press the button on the drive.

      The latch comes out.

   c. Physically pull the drive out from the slot.

      Ensure that you handle drives very carefully.

      After you physically remove the drive, the drive state changes to **Failed** in the Element UI.

4. In the Element UI, select **Cluster** > **Drives** > **Failed**.
5. Select the icon under **Actions**, and then select **Remove**.

   Now you can go ahead and install the new drive in the node.

6. Make a note of the serial number of the new drive.
7. Insert the replacement drive by carefully pushing the drive into the bay using the latch and closing the latch. The drive powers on when inserted correctly.
8. Perform the following steps to verify the new drive details in iDRAC:
   a. Log in to iDRAC.
   b. Select **Maintenance** > **System Event Log**.

      You see an event logged for the drive that you added.

   c. Select **Storage** from the menu, and then select **Physical Disks**.
   d. Verify that the new drive you inserted shows up in the corresponding slot in the UI.
   e. To find the serial number of the drive, select the **+** icon next to each PCIe SSD.
9. Add the new drive information in the `sf_sds_config.yaml` file for the node in which you replaced the drive.

   The `sf_sds_config.yaml` file is stored in `/opt/sf/`. This file includes all the information about the drives in the node. Every time you replace a drive, you must enter the replacement drive information in this file. For more information about this file, see Contents of the sf_sds_config.yaml file.

   a. Establish an SSH connection to the node by using PuTTY.
   b. In the PuTTY configuration window, enter node MIP in the **Host Name (or IP address)** field.
   c. Select **Open**.
   d. In the terminal window that opens, log in with your username and password.

e. Run the `# cat /opt/sf/sf_sds_config.yaml` command to list the contents of the file.

f. Replace the entries in the `dataDevices` or `cacheDevices` lists for the drive you replaced with the new drive information.

g. Run `# systemctl start solidfire-update-drives`.

   You see the Bash prompt after this command runs. You should go to the Element UI after this to add the drive to the cluster. The Element UI shows an alert for a new drive that is available.

10. Select **Cluster** > **Drives** > **Available**.

    You see the serial number of the new drive that you installed.

11. Select the icon under **Actions**, and then select **Add**.
12. Refresh the Element UI after the block sync job completes. You see that the alert about the drive available has cleared if you access the **Running Tasks** page from the **Reporting** tab of the Element UI.

Replace a faulty drive

If your SolidFire eSDS cluster has a faulty drive, the Element UI displays an alert. Before you remove the drive from the cluster, verify the reason for failure by looking at the information in the IPMI interface for your node/server. These steps are applicable if you are replacing a block drive or a metadata drive.

What you'll need

- From the NetApp Element software UI, verify that the drive has failed. Element displays an alert when a drive fails. You can access the Element UI by using the management virtual IP (MVIP) address of the primary cluster node.
- Ensure that you have familiarized yourself with all the steps.
- Ensure that you take necessary precautions to prevent electrostatic discharge (ESD) while handling drives.

Steps

1. Remove the failed drive from the cluster as follows using the Element UI:
   a. Select **Cluster** > **Drives** > **Failed**.
   b. Note the node name and serial number associated with the failed drive.
   c. Select the icon under **Actions**, and then select **Remove**. If you see warnings of the service associated with the drive, wait until bin sync completes, and then remove the drive.
2. Perform the following steps to verify the drive failure and view the events logged that are associated with the drive failure:
   a. Log in to the IPMI interface of the node (IDRAC in this case).
   b. Select **Maintenance** > **System Event Log** to see the reason for the drive failure (for example, SSDWearOut or drive not inserted properly).

      You can also see an event showing the status of the drive.

   c. Select **Storage** from the menu, and then select **Physical Disks**.
   d. Find the slot number of the failed drive using the serial number that you noted in the Element UI.
3. Remove the drive physically as follows:
   a. Identify the drive slot number in the chassis.

The following image shows the front of the server with the slot numbering shown for each drive:

b. Press the button on the drive.

   The latch comes out.

c. Physically pull the drive out from the slot.

   Ensure that you handle drives very carefully.

4. Insert the replacement drive by carefully pushing the drive into the slot using the latch and closing the latch.

   The drive powers on when inserted correctly.

5. Verify the new drive details in iDRAC:
   a. Select **Maintenance** > **System Event Log**. You see an event logged for the drive that you added.
   b. Select **Storage** from the menu, and then select **Physical Disks**.
   c. Verify that the new drive you inserted shows up in the corresponding slot in the UI.
   d. To find the serial number of the drive, select the **+** icon next to each PCIe SSD.
6. Add the new drive information in the `sf_sds_config.yaml` file for the node in which you replaced the drive.

   The `sf_sds_config.yaml` file is stored in `/opt/sf/`. This file includes all the information about the drives in the node. Every time you replace a drive, you must enter the replacement drive information in this file. For more information about this file, see Contents of the sf_sds_config.yaml file.

   a. Establish an SSH connection to the node by using PuTTY.
   b. In the PuTTY configuration window, enter node MIP in the **Host Name (or IP address)** field.
   c. Select **Open**.
   d. In the terminal window that opens, log in with your username and password.
   e. Run the `# cat /opt/sf/sf_sds_config.yaml` command to list the contents of the file.
   f. Replace the entries in the `dataDevices` or `cacheDevices` lists for the drive you replaced with the new drive information.
   g. Run `# systemctl start solidfire-update-drives`.

      You see the Bash prompt after this command runs. You should go to the Element UI after this to add the drive to the cluster. The Element UI shows an alert for a new drive that is available.
7. Select **Cluster** > **Drives** > **Available**.

   You see the serial number of the new drive that you installed.

8. Select the icon under **Actions**, and then select **Add**.
9. Refresh the Element UI after the block sync job completes. You see that the alert about the drive available has cleared if you access the **Running Tasks** page from the **Reporting** tab of the Element UI.

Replace a cache drive

Perform this procedure if you want to replace the cache drive in your SolidFire eSDS cluster. The cache drive is associated with metadata services. The Element UI **Cluster** > **Drives** page shows the drive wear information.

What you'll need

- From the NetApp Element software UI, ensure that your cluster is in good health and there are no warnings or cluster faults. You can access the Element UI by using the management virtual IP (MVIP) address of the primary cluster node.
- Ensure that there are no active jobs running on the cluster.
- Ensure that you have familiarized yourself with all the steps.
- Ensure that you remove metadata services from the Element UI.
- Ensure that you take necessary precautions to prevent electrostatic discharge (ESD) while handling drives.

Steps

1. Perform the following steps in the Element UI:
   a. In the Element UI, select **Cluster** > **Nodes** > **Active**.
   b. Make a note of the node ID and management IP address of the node in which you are replacing the cache drive.
   c. If the cache drive is healthy and you are proactively replacing it, select **Active Drives**, locate the metadata drive, and remove it from the UI.

      After you remove it, the metadata drive goes to **Removing** state first, and then to **Available**.

   d. If you are performing replacement after the cache drive failed, the metadata drive will be in **Available** state, and listed under **Cluster** > **Drives** > **Available**.
   e. In the Element UI, select **Cluster** > **Drives** > **Active**.
   f. Select the metadata drive associated with the NodeName, where you want to do the cache drive replacement.
   g. Select **Bulk Actions** > **Remove**. After you remove the drive, the drive goes into the **Removing** state. It stays in the **Removing** state for a while, waiting for the data on the drive to be synced or redistributed to the remaining drives in the cluster. After the remove is complete, the drive moves to the **Available** state.
2. Perform the following steps to locate the drive slot of the cache drive that you are replacing:
   a. Log in to the IPMI interface of the node (iDRAC in this case).
   b. Select **Storage** from the menu, and then select **Physical Disks**.
   c. Locate the cache drive.

      Cache drives are of lesser capacity (375 GB) than storage drives, and are PCIe SSDs.

   d. Look for the slot number listed for cache drive.

      This is the physical slot from which you should remove the drive.

3. Now that you have identified the drive, physically remove it as follows:
   a. Identify the drive slot number in the chassis.

The following image shows the front of the server with the slot numbering shown for each drive:

b. Press the button on the drive.

   The latch comes out.

c. Physically pull the drive out from the slot.

   > Ensure that you handle drives very carefully.

   After you physically remove the drive, the drive state changes to **Failed** in the Element UI.

4. Make a note of the model number and the ISN (serial number) of the new cache drive.
5. Insert the replacement drive by carefully pushing the drive into the slot using the latch and closing the latch.

   The drive powers on when inserted correctly.

6. Perform the following steps to verify the new drive details in iDRAC:
   a. Select **Maintenance** > **System Event Log**. You see an event logged for the drive that you added.
   b. Select **Storage** from the menu, and then select **Physical Disks**.
   c. Verify that the new drive you inserted shows up in the corresponding slot in the UI.
   d. To find the serial number of the drive, select the **+** icon next to each PCIe SSD.
7. Add the new cache drive information in the `sf_sds_config.yaml` file for the node in which you replaced the drive.

   The `sf_sds_config.yaml` file is stored in `/opt/sf/`. This file includes all the information about the drives in the node. Every time you replace a drive, you should enter the replacement drive information in this file. For more information about this file, see Contents of the sf_sds_config.yaml file.

   a. Establish an SSH connection to the node by using PuTTY.
   b. In the PuTTY configuration window, enter node MIP address (that you made a note of from the Element UI earlier) in the **Host Name (or IP address)** field.
   c. Select **Open**.
   d. In the terminal window that opens, log in with your username and password.
   e. Run the `nvme list` command to list the NMVe devices.

      You can see the model number and serial number of the new cache drive. See the following sample output:

```
Node             SN                   Model                                    Namespace Usage                      Format           FW Rev
---------------- -------------------- ---------------------------------------- --------- -------------------------- ---------------- --------
/dev/nvme0n1     PHLJ029506A54P0DGN   INTEL SSDPE2KX040T8                      1           4.00  TB /   4.00  TB    512   B +  0 B   VDV10131
/dev/nvme1n1     PHKE91400006375AGN   INTEL SSDPE21K375GA                      1         375.08  GB / 375.08  GB    512   B +  0 B   E2010435
/dev/nvme2n1     PHLJ030004VJ4P0DGN   INTEL SSDPE2KX040T8                      1           4.00  TB /   4.00  TB    512   B +  0 B   VDV10131
/dev/nvme3n1     PHLJ029507NB4P0DGN   INTEL SSDPE2KX040T8                      1           4.00  TB /   4.00  TB    512   B +  0 B   VDV10131
/dev/nvme4n1     PHLJ030004W84P0DGN   INTEL SSDPE2KX040T8                      1           4.00  TB /   4.00  TB    512   B +  0 B   VDV10131
/dev/nvme5n1     PHLJ030101RS4P0DGN   INTEL SSDPE2KX040T8                      1           4.00  TB /   4.00  TB    512   B +  0 B   VDV10131
/dev/nvme6n1     PHLJ029509QX4P0DGN   INTEL SSDPE2KX040T8                      1           4.00  TB /   4.00  TB    512   B +  0 B   VDV10131
/dev/nvme7n1     PHLJ030101S44P0DGN   INTEL SSDPE2KX040T8                      1           4.00  TB /   4.00  TB    512   B +  0 B   VDV10131
/dev/nvme8n1     PHLJ029509QZ4P0DGN   INTEL SSDPE2KX040T8                      1           4.00  TB /   4.00  TB    512   B +  0 B   VDV10131
/dev/nvme9n1     PHLJ030101RW4P0DGN   INTEL SSDPE2KX040T8                      1           4.00  TB /   4.00  TB    512   B +  0 B   VDV10131
```

f. Add the new cache drive information in `/opt/sf/sf_sds_config.yaml`.

You should replace the existing cache drive model number and serial number with the corresponding information for the new cache drive. See the following example:

```
schemaVersion: "2.0"

network:
  managementInterface: "team0"
  storageInterface: "team1"
dataDrives:
  - "/dev/nvme0n1"
  - "/dev/nvme2n1"
  - "/dev/nvme3n1"
  - "/dev/nvme4n1"
  - "/dev/nvme5n1"
  - "/dev/nvme6n1"
  - "/dev/nvme7n1"
  - "/dev/nvme8n1"
  - "/dev/nvme9n1"
cacheDevices:
  - "/dev/disk/by-id/nvme-INTEL_SSDPE21K375GA_PHKE913200Z3375AGN"
```

Model number

Serial number

g. Save the `/opt/sf/sf_sds_config.yaml` file.

8. Perform the steps for the scenario that is applicable to you:

Scenario	Steps
The new inserted cache drive shows up after you run the `nvme list` command	1. Run `# systemctl restart solidfire`. This takes around three minutes. 2. Check the `solidfire` status by running `system status solidfire`. 3. Go to step 9.
The new inserted cache drive does not show up after you run the `nvme list` command	1. Reboot the node. 2. After the node reboots, verify that the `solidfire` services are running by logging in to the node (using PuTTY), and running the `system status solidfire` command. 3. Go to step 9.

Restarting `solidfire` or rebooting the node causes some cluster faults, which eventually clear in about five minutes.

9. In the Element UI, add back the metadata drive that you removed:

a. Select **Cluster** > **Drives** > **Available**.

b. Select the icon under Actions, and select **Add**.

10. Refresh your Element UI after the block sync job completes.

    You can see that the alert about the drive available has cleared along with other cluster faults.

Find more information

- NetApp SolidFire Resources Page
- Documentation for earlier versions of NetApp SolidFire and Element products

Collect container logs

Learn more about the SolidFire eSDS containers and where to get the logs associated with them. The information provided here is to help you get started with collecting logs for troubleshooting. It is best to engage NetApp Support, where trained engineers well versed with log analysis can help resolve issues.

SolidFire eSDS includes the following containers:

- Element container (`element`): Hosts all of the Element services in a single container.
- Element auth container (`element_auth`): Provides multifactor authentication (MFA) and session authentication tokens for the management UIs.
- Network watchdog container (`sfnetwd`): Provides heartbeat monitoring of the local Element instance and failover of the virtual IPs (MVIP and SVIP).

To access the containers on an eSDS node via SSH, the owner of the node should enable SSH and provide the login credentials. After you have SSH access to the host system, you can check the status of one or more containers by using the `podman ps` command. See the example below:

```
# podman ps
CONTAINER ID IMAGE COMMAND CREATED STATUS PORTS NAMES
f6b8817c024a localhost/solidfire-element:12.2.0.777 --config /sf/etc/...
11 seconds ago Up 10 seconds ago sfnetwd
c3fed6141259 localhost/solidfire-auth:12.2.0.777 --config /sf/etc/... 11
seconds ago Up 11 seconds ago element_auth
1ffa8289c701 localhost/solidfire-element:12.2.0.777 --config /sf/etc/...
12 seconds ago Up 12 seconds ago element
#
```

> If one of the containers is not up or running, do not use Podman to directly control (stop or start) the containers. Element software is controlled via the `solidfire systemd` service unit. This service uses `elementctl` to orchestrate the software running in the three Element containers. Using `systemctl` to control the Solidfire service on the host is the recommended and supported way to start and stop Element software on any node; however, doing so on a live cluster should be only done under the guidance from Support.

All of the logs related to SolidFire eSDS can be found in `/var/log/solidfire/` on the host, which is persisted across container instances. This directory contains the logs from the Element container, and contains

the `element_auth/` and `sfnetwd/` subdirectories, which contain the logs from the `element_auth` and `sfnetwd` containers, respectively. From inside a container, you can access container-specific logs at `/var/log`.

Use the NetApp Hybrid Cloud Control UI to collect logs

You can collect logs to send to NetApp Support to help with diagnosing issues with your SolidFire eSDS clusters.

Keep the following considerations in mind for collecting logs:

- Do not use Podman commands to gather logs.
- NetApp Support uses One Collect for host log collection. For an optimal support experience, you should have installed One Collect.

Steps

1. Open the IP address of the management node in a web browser. For example:

   ```
   https://[management node IP address]
   ```

2. Log in to NetApp Hybrid Cloud Control by providing the storage cluster administrator credentials.
3. From the Dashboard, select the menu on the upper right.
4. Select **Collect Logs**.
5. Select a date range in the **Date Range** drop-down menu to specify what dates the logs should include.

   If you specify a custom start date, you can select the date to begin the date range. Logs will be collected from that date up to the present time.

6. In the **Log Collection** section, select the storage cluster or specific storage nodes.
7. Select **Collect Logs** to start log collection.

   Log collection runs in the background, and the page shows the progress.

   > Depending on the logs you collect, the progress bar might remain at a certain percentage for several minutes, or progress very slowly at some points.

8. Select **Download Logs** to download the log package.

   The log package is in a compressed UNIX `.tgz` file format.

Find more information

- NetApp SolidFire Resources Page
- Documentation for earlier versions of NetApp SolidFire and Element products

Links to troubleshooting KB articles

Find the links to the knowledgebase articles for help with troubleshooting your SolidFire

eSDS system.

- How to make interface names the same for all the nodes in a cluster (login required)
- How to change the MTU size (login required)
- How to resolve Podman container crash issues (login required)
- How to disable IPv6 for SolidFire eSDS (login required)
- How to change the bonded interfaces on an eSDS cluster while in Production (login required)

This is not a comprehensive list. You can search the Knowledgebase for more articles.

Find more information

- NetApp SolidFire Resources Page
- Documentation for earlier versions of NetApp SolidFire and Element products

Contents of the `sf_sds_config.yaml` file

Every node has a `sf_sds_config.yaml` file, which includes the list of hardware that you specify to be consumed by the SolidFire eSDS services. After you replace a drive, you should add the replacement drive information in this file for the node you replaced the drive from. This file is stored in `/opt/sf/`. This file includes all the information about the drives in the node. You should enter the details of the new drive in this file every time you add a new drive.

Here are the **required** contents of the file:

Key	Default	Type	Description
schemaVersion	"2.0"	String	The schema version number for the file.
network	N/A	List	Allowed values: managementInterface,storageInterface
managementInterface	"team0"	String	The name of the pre-configured, redundant, host OS network interface to use for management and cluster management traffic.
storageInterface	"team1"	String	The name of the pre-configured, redundant, host OS network interface to use for storage network traffic (iSCSI traffic).

Key	Default	Type	Description
dataDrives	N/A	List	The list of host OS paths to physical storage devices being used by SolidFire eSDS. You can specify this as complete paths to the block or NVME devices. The following are supported complete path examples: /dev/disk/by-id/wwn-xxxx-xxxx-EXAMPLE, /dev/disk/by-uuid/nvme-xxxx-xxxxx-EXAMPLE, and /dev/sda1
cacheDevices	N/A	List	The host OS path to the physical device being used as the cache device by SolidFire eSDS. You should specify it as a list entry. The following is an example of a supported complete path: /dev/disk/by-id/nvme-nvme.8086-XXXXXXX-XXXXX-XXXXXX-EXAMPLE

Find more information

- NetApp SolidFire Resources Page
- Documentation for earlier versions of NetApp SolidFire and Element products

Copyright Information

Copyright © 2022 NetApp, Inc. All rights reserved. Printed in the U.S. No part of this document covered by copyright may be reproduced in any form or by any means-graphic, electronic, or mechanical, including photocopying, recording, taping, or storage in an electronic retrieval system- without prior written permission of the copyright owner.

Software derived from copyrighted NetApp material is subject to the following license and disclaimer:

THIS SOFTWARE IS PROVIDED BY NETAPP “AS IS” AND WITHOUT ANY EXPRESS OR IMPLIED WARRANTIES, INCLUDING, BUT NOT LIMITED TO, THE IMPLIED WARRANTIES OF MERCHANTABILITY AND FITNESS FOR A PARTICULAR PURPOSE, WHICH ARE HEREBY DISCLAIMED. IN NO EVENT SHALL NETAPP BE LIABLE FOR ANY DIRECT, INDIRECT, INCIDENTAL, SPECIAL, EXEMPLARY, OR CONSEQUENTIAL DAMAGES (INCLUDING, BUT NOT LIMITED TO, PROCUREMENT OF SUBSTITUTE GOODS OR SERVICES; LOSS OF USE, DATA, OR PROFITS; OR BUSINESS INTERRUPTION) HOWEVER CAUSED AND ON ANY THEORY OF LIABILITY, WHETHER IN CONTRACT, STRICT LIABILITY, OR TORT (INCLUDING NEGLIGENCE OR OTHERWISE) ARISING IN ANY WAY OUT OF THE USE OF THIS SOFTWARE, EVEN IF ADVISED OF THE POSSIBILITY OF SUCH DAMAGE.

NetApp reserves the right to change any products described herein at any time, and without notice. NetApp assumes no responsibility or liability arising from the use of products described herein, except as expressly agreed to in writing by NetApp. The use or purchase of this product does not convey a license under any patent rights, trademark rights, or any other intellectual property rights of NetApp.

The product described in this manual may be protected by one or more U.S. patents, foreign patents, or pending applications.

RESTRICTED RIGHTS LEGEND: Use, duplication, or disclosure by the government is subject to restrictions as set forth in subparagraph (c)(1)(ii) of the Rights in Technical Data and Computer Software clause at DFARS 252.277-7103 (October 1988) and FAR 52-227-19 (June 1987).

Trademark Information

NETAPP, the NETAPP logo, and the marks listed at http://www.netapp.com/TM are trademarks of NetApp, Inc. Other company and product names may be trademarks of their respective owners.