Install and maintain hardware

Element Software

NetApp
February 12, 2024

This PDF was generated from https://docs.netapp.com/us-en/element-software-123/hardware/task_h410s_h610s_install.html on February 12, 2024. Always check docs.netapp.com for the latest.

Table of Contents

Install and maintain hardware 1
Find more information 1
H410S and H610S hardware information 1
SF-series hardware information 22
Return to Factory Image information 29

Install and maintain hardware

Learn about installing and maintaining H-series and SF-series hardware.

- H410S and H610S hardware information
- SF-series hardware information
- Return to Factory Image information

Find more information

- SolidFire and Element Software Documentation
- Documentation for earlier versions of NetApp SolidFire and Element products

H410S and H610S hardware information

You can find information about installing and maintaining H-series storage nodes.

Here are the links to the installation and maintenance content:

- Install H-series storage nodes
- Replace a H410S node
- Replace a H610S node
- Replace drives
- Replace a power supply unit

Find more information

- SolidFire and Element Software Documentation
- Documentation for earlier versions of NetApp SolidFire and Element products

Install H-series storage nodes

Before you get started with your all-flash storage system, you should install and set up the storage nodes correctly.

See the poster for a visual representation of the instructions.

- Workflow diagrams
- Prepare for installation
- Install the rails
- Install and cable the nodes
- Configure the nodes
- Create a cluster

Workflow diagrams

The workflow diagrams here provide a high-level overview of the installation steps. The steps vary slightly depending on the H-series model.

H410S

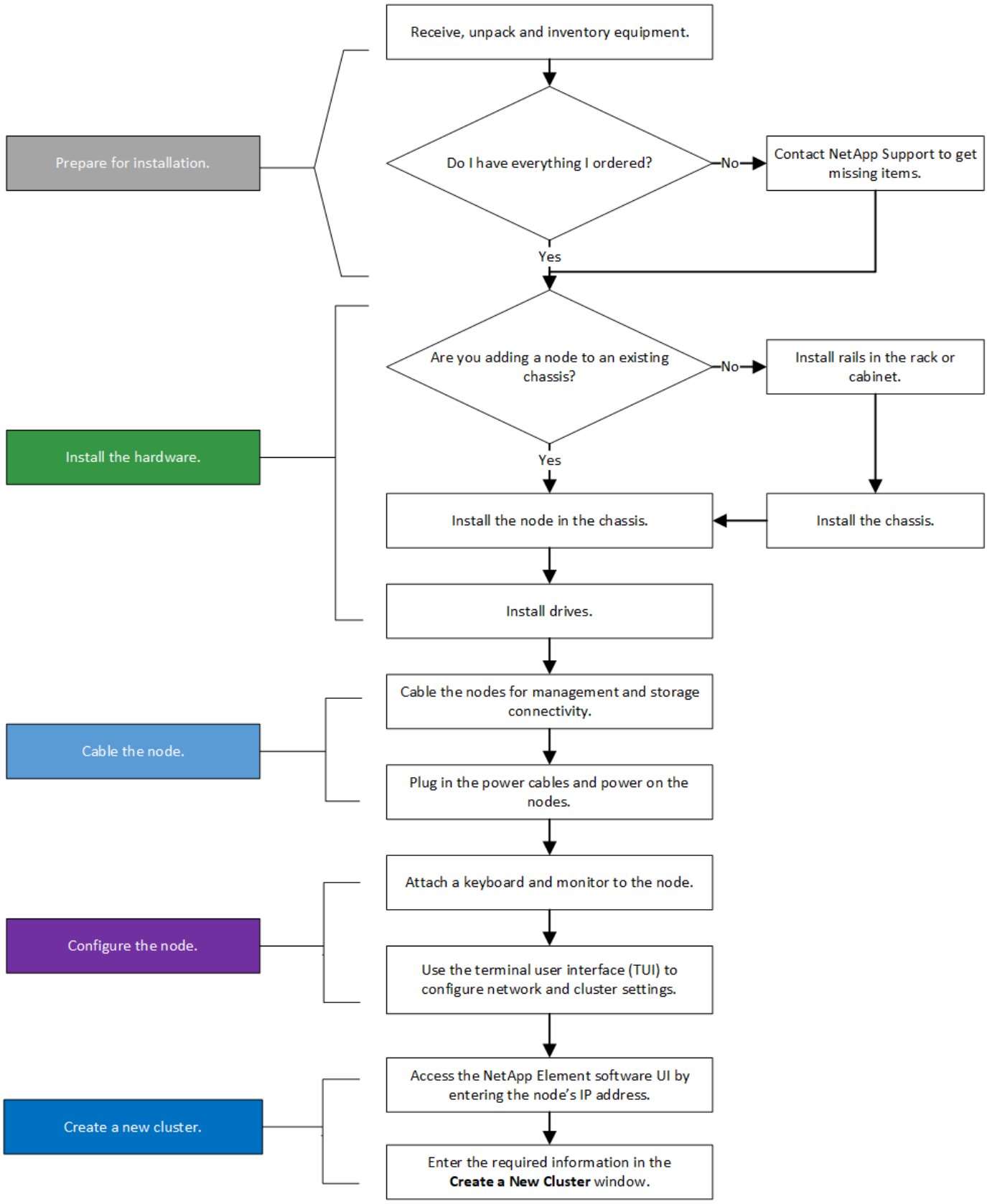

H610S

The terms "node" and "chassis" are used interchangeably in the case of H610S, because node and chassis are not separate components unlike in the case of a 2U, four-node chassis.

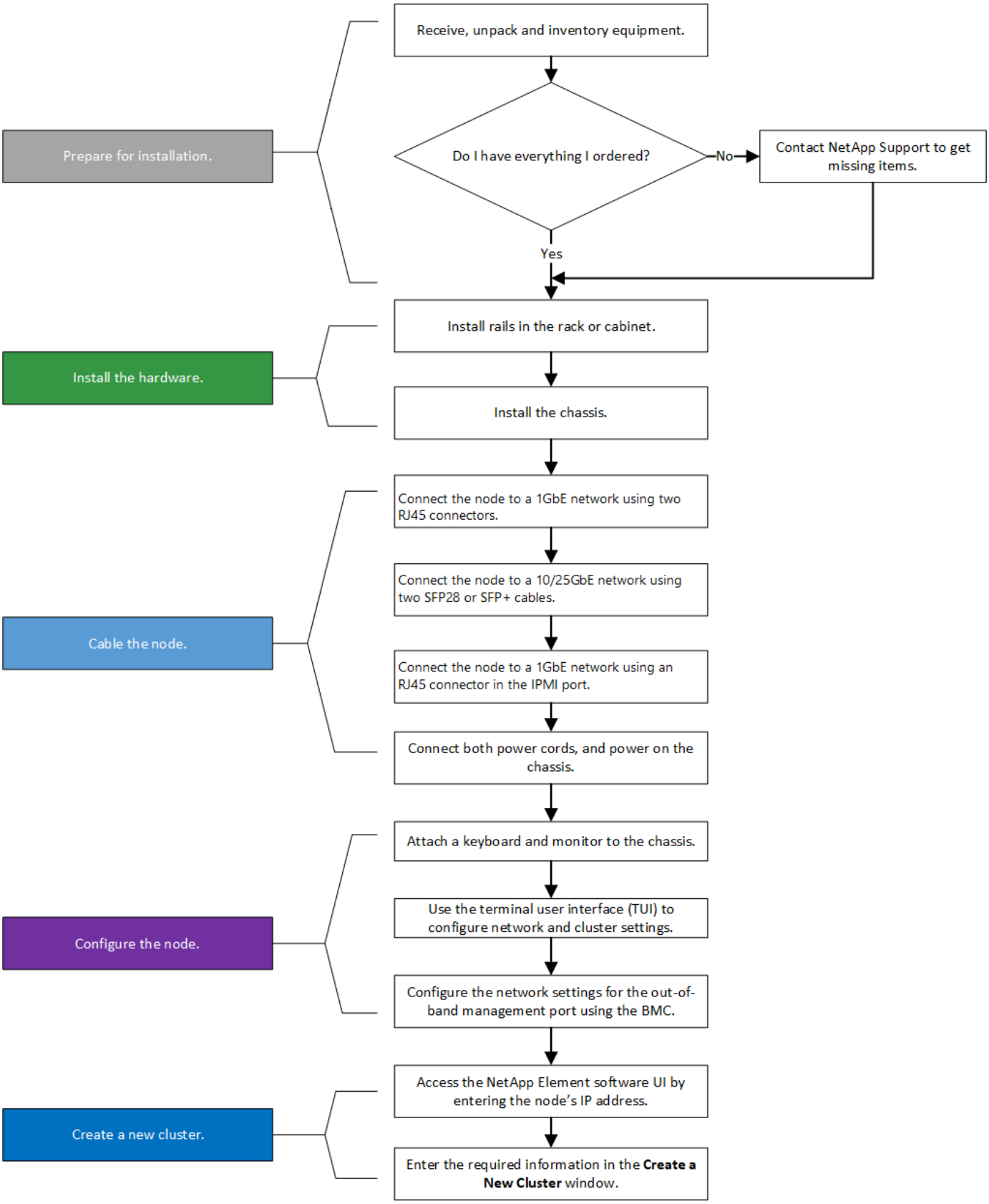

Prepare for installation

In preparation for installation, inventory the hardware that was shipped to you, and contact NetApp Support if any of the items are missing.

Ensure that you have the following items at your installation location:

- Rack space for the system.

Node type	Rack space
H410S nodes	Two rack unit (2U)
H610S nodes	One rack unit (1U)

- SFP28/SFP+ direct-attach cables or transceivers
- CAT5e or higher cables with RJ45 connector
- A keyboard, video, mouse (KVM) switch to configure your system
- USB stick (optional)

> The hardware that is shipped to you depends on what you order. A new 2U, four-node order includes the chassis, bezel, slide rail kit, drives, storage nodes, and power cables (two per chassis). If you order H610S storage nodes, the drives come installed in the chassis.

> While installing the hardware, ensure that you remove all packing material and wrapping from the unit. This will prevent the nodes from overheating and shutting down.

Install the rails

The hardware order that was shipped to you includes a set of slide rails. You will need a screwdriver to complete the rail installation. The installation steps vary slightly for each node model.

> Install hardware from the bottom of the rack up to the top to prevent the equipment from toppling over. If your rack includes stabilizing devices, install them before you install the hardware.

- H410S
- H610S

H410S

H410S nodes are installed in 2U, four-node H-Series chassis, which is shipped with two sets of adapters. If you want to install the chassis in a rack with round holes, use the adapters appropriate for a rack with round holes. The rails for H410S nodes fit a rack between 29 inches and 33.5 inches in depth. When the rail is fully contracted, it is 28 inches long, and the front and rear sections of the rail are held together by only one screw.

> If you install the chassis onto a fully contracted rail, the front and rear sections of the rail might separate.

Steps

1. Align the front of the rail with the holes on the front post of the rack.
2. Push the hooks on the front of the rail into the holes on the front post of the rack and then down, until the spring-loaded pegs snap into the rack holes.
3. Attach the rail to the rack with screws. Here is an illustration of the left rail being attached to the front of the rack:

4. Extend the rear section of the rail to the rear post of the rack.
5. Align the hooks on the rear of the rail with the appropriate holes on the rear post ensuring that the front and the back of the rail are on the same level.
6. Mount the rear of the rail onto the rack, and secure the rail with screws.
7. Perform all the above steps for the other side of the rack.

H610S

Here is an illustration for installing rails for an H610S storage node:

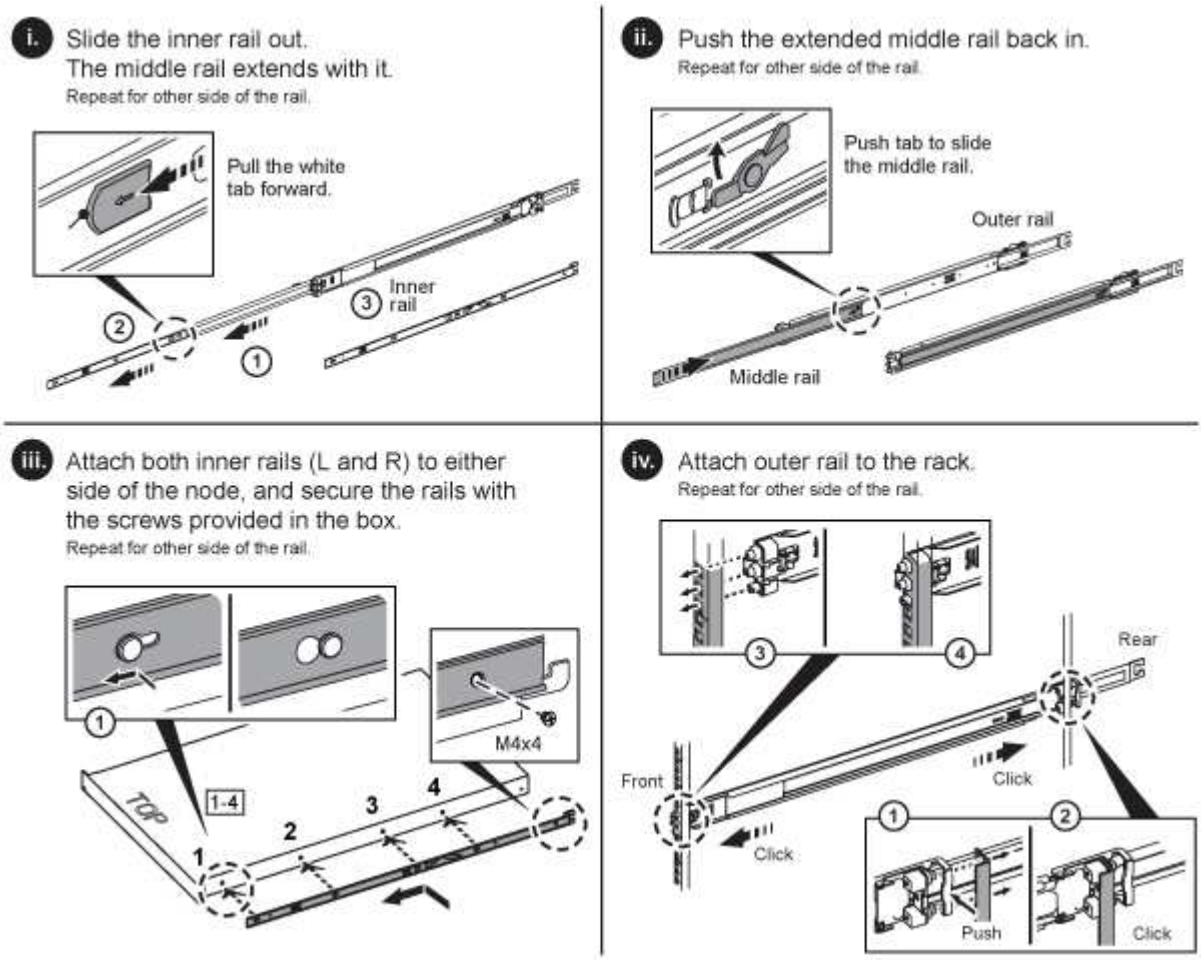

There are left and right rails on the H610S. Position the screw hole towards the bottom so that the H610S thumbscrew can secure the chassis to the rail.

Install and cable the nodes

You install the H410S storage node in a 2U, four-node chassis. For H610S, install the chassis/node directly onto the rails in the rack.

Remove all the packing material and wrapping from the unit. This prevents the nodes from overheating and shutting down.

- H410S
- H610S

H410S

Steps

1. Install the H410S nodes in the chassis. Here is a rear-view example of a chassis with four nodes installed:

> Use caution while lifting the hardware and installing it into the rack. An empty two rack unit (2U), four-node chassis weighs 54.45 lb (24.7 kg) and a node weighs 8.0 lb (3.6 kg).

2. Install the drives.

3. Cable the nodes.

> If the airflow vents at the rear of the chassis are blocked by cables or labels, it can lead to premature component failures due to overheating.

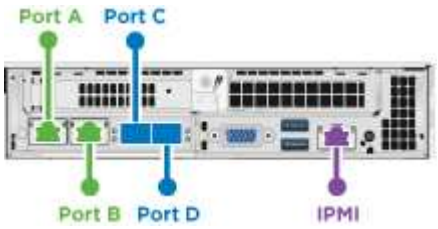

   - Connect two CAT5e or higher cables in ports A and B for management connectivity.
   - Connect two SFP28/SFP+ cables or transceivers in ports C and D for storage connectivity.
   - (Optional, recommended) connect a CAT5e cable in the IPMI port for out-of-band management connectivity.
4. Connect the power cords to the two power supply units per chassis and plug them into 240V PDU or power outlet.
5. Power on the nodes.

> It takes approximately six minutes for the node to boot.

H610S

Steps

1. Install the H610S chassis. Here is an illustration for installing the node/chassis in the rack:

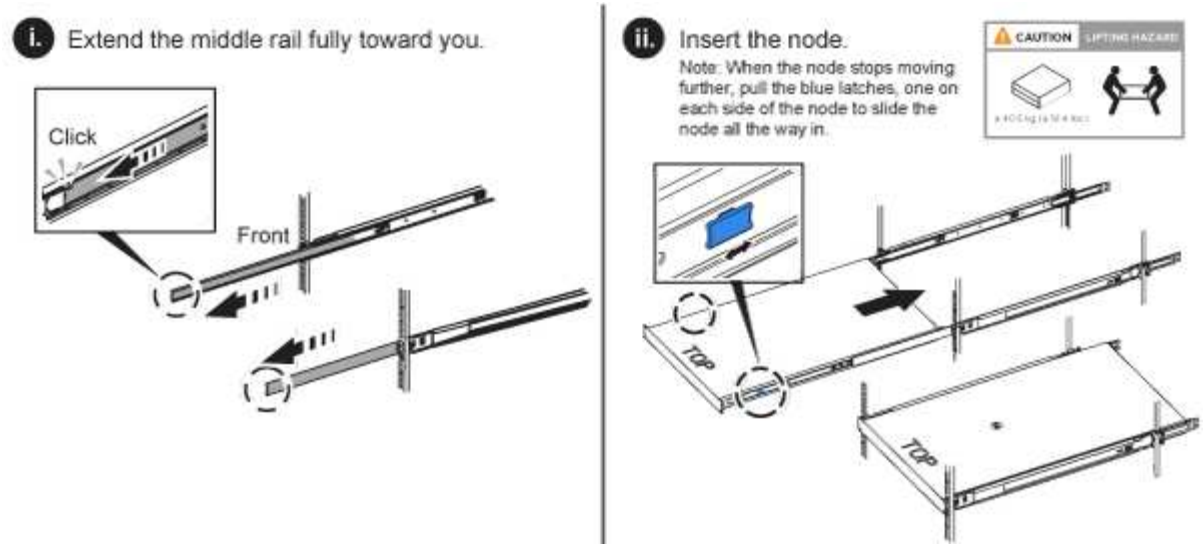

Use caution while lifting the hardware and installing it into the rack. An H610S chassis weighs 40.5 lb (18.4 kg).

2. Cable the nodes.

If the airflow vents at the rear of the chassis are blocked by cables or labels, it can lead to premature component failures due to overheating.

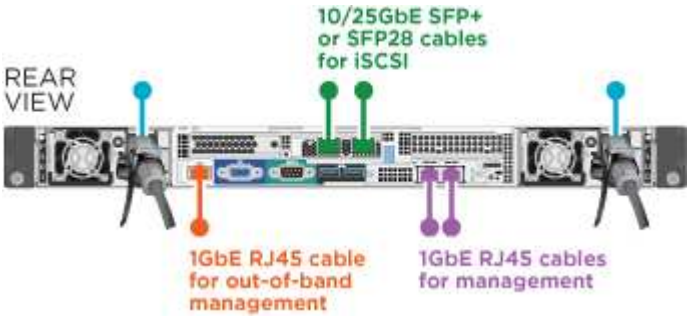

- Connect the node to a 10/25GbE network using two SFP28 or SFP+ cables.
- Connect the node to a 1GbE network using two RJ45 connectors.
- Connect the node to a 1GbE network using an RJ-45 connector in the IPMI port.
- Connect both power cables to the node.

3. Power on the nodes.

It takes approximately five minutes and 30 seconds for the node to boot.

Configure the nodes

After you rack and cable the hardware, you are ready to configure your new storage resource.

Steps

1. Attach a keyboard and monitor to the node.
2. In the terminal user interface (TUI) that is displayed, configure the network and cluster settings for the node by using the on-screen navigation.

> You should get the IP address of the node from the TUI. You need this when you add the node to a cluster. After you save the settings, the node is in a pending state, and can be added to a cluster. See the <insert link to Setup section>.

3. Configure out-of-band management using the Baseboard Management Controller (BMC). These steps apply **only to H610S** nodes.
   a. Use a web browser and navigate to the default BMC IP address: 192.168.0.120
   b. Log in using **root** as the username and **calvin** as the password.
   c. From the node management screen, navigate to **Settings** > **Network Settings**, and configure the network parameters for the out-of-band management port.

> See this KB article (log in required).

Create a cluster

After you add the storage node to your installation and configure the new storage resource, you are ready to create a new storage cluster

Steps

1. From a client on the same network as the newly configured node, access the NetApp Element software UI by entering the node's IP address.
2. Enter the required information in the **Create a New Cluster** window. See the setup overview for more information.

Find more information

- SolidFire and Element Software Documentation
- Documentation for earlier versions of NetApp SolidFire and Element products

Replace a H410S node

You should replace a storage node in the event of CPU failure, Radian card problems, other motherboard issues, or if it does not power on. The instructions apply to H410S storage nodes.

Alarms in the NetApp Element software UI alert you when a storage node fails. You should use the Element UI to get the serial number (service tag) of the failed node. You need this information to locate the failed node in the cluster.

Here is the back of a two rack unit (2U), four-node chassis with four storage nodes:

Here is the front view of a four-node chassis with H410S nodes, showing the bays that correspond to each node:

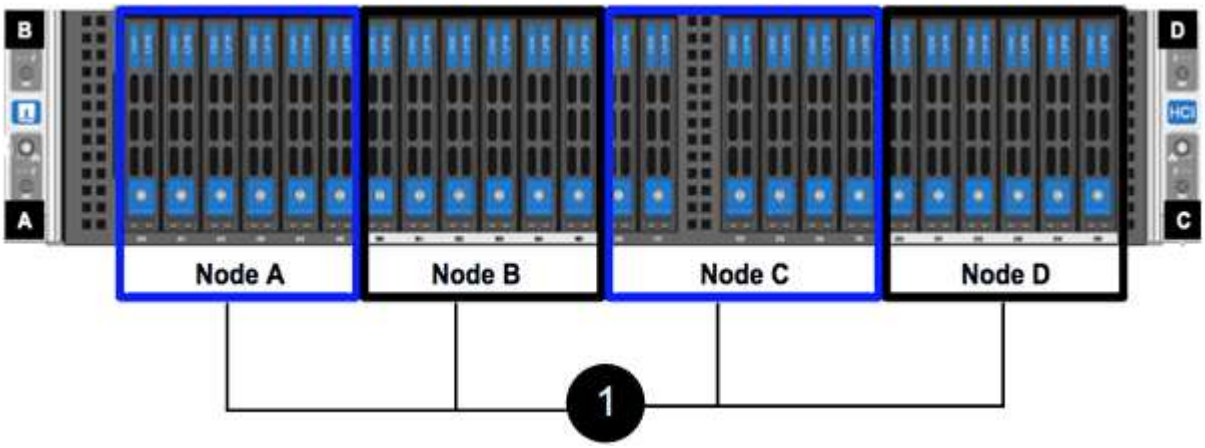

What you'll need

- You have verified that your storage node is faulty and needs to be replaced.
- You have obtained a replacement storage node.
- You have an electrostatic discharge (ESD) wristband, or you have taken other antistatic protection.
- You have labeled each cable that is connected to the storage node.

Here is a high-level overview of the steps:

- Prepare to replace the node
- Replace the node in the chassis
- Add the node to the cluster

Prepare to replace the node

You should remove the faulty storage node correctly from the cluster in the NetApp Element software UI before you install the replacement node. You can do this without causing any service interruption. You should obtain the serial number of the faulty storage node from the Element UI and match it with the serial number on the sticker at the back of the node.

Steps

1. In the Element UI, select **Cluster** > **Drives**.
2. Remove the drives from the node using one of the following methods:

Option	Steps
To remove individual drives	a. Click **Actions** for the drive you want to remove. b. Click **Remove**.
To remove multiple drives	a. Select all the drives you want to remove, and click **Bulk Actions**. b. Click **Remove**.

3. Select **Cluster** > **Nodes**.
4. Note the serial number (service tag) of the faulty node. You should match it with the serial number on the sticker at the back of the node.
5. After you note the serial number, remove the node from the cluster as follows:
   a. Select the **Actions** button for the node you want to remove.
   b. Select **Remove**.

Replace the node in the chassis

After you remove the faulty node from the cluster using the NetApp Element software UI you are ready to physically remove the node from the chassis. You should install the replacement node in the same slot in the chassis from which you removed the failed node.

Steps

1. Wear antistatic protection before proceeding.
2. Unpack the new storage node, and set it on a level surface near the chassis.

   Keep the packaging material for when you return the faulty node to NetApp.

3. Label each cable that is inserted at the back of the storage node that you want to remove.

   After you install the new storage node, you should insert the cables into the original ports.

   Here is an image showing the back of a storage node:

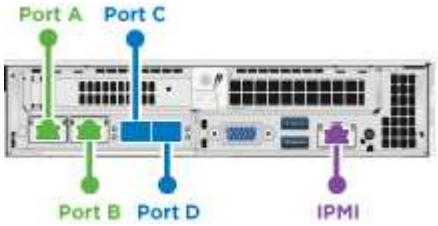

Port	Details
Port A	1/10GbE RJ45 port
Port B	1/10GbE RJ45 port
Port C	10/25GbE SFP+ or SFP28 port

Port	Details
Port D	10/25GbE SFP+ or SFP28 port
IPMI	1/10GbE RJ45 port

4. Disconnect all the cables from the storage node.
5. Pull down the cam handle on the right side of the node, and pull the node out using both the cam handles.

   The cam handle that you pull down has an arrow on it to indicate the direction in which it moves. The other cam handle does not move and is there to help you pull the node out.

Item	Description
1	Cam handle to help you pull the node out.
2	Cam handle that you pull down before pulling the node out.

   Support the node with both your hands when you pull it out of the chassis.

6. Place the node on a level surface.

   You must package the node and return it to NetApp.

7. Install the replacement node in the same slot in the chassis.

   Ensure that you do not use excessive force when sliding the node into the chassis.

8. Move the drives from the node you removed and insert them in the new node.
9. Reconnect the cables to the ports from which you originally disconnected them.

   The labels you had on the cables when you disconnected them will help guide you.

   1. If the airflow vents at the rear of the chassis are blocked by cables or labels, it can lead to premature component failures due to overheating.
   2. Do not force the cables into the ports; you might damage the cables, ports, or both.

   Ensure that the replacement node is cabled in the same way as the other nodes in the chassis.

10. Press the button at the front of the node to power it on.

Add the node to the cluster

When you add a node to the cluster or install new drives in an existing node, the drives automatically register as available. You must add the drives to the cluster by using either the Element UI or API before they can participate in the cluster.

The software version on each node in a cluster should be compatible. When you add a node to a cluster, the cluster installs the cluster version of Element software on the new node as needed.

Steps

1. Select **Cluster** > **Nodes**.
2. Select **Pending** to view the list of pending nodes.
3. Do one of the following:
   - To add individual nodes, select the **Actions** icon for the node you want to add.
   - To add multiple nodes, select the check box of the nodes to add, and then **Bulk Actions**.

   > If the node you are adding has a different version of Element software than the version running on the cluster, the cluster asynchronously updates the node to the version of Element software running on the cluster master. After the node is updated, it automatically adds itself to the cluster. During this asynchronous process, the node will be in a `pendingActive` state.

4. Select **Add**.

   The node appears in the list of active nodes.

5. From the Element UI, select **Cluster** > **Drives**.
6. Select **Available** to view the list of available drives.
7. Do one of the following:
   - To add individual drives, select the **Actions** icon for the drive you want to add, and then select **Add**.
   - To add multiple drives, select the check boxes of the drives to add, select **Bulk Actions**, and then select **Add**.

Find more information

- SolidFire and Element Software Documentation
- Documentation for earlier versions of NetApp SolidFire and Element products

Replace a H610S node

You might need to replace the chassis if the fan, central processing unit (CPU), or dual inline memory module (DIMM) fails, or to fix overheating issues or problems with the boot process. The blinking amber LED in the front of the chassis is an indication of a possible need for chassis replacement. You should contact NetApp Support before you proceed.

> See the KB article for information about installation requirements for H610S nodes. New and spare H610S storage nodes might have additional installation requirements based on the existing Element software version of the storage cluster. Contact NetApp Support for more information.

> The terms "node" and "chassis" are used interchangeably in the case of H610S, which is a one rack unit (1U) chassis.

Best practices for adding and removing drives

You should follow these best practices for adding drives to the cluster:

- Add all the block drives and ensure that block syncing is complete before you add the slice drives.
- For Element software 10.x and later, add all the block drives at once. Ensure that you don't this for more than three nodes at once.
- For Element software 9.x and earlier, add three drives at once allowing them to completely sync before adding the next group of three.
- Remove the slice drive and ensure that slice syncing is complete before removing the block drives.
- Remove all the block drives from a single node at once. Ensure that all block syncing is complete before you move on to the next node.

What you'll need

- You have contacted NetApp Support. If you are ordering a replacement, you should have a case open with NetApp Support.
- You have obtained the replacement node.
- You have an electrostatic discharge (ESD) wristband, or you have taken other antistatic protection.
- If you need to perform the Return to Factory Image (RTFI) process, you have obtained the USB key. NetApp Support can help you decide if you need to perform the RTFI process.
- You have a keyboard and monitor.
- You have removed the failed node correctly from the cluster.
- If a DIMM has failed, you have removed drives before you remove the node from the cluster.

About this task

Alarms in the Element UI alert you when a host fails. You must match the serial number of the failed host from the VMware vSphere Web Client with the serial number on the sticker at the back of the node.

Steps

1. Locate the service tag at the front of the failed chassis.

2. Verify that the serial number on the service tag matches the NetApp Support case number when you ordered the replacement chassis.
3. Plug in the keyboard and monitor to the back of the failed chassis.
4. Verify the serial number of the failed node with NetApp Support.
5. Power down the chassis.
6. Label the drives in the front and cables at the back with their locations, so that you can put them back in the same locations after the replacement. See the following image for the placement of the drives in the chassis:

7. Remove the cables.
8. Remove the chassis by unscrewing the thumbscrews on the mounting ears. You should package and return the failed chassis to NetApp.
9. Install the replacement chassis.
10. Remove the drives carefully from the failed chassis, and insert them in the replacement chassis.

> You should insert the drives in the same slots they were in before you removed them.

11. Remove the power supply units from the failed chassis, and insert them in the replacement chassis.
12. Insert the power supply cables, and the network cables in their original ports.
13. Small form-factor pluggable (SFP) transceivers might be inserted in the 10GbE ports of the replacement node. You should remove them before you cable the 10GbE ports.

> See your switch vendor’s documentation if your switch does not recognize the cables.

14. Power on the chassis by pressing the power button at the front. It takes approximately five minutes and 30 seconds for the node to boot.
15. Perform the configuration steps.

Find more information

- SolidFire and Element Software Documentation
- Documentation for earlier versions of NetApp SolidFire and Element products

Replace drives

If a drive is faulty or if the drive wear level falls below a threshold, you should replace it. Alarms in the Element software UI notify you when a drive has failed or is going to fail. You can hot-swap a failed drive.

About this task

This procedure is for replacing drives in H410S and H610S storage nodes. Removing a drive takes the drive offline. Any data on the drive is removed and migrated to other drives in the cluster. The data migration to other active drives in the system can take a few minutes to an hour depending on capacity utilization and active I/O on the cluster. You should follow these best practices for handling drives while removing and replacing them:

- Keep the drive in the ESD bag until you are ready to install it.
- Open the ESD bag by hand or cut the top off with a pair of scissors.
- Always wear an ESD wrist strap grounded to an unpainted surface on your chassis.
- Always use both hands when removing, installing, or carrying a drive.
- Never force a drive into the chassis.
- Always use approved packaging when shipping drives.
- Do not stack drives on top of each other.

Best practices for adding and removing drives

- Add all the block drives and ensure that block syncing is complete before you add the slice drives.
- For Element software 10.x and later, add all the block drives at once. Ensure that you do not do this for more than three nodes at once.
- For Element software 9.x and earlier, add three drives at once allowing them to completely sync before adding the next group of three.
- Remove the slice drive and ensure that slice syncing is complete before removing the block drives.
- Remove all the block drives from a single node at once. Ensure that all block syncing is complete before you move on to the next node.

Steps

1. Remove the drive from the cluster using the NetApp Element software UI:
   a. From the Element UI, Select **Cluster > Drives**.
   b. Select **Failed** to view the list of failed drives.
   c. Make a note of the slot number of the failed drive. You need this information to locate the failed drive in the chassis.

d. Select **Actions** for the drive you want to remove.

e. Select **Remove**.

> If there is not enough capacity to remove active drives before removing a node, an error message appears when you confirm the drive removal. After you resolve the error, you can now physically remove the drive from the chassis.

2. Replace the drive from the chassis:

   a. Unpack the replacement drive, and place it on a flat, static-free surface near the rack. Save the packing materials for when you return the failed drive to NetApp. Here is the front view of the H610S and H410S storage nodes with the drives:

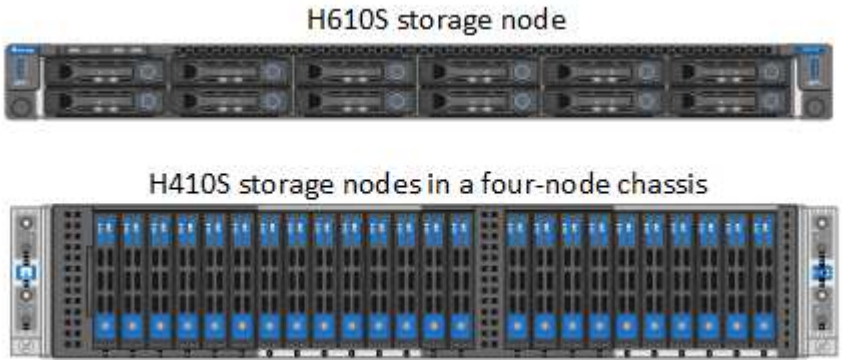

   b. (**H410S only**) Perform the following steps:

      i. Identify the node by matching the serial number (service tag) with the number you noted down from the Element UI. The serial number is on a sticker at the back of each node. After you identify the node, you can use the slot information to identify the slot that the failed drive is in. Drives are arranged alphabetically from A through D and from 0 through 5.

      ii. Remove the bezel.

      iii. Press the release button on the failed drive:

      When you press the release button, the cam handle on the drive springs open partially, and the drive releases from the midplane.

      iv. Open the cam handle, and slide the drive out carefully using both hands.

v. Place the drive on an antistatic, level surface.

vi. Insert the replacement drive into the slot all the way into the chassis using both hands.

vii. Press down the cam handle until it clicks.

viii. Reinstall the bezel.

ix. Notify NetApp Support about the drive replacement. NetApp Support will provide instructions for returning the failed drive.

c. (**H610S only**) Perform the following steps:

i. Match the slot number of the failed drive from the Element UI with the number on the chassis. The LED on the failed drive is lit amber.

ii. Remove the bezel.

iii. Press the release button, and remove the failed drive as shown in the following illustration:

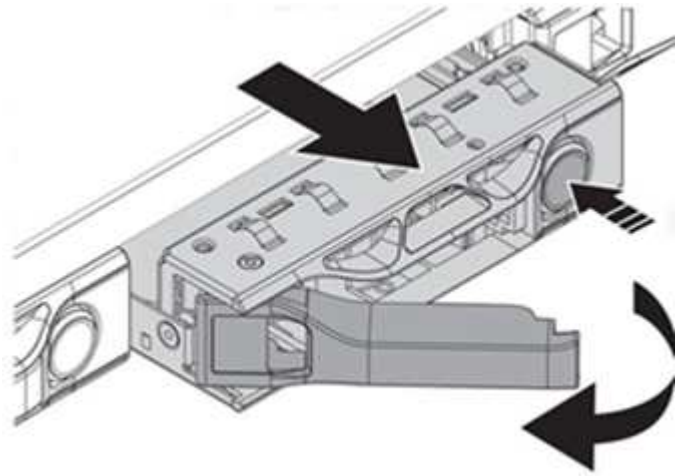

Ensure that the tray handle is fully open before you attempt to slide the drive out of the chassis.

iv. Slide the drive out, and place it on a static-free, level surface.

v. Press the release button on the replacement drive before you insert it into the drive bay. The drive tray handle springs open.

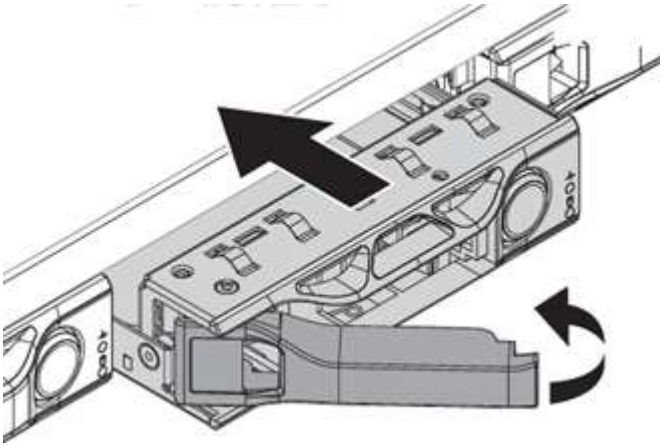

vi. Insert the replacement drive without using excessive force. When the drive is inserted fully, you hear a click.

vii. Close the drive tray handle carefully.

viii. Reinstall the bezel.

ix. Notify NetApp Support about the drive replacement. NetApp Support will provide instructions for returning the failed drive.

3. Add the drive back to the cluster using the Element UI.

> When you install a new drive in an existing node, the drive automatically registers as **Available** in the Element UI. You should add the drive to the cluster before it can participate in the cluster.

a. From the Element UI, Select **Cluster > Drives**.

b. Select **Available** to view the list of available drives.

c. Select the Actions icon for the drive you want to add, and select **Add**.

Find more information

- SolidFire and Element Software Documentation
- Documentation for earlier versions of NetApp SolidFire and Element products

Replace a power supply unit

Each chassis includes two power supply units for power redundancy. If a power supply unit is faulty, you should replace it as soon as possible to ensure that the chassis has a redundant power source.

What you'll need

- You have determined that the power supply unit is faulty.
- You have a replacement power supply unit.
- You have verified that the second power supply unit is operating.
- You have an electrostatic discharge (ESD) wristband, or you have taken other antistatic precautions.

About this task

The replacement procedure applies to the following node models:

- Two rack unit (2U), four-node NetApp HCI chassis
- One rack unit (1U) H610S storage chassis

> In the case of H610S, the terms "node" and "chassis" are used interchangeably because node and chassis are not separate components, unlike in the case of the 2U, four-node chassis.

Alarms in the Element UI provide information about the failed power supply unit, referring to it as PS1 or PS2. In a NetApp HCI 2U, four-node chassis, PS1 refers to the unit on the top row of the chassis and PS2 refers to the unit on the bottom row of the chassis. You can replace the faulty power supply unit while your chassis is powered on and working, as long as the redundant power supply unit is functioning.

If you are replacing both PSUs in a node, the PSUs must have the same part number and wattage. Mismatched PSUs could damage the system.

Steps

1. Locate the faulty power supply unit in the chassis. The LED on the faulty unit displays amber.

   The power supply units are located differently based on the type of chassis.

   See the images below for the locations of the power supply units:

Model	Location of the power supply units
2U, four-node NetApp HCI storage chassis	The nodes in your chassis might look different depending on the type of nodes (storage or compute) you have.
H610S chassis	

2. Identify the correct node using the blue pullout tag or serial number. The blue pull-out tag lists the serial number (S/N) and drive layout. Confirm the node's serial number to be serviced.
   - If you are replacing both power supply units, continue to step 3.
   - If you are replacing only one power supply unit, skip to step 4.
3. Confirm that the node has been powered down or is ready to be powered down for service. Note the following:
   - A node that has been powered down does not display any blue power LEDs on the drives or power button.
   - A node that has not yet been shut down displays blue LEDs on the drives and power button.
   - A node that has been shut down and is ready for service displays a blinking PSU LED that blinks on (green) and off (no color).
   - A node that has not yet been shut down displays solid green LEDs on the power supplies.
4. Unplug the power cord from the power supply unit or both power cords, if replacing both units.
5. Lift the cam handle, and press the blue latch to slide out the power supply unit.

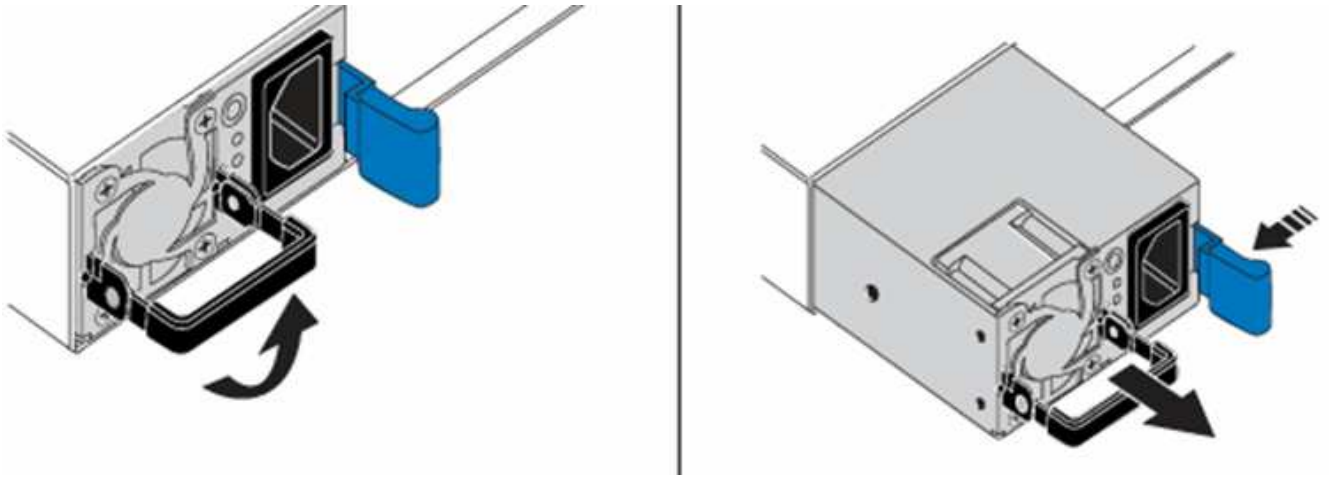

> The illustration is an example. The location(s) of the power supply unit(s) in the chassis and the color of the release button vary depending on the type of chassis you have.

> Ensure that you use both hands to support the weight of the power supply unit.

Repeat steps 3, 4, and 5 if replacing a second power supply unit.

6. Locate the label on the power supply unit that you removed from the chassis. The label contains details of the manufacturer and output wattage.

> Do not replace the power supply unit if the wattage of the power supply from your RMA does not match the wattage of the removed power supply. Contact NetApp Support for next steps.

7. Using both hands, align the edges of the power supply unit with the opening in the chassis, gently push the unit into the chassis using the cam handle until it locks into place, and return the cam handle to the upright position.

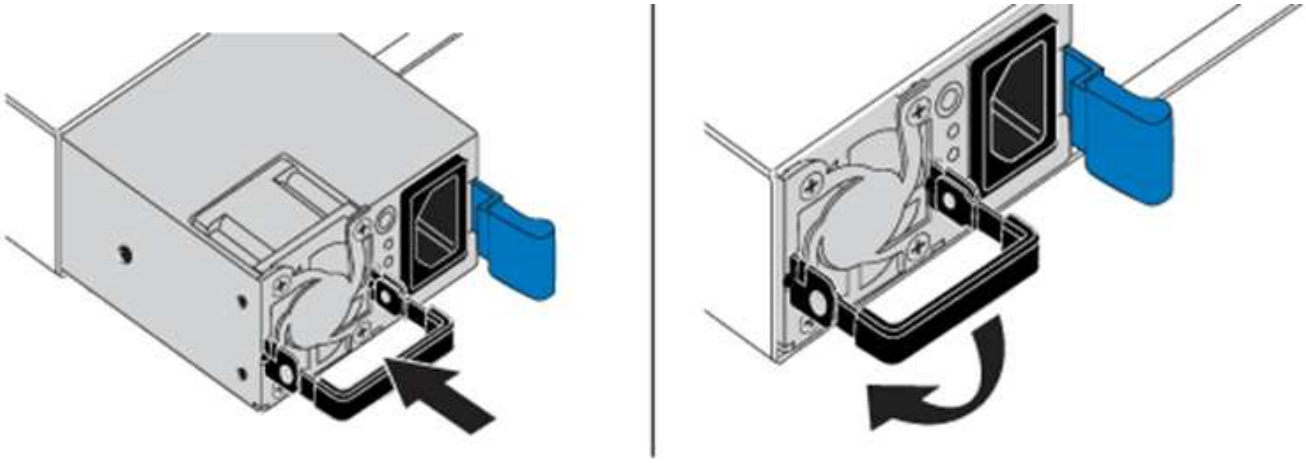

8. Plug in one or both power cords.
9. If you replaced both power supply units, go to the front of the node and press the power button to power on the nodes. After power on, the power button LED illuminates a solid blue color. The blue LEDs for the drives and the identification button will start blinking.
10. Return the faulty unit to NetApp by following the instructions in the box that was shipped to you.

Find more information

- SolidFire and Element Software Documentation
- Documentation for earlier versions of NetApp SolidFire and Element products

SF-series hardware information

You can find information about installing and maintaining SF-series storage nodes.

Here are the links to the installation and maintenance content:

- Install and setup SolidFire C-series nodes
- Install and setup Fibre Channel nodes
- Install and setup SF-series storage nodes
- Replace a chassis
- Replace drives
- Replace a power supply unit

Find more information

- SolidFire and Element Software Documentation
- Documentation for earlier versions of NetApp SolidFire and Element products

Replace a chassis

You might need to replace the chassis if the fan, central processing unit (CPU), or dual inline memory module (DIMM) fails, or to fix overheating issues or problems with the boot process. Cluster faults in the NetApp Element software user interface (UI) and the blinking amber light in the front of the chassis are indications of a possible need for chassis replacement. You should contact NetApp Support before you proceed.

What you'll need

- You have contacted NetApp Support.

  If you are ordering a replacement, you must have a case opened with NetApp Support.

- You have obtained the replacement chassis.
- You have an electrostatic discharge (ESD) wristband, or you have taken other antistatic protection.
- If you need to perform the Return to Factory Image (RTFI) process, you have obtained the USB key.

  NetApp Support will help you decide if RTFI is needed. See this KB article (login required).

- You have a keyboard and monitor.

About this task

The instructions in this document apply if you have a one-rack unit (1U) chassis with any of the following nodes:

- SF2405
- SF3010
- SF4805
- SF6010
- SF9605
- SF9608
- SF9010
- SF19210
- SF38410
- SF-FCN-01
- FC0025

Steps

1. Locate the service tag of the failed chassis and verify that the serial number matches the number on the case you opened with NetApp Support when you ordered the replacement.

   You can locate the service tag from the front of the chassis.

   The following figure is an example of the service tag:

   The above figure is an example. The exact location of the service tag might vary depending on your hardware model.

2. Plug in the keyboard and monitor to the back of the failed chassis.
3. Verify chassis information with NetApp Support.
4. Power down the chassis.
5. Label the drives in the front of the chassis and cables at the back.

   Fibre Channel nodes do not have drives in the front.

6. Remove the power supply units and cables.
7. Remove the drives carefully, and place them on an antistatic, level surface.

   If you have a Fibre Channel node, you can skip this step.

8. Remove the chassis by pressing the latch or unscrewing the thumbscrew, based on your hardware model.

   You should package and return the failed chassis to NetApp.

9. **Optional**: Remove the rails and install the new rails that were shipped with your replacement chassis.

   You can choose to reuse the existing rails. If you are reusing the existing rails, you can skip this step.

10. Slide the replacement chassis on to the rails.
11. For storage nodes, insert the drives from the failed chassis to the replacement chassis.

    You should insert the drives in the same slots as they were in the failed chassis.

12. Install the power supply units.
13. Insert the power supply cables, and the 1GbE and 10GbE cables in their original ports.

    Small form-factor pluggable (SFP) transceivers might be inserted in the 10GbE ports of the replacement chassis. You should remove them before you cable the 10GbE ports.

14. If you have determined that you do not need to perform the RTFI process on the node, boot the node, and wait until the terminal user interface (TUI) appears. Proceed to step 16 and allow the cluster to re-image the node automatically when you add it by using the UI.
15. **Optional**: If NetApp Support recommends re-imaging the node with a USB key, perform the following substeps:
    a. Power on the chassis. It boots with the RTFI key image.
    b. At the first prompt, type **Y** to image the storage node.
    c. At the second prompt, type **N** for hardware health checks.

       If the RTFI script detects a problem with a hardware component, it displays an error in the console. If you see an error, contact NetApp Support. After the RTFI process completes, the node shuts down.

    d. Remove the USB key from the USB slot.
    e. Boot the newly imaged node, and wait for the TUI to appear.
16. Configure the network and cluster information from the TUI.

    You can contact NetApp Support for assistance.

17. Add the new node to the cluster using the cluster TUI.
18. Pack and return the failed chassis.

Find more information

- SolidFire and Element Software Documentation
- Documentation for earlier versions of NetApp SolidFire and Element products

Replace drives for SF-series storage nodes

You can hot-swap a failed solid-state drive with a replacement drive.

What you'll need

- You have a replacement drive.
- You have an electrostatic discharge (ESD) wristband, or you have taken other antistatic precautions.
- You have contacted NetApp Support to verify that the SSD needs to be replaced and for help with the proper resolution procedure.

  You will need the service tag or serial number when you call NetApp Support. Support will work with you to get a replacement drive according to your Service Level Agreement.

About this task

The instructions apply to the following SolidFire storage node models:

- SF2405
- SF3010
- SF4805
- SF6010
- SF9605
- SF9608
- SF9010
- SF19210
- SF38410

The following figure shows the placement of the drives in an SF9605 chassis:

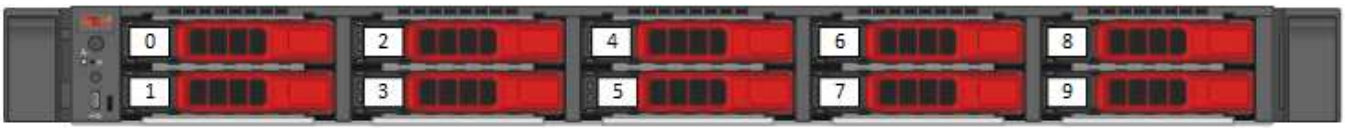

The above figure is an example. SF9608 has a different drive layout that includes only eight drives that are numbered one through eight, from left to right.

Slot 0 holds the metadata drive for the node. If you are replacing the drive in slot 0, you must attach the sticker included in the shipping box on the replacement drive, so that you can identify it separately from the rest. SF3010 is an exception, because metadata is kept on the internal serial advanced technology attachment (SATA) dual inline memory module (DIMM).

Follow these best practices while handling drives:

- Prevent electrostatic discharge (ESD) by keeping the drive in the ESD bag until you are ready to install it.
- Do not insert a metal tool or knife into the ESD bag.
- Open the ESD bag by hand or cut the top off with a pair of scissors.
- Keep the ESD bag and any packing materials in case you must return a drive later.
- Always wear an ESD wrist strap grounded to an unpainted surface on your chassis.
- Always use both hands when removing, installing, or carrying a drive.
- Never force a drive into the chassis.
- Do not stack drives on top of each other.
- Always use approved packaging when shipping drives.

Here is a high-level overview of the steps:

- Remove the drive from the cluster
- Replace the drive from the chassis
- Add the drive to the cluster

Remove the drive from the cluster

The SolidFire system puts a drive in a failed state if the drive's self-diagnostics tells the node it has failed or if communication with the drive stops for five and a half minutes or longer. The system displays a list of the failed drives. You should remove a failed drive from the failed drive list in NetApp Element software.

Steps

1. In the Element UI, select **Cluster** > **Drives**.
2. Select **Failed** to view the list of failed drives.
3. Note the slot number of the failed drive.

   You need this information to locate the failed drive in the chassis.

4. Remove the failed drive using one of the following methods:

Option	Steps
To remove individual drives	a. Select **Actions** for the drive you want to remove. b. Select **Remove**.
To remove multiple drives	a. Select all the drives you want to remove, and the select **Bulk Actions**. b. Select **Remove**.

Replace the drive from the chassis

After you remove a failed drive from the failed drive list in the Element UI, you are ready to physically replace the failed drive from the chassis.

Steps

1. Unpack the replacement drive, and place it on a flat, static-free surface near the rack.

   Save the packing materials for when you return the failed drive to NetApp.

2. Match the slot number of the failed drive from the Element UI with the number on the chassis.

   The following figure is an example to show the numbering of the drive slots:

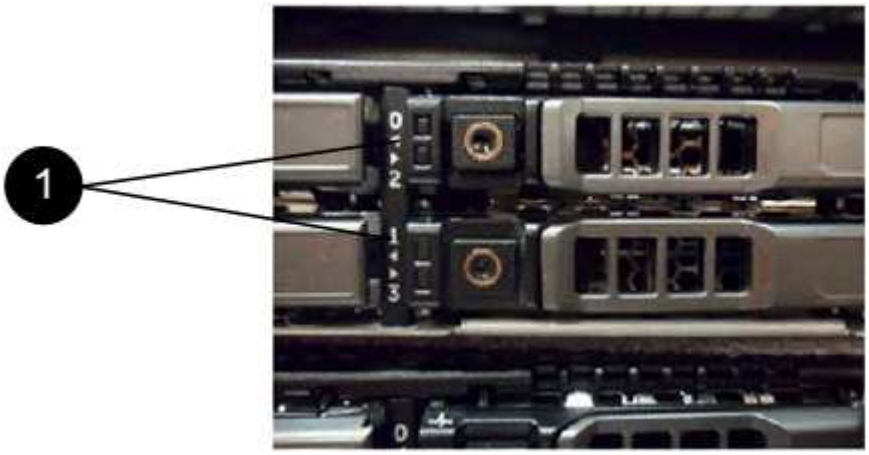

Item	Description
1	Drive slot numbers

3. Press the red circle on the drive you want to remove to release the drive.

   The latch clicks open.

4. Slide the drive out of the chassis, and place it on a static-free, level surface.
5. Press the red circle on the replacement drive before you slide it into the slot.
6. Insert the replacement drive, and press the red circle to close the latch.
7. Notify NetApp Support about the drive replacement.

   NetApp Support will provide instructions for returning the failed drive.

Add the drive to the cluster

After you install a new drive in the chassis, it registers as available. You should add the drive to the cluster using the Element UI before it can participate in the cluster.

Steps

1. In the Element UI, click **Cluster** > **Drives**.
2. Click **Available** to view the list of available drives.

3. Choose one of the following options to add drives:

Option	Steps
To add individual drives	a. Select the **Actions** button for the drive you want to add. b. Select **Add**.
To add multiple drives	a. Select the check boxes of the drives to add, and then select **Bulk Actions**. b. Select **Add**.

Find more information

- SolidFire and Element Software Documentation
- Documentation for earlier versions of NetApp SolidFire and Element products

Replace a power supply unit

Each SolidFire chassis includes two power supply units for power redundancy. If a power supply unit fails, you should replace it as soon as possible to ensure that the chassis has a redundant power source.

What you'll need

- You have determined that the power supply unit needs to be replaced.
- You have a replacement power supply unit.
- You have verified that the second power supply unit is operating.
- You have an electrostatic discharge (ESD) wristband, or you have taken other antistatic precautions.

About this task

The instructions apply if you have a one-rack unit (1U) chassis with any of the following nodes:

- SF2405
- SF3010
- SF4805
- SF6010
- SF9605
- SF9608
- SF9010
- SF19210
- SF38410
- SF-FCN-01
- FC0025

Steps

1. Unplug the power cord from the power supply unit that you are replacing.
2. Press the release button to slide the power supply unit out of the chassis.

   Ensure that you use both hands to support the weight of the power supply unit.

3. Using both hands, align the edges of the replacement power supply unit with the opening in the chassis, and gently push the unit into the chassis.

   Do not use excessive force when sliding the power supply unit into the chassis to prevent damage to the hardware.

4. Plug in the power cord.
5. Return the failed unit to NetApp by following the instructions in the box that was shipped to you.

   You can contact NetApp Support for help with the replacement procedure.

Find more information

- SolidFire and Element Software Documentation
- Documentation for earlier versions of NetApp SolidFire and Element products

Return to Factory Image information

Configure the RTFI

NetApp SolidFire storage systems use the Return To Factory Image (RTFI) process to write a software image to a new node or restore a node to its original factory state. The RTFI process securely erases all existing data and configurations (if any) and installs an unconfigured NetApp Element software image. The RTFI process is available for all SolidFire nodes.

SolidFire systems use one RTFI process for all Element software installations. This includes internal manual installations performed by developers, automatic installations by automated framework tests, field installations by service engineers and customers, and installations performed by various integrators and partners. The same RTFI process is used on all SolidFire nodes, regardless of the chassis or node type in use, to automatically fix any issues.

The intended audience for this guide is integrators who install, configure, use, or troubleshoot storage-related issues.

- Linux: You have some background with Linux systems.
- Networking: You have a familiarity with server networking and networked storage, including IP addresses, netmasks, and gateways.

The RTFI process is data destructive and securely erases all data and configuration details from the node and installs a new operating system. Verify that the node used for the RTFI process is not active as part of a cluster.

Deploy and install the RTFI International Organization for Standardization (ISO) image and perform the RTFI process:

- RTFI deployment and installation options
- Perform the RTFI process
- RTFI options menu

Find more information

- SolidFire and Element Software Documentation
- Documentation for earlier versions of NetApp SolidFire and Element products

RTFI deployment and installation options

The Return To Factory Image (RTFI) process uses a bootable, installable media with a completely self-contained, minimalistic Linux OS to deploy Element software on a node. You can download the RTFI ISO image specific to your Element software version from the NetApp support site.

After you download the RTFI ISO image, you can deploy it according to one of the following commonly used methods:

- **Physical USB key**: You can write a bootable Element software ISO to a USB key. For instructions, see the Knowledge Base article How to create an RTFI key to re-image a SolidFire storage node. Insert the USB key with the ISO into the node and boot from the USB key.
- **Virtual media using the baseboard management controller (BMC) management port**: You can use the BMC to dynamically attach to the ISO located on your client system. The ISO is made available to the host OS as a virtual drive (CD or DVD). For more information, see the Knowledge Base article How to RTFI a node via BMC.
- **Network boot using a Preboot Execution Environment (PXE), Trivial File Transfer Protocol (TFTP), or FTP**: Instead of manually unpacking an ISO image, you can use `autofs` to automatically extract an image when the RTFI process requests it. This deployment mechanism requires more initial setup but allows for correct automation and scalability of installation.

Find more information

- SolidFire and Element Software Documentation
- Documentation for earlier versions of NetApp SolidFire and Element products

The RTFI process

You can begin the Return to Factory Image (RTFI) process by interacting with the node through text console prompts that appear before the system boots.

> The RTFI process is data destructive and securely erases all data and configuration details from the node and installs a new operating system. Verify that the node used for the RTFI process is not active as part of a cluster.

The RTFI process performs the following high-level operations:

1. Starts the installation after user confirmation and validates the image.
2. Unlocks all drives on a node.
3. Validates and flashes firmware.
4. Checks hardware.
5. Tests hardware.
6. Secure erases all selected drives.
7. Partitions the root drive and creates file systems.
8. Mounts and unpacks the image.
9. Configures the host name, networking (Dynamic Host Configuration Protocol), default cluster configuration, and GRUB bootloader.
10. Stops all services, collects logs, and reboots.

To configure your node after the RTFI process successfully completes, see the documentation for your Element software version. After a node successfully completes the RTFI process, it transitions to the *available* (unconfigured) state by default.

Perform the RTFI process

Use the following procedure to restore the Element software on your SolidFire node.

For information on creating a USB key or using the BMC to perform the RTFI process, see RTFI deployment and installation options.

Before you begin

Verify that you meet the following requirements:

- You have access to a console for the SolidFire node.
- The node on which you are performing the RTFI process is powered up and connected to a network.
- The node on which you are performing the RTFI process is not part of an active cluster.
- You have access to bootable installation media that contains the image of the relevant Element software version for your configuration.

Contact NetApp Support if you have any concerns before performing the RTFI process.

Steps

1. Connect a monitor and keyboard to the back of the node, or connect to the BMC IP UI, and bring up the **iKVM/HTML5** console from the **Remote Control** tab in the UI.
2. Insert a USB key with an appropriate image in one of the two USB slots in the back of the node.
3. Power on or power reset the node. During the boot-up, select Boot Device by selecting **F11**:

   You must select **F11** multiple times in quick succession because the Boot Device screen goes by quickly.

4. In the Boot Device selection menu, highlight the USB option.

   The options that appear depend on the USB brand that you are using.

   If there are no USB devices listed, go into the BIOS, verify that the USB is listed in the boot order, reboot, and try again.

   If that does not resolve the issue, go into the BIOS, browse to the **Save and Exit** tab, select **Restore to Optimized Defaults**, accept and save the settings, and reboot.

5. A list of the images that are on the highlighted USB device appear. Select the desired version and select enter to start the RTFI process.

   The RTFI image Element software name and version number appear.

6. At the initial prompt, you are notified that the process will remove all data from the node and that data is not recoverable after the process begins. Enter **Yes** to begin.

   All data and configuration details are permanently erased from the node after the process is initiated. If you elect not to proceed, you are directed to the RTFI options menu.

   If you want to watch the console during the RTFI process, you can press the **ALT+F8** keys to toggle to the verbose mode console. Press **ALT+F7** to return to the primary GUI.

7. Enter **No** when prompted to perform extensive hardware tests unless you have a reason to suspect hardware failure or are directed to perform the tests by NetApp Support.

   A message indicates that the RTFI process has finished and the system powers off.

8. If necessary, remove all bootable installation media after the node powers off.

   The node is now ready to be powered on and configured. See the Element software set up storage documentation to configure the storage node.

If you encountered an error message during the RTFI process, see RTFI options menu.

Find more information

- SolidFire and Element Software Documentation
- Documentation for earlier versions of NetApp SolidFire and Element products

RTFI options menu

The following options menu appears if the RTFI process is unsuccessful or if you elect not to proceed at the initial RTFI process prompt.

Contact NetApp Support before using any of the following command options.

Option	Description
Reboot	Exits the RTFI process and reboots the node in its current state. No cleanup is performed.
PowerOff	Gracefully powers off the node in its current state. No cleanup is performed.
Exit	Exits the RTFI process and opens a command prompt.
UploadLogs	Collects all logs on the system and uploads a single consolidated log archive to a specified URL.

Upload logs

Collect all logs on the system and upload them to a specified URL according to the following procedure.

Steps

1. At the RTFI options menu prompt, enter **UploadLogs**.
2. Enter the remote directory information:
   a. Type a URL that includes the protocol. For example: `ftp://`,`scp://`,`http://`,`orhttps://`.
   b. (Optional) Add an embedded user name and password. For example:

`scp://user:password@URLaddress.com`.

> For a full range of syntax options, see the cURL user manual.

The log file is uploaded and saved to the specified directory as a `.tbz2` archive.

Use the support tunnel

If you require technical support for your NetApp HCI system or SolidFire all-flash storage system, NetApp Support can connect remotely with your system. To start a session and gain remote access, NetApp Support can open a reverse Secure Shell (SSH) connection to your environment.

You can open a TCP port for an SSH reverse tunnel connection with NetApp Support. This connection enables NetApp Support to log in to your management node.

Before you begin

- For management services 2.18 and later, the capability for remote access is disabled on the management node by default. To enable remote access functionality, see Manage SSH functionality on the management node.
- If your management node is behind a proxy server, the following TCP ports are required in the sshd.config file:

TCP port	Description	Connection direction
443	API calls/HTTPS for reverse port forwarding via open support tunnel to the web UI	Management node to storage nodes
22	SSH login access	Management node to storage nodes or from storage nodes to management node

Steps

- Log in to your management node and open a terminal session.
- At a prompt, enter the following:

```
rst -r sfsupport.solidfire.com -u element -p <port_number>
```

- To close the remote support tunnel, enter the following:

```
rst --killall
```

- (Optional) Disable remote access functionality again.

> SSH remains enabled on the management node if you do not disable it. SSH enabled configuration persists on the management node through updates and upgrades until it is manually disabled.

Find more information

- SolidFire and Element Software Documentation
- Documentation for earlier versions of NetApp SolidFire and Element products

Copyright information

Copyright © 2024 NetApp, Inc. All Rights Reserved. Printed in the U.S. No part of this document covered by copyright may be reproduced in any form or by any means—graphic, electronic, or mechanical, including photocopying, recording, taping, or storage in an electronic retrieval system—without prior written permission of the copyright owner.

Software derived from copyrighted NetApp material is subject to the following license and disclaimer:

THIS SOFTWARE IS PROVIDED BY NETAPP “AS IS” AND WITHOUT ANY EXPRESS OR IMPLIED WARRANTIES, INCLUDING, BUT NOT LIMITED TO, THE IMPLIED WARRANTIES OF MERCHANTABILITY AND FITNESS FOR A PARTICULAR PURPOSE, WHICH ARE HEREBY DISCLAIMED. IN NO EVENT SHALL NETAPP BE LIABLE FOR ANY DIRECT, INDIRECT, INCIDENTAL, SPECIAL, EXEMPLARY, OR CONSEQUENTIAL DAMAGES (INCLUDING, BUT NOT LIMITED TO, PROCUREMENT OF SUBSTITUTE GOODS OR SERVICES; LOSS OF USE, DATA, OR PROFITS; OR BUSINESS INTERRUPTION) HOWEVER CAUSED AND ON ANY THEORY OF LIABILITY, WHETHER IN CONTRACT, STRICT LIABILITY, OR TORT (INCLUDING NEGLIGENCE OR OTHERWISE) ARISING IN ANY WAY OUT OF THE USE OF THIS SOFTWARE, EVEN IF ADVISED OF THE POSSIBILITY OF SUCH DAMAGE.

NetApp reserves the right to change any products described herein at any time, and without notice. NetApp assumes no responsibility or liability arising from the use of products described herein, except as expressly agreed to in writing by NetApp. The use or purchase of this product does not convey a license under any patent rights, trademark rights, or any other intellectual property rights of NetApp.

The product described in this manual may be protected by one or more U.S. patents, foreign patents, or pending applications.

LIMITED RIGHTS LEGEND: Use, duplication, or disclosure by the government is subject to restrictions as set forth in subparagraph (b)(3) of the Rights in Technical Data -Noncommercial Items at DFARS 252.227-7013 (FEB 2014) and FAR 52.227-19 (DEC 2007).

Data contained herein pertains to a commercial product and/or commercial service (as defined in FAR 2.101) and is proprietary to NetApp, Inc. All NetApp technical data and computer software provided under this Agreement is commercial in nature and developed solely at private expense. The U.S. Government has a non-exclusive, non-transferrable, nonsublicensable, worldwide, limited irrevocable license to use the Data only in connection with and in support of the U.S. Government contract under which the Data was delivered. Except as provided herein, the Data may not be used, disclosed, reproduced, modified, performed, or displayed without the prior written approval of NetApp, Inc. United States Government license rights for the Department of Defense are limited to those rights identified in DFARS clause 252.227-7015(b) (FEB 2014).

Trademark information

NETAPP, the NETAPP logo, and the marks listed at http://www.netapp.com/TM are trademarks of NetApp, Inc. Other company and product names may be trademarks of their respective owners.