Design Considerations

HCI

NetApp
September 04, 2020

This PDF was generated from https://docs.netapp.com/us-en/hci-solutions/anthos_reference_design_considerations.html on May 31, 2021. Always check docs.netapp.com for the latest.

Table of Contents

Design Considerations . . . 1
- Port Identification . . . 1
- Network Design . . . 1
- VLAN Requirements . . . 2
- Network Infrastructure Support Resources . . . 3
- Best Practices . . . 3

Design Considerations

This section describes the design considerations necessary for the successful deployment of the NetApp HCI Anthos solution.

Port Identification

NetApp HCI consists of NetApp H-Series nodes dedicated to either compute or storage. Both node configurations are available with two 1GbE ports (ports A and B) and two 10/25 GbE ports (ports C and D) on board. The compute nodes have additional 10/25GbE ports (ports E and F) available in the first mezzanine slot. Each node also has an additional out-of-band management port that supports Intelligent Platform Management Interface (IPMI) functionality. The following figure identifies each of these ports on the rear of an H410C node.

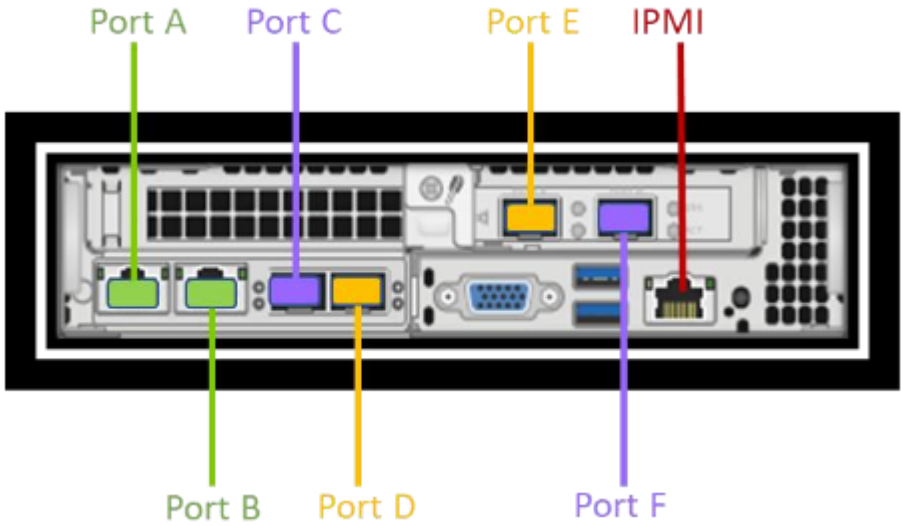

Figure 1. NetApp HCI network ports (compute node).

Network Design

The NetApp HCI with Anthos solution uses two data switches to provide primary data connectivity at 25Gbps. It also uses two additional management switches that provide connectivity at 1Gbps for in-band management for the storage nodes and out-of-band management for IPMI functionality.

Cabling Storage Nodes

The management ports A and B must be active on each storage node to run NDE, configure the NetApp HCI cluster, and provide management accessibility to Element after the solution is deployed. The two 25Gbps ports (C and D) should be connected, one to each data switch, to provide physical fault tolerance. The switch ports should be configured for multi-chassis link aggregation (MLAG) and the data ports on the node should be configured for LACP with jumbo-frames support enabled. The IPMI ports on each node can be used to remotely manage the node after it is installed in a data center. With IPMI, the node can be accessed with a web-browser-based console to run the initial installation, run diagnostics, and reboot or shut down the node if necessary.

Cabling Compute Nodes

The 25Gbps ports on the compute nodes are cabled with one onboard port © cabled to one data switch, and an additional port from the PCI slot (E) cabled to the second switch to provide physical fault tolerance. These ports should be configured to support jumbo frames. Connectivity for the node is managed by the vDS after VMware vSphere is deployed in the environment. The IPMI ports can also be used to remotely manage the node after it is installed in a data center. With IPMI, the node can be accessed via a web-browser-based console to run diagnostics and to be rebooted or shut down if necessary.

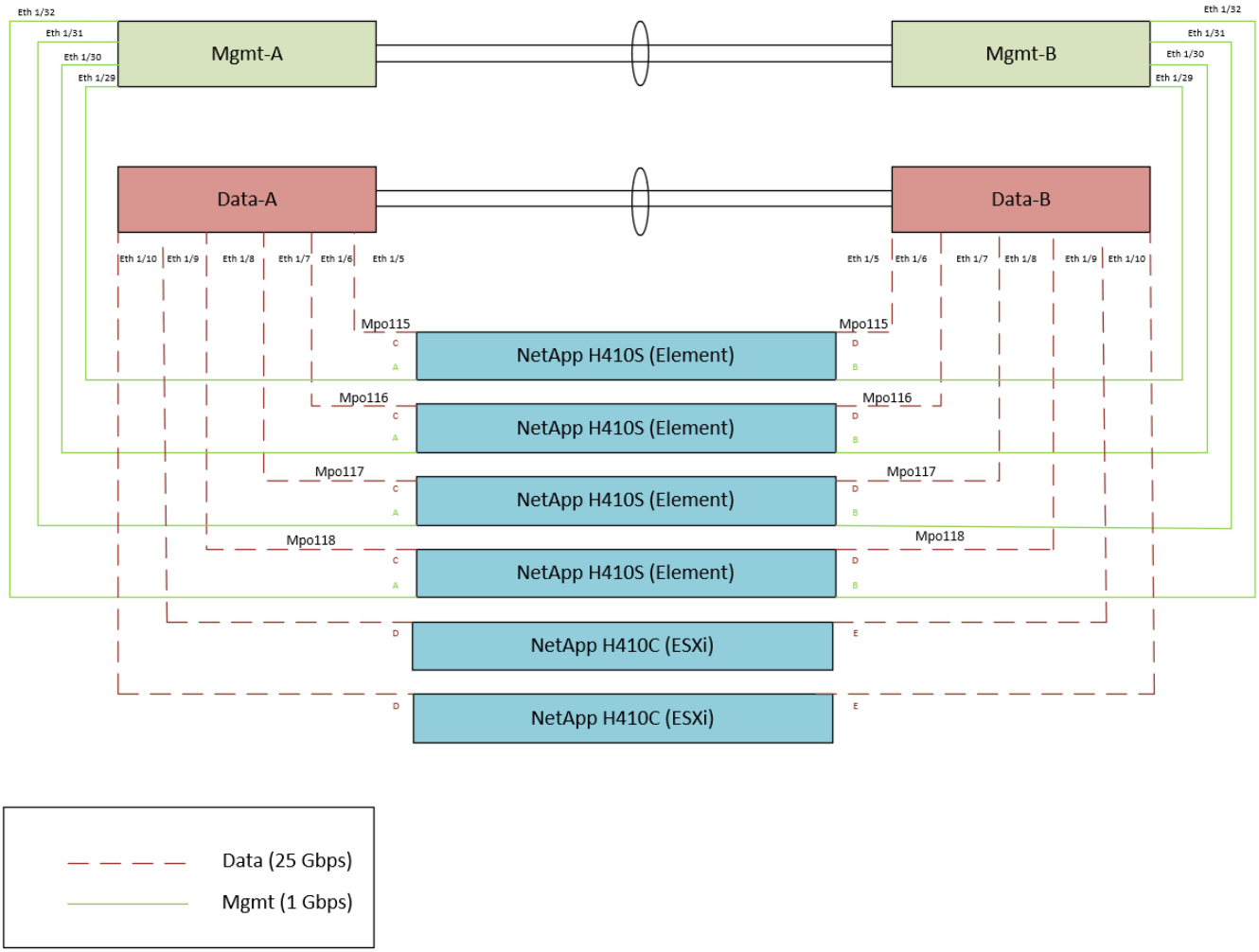

Figure 2. Network cabling reference diagram.

VLAN Requirements

The solution is designed to logically separate network traffic for different purposes by using Virtual Local Area Networks (VLANs). NetApp HCI requires a minimum of three network segments. However, this configuration can be scaled to meet customer demands or to provide further isolation for specific network services. The following table lists the VLANs that are required to implement the solution, as well as the specific VLAN IDs that are used later in the validated architecture deployment.

VLANs	Purpose	VLAN Used
Out-of-band management	Management for HCI nodes	16

VLANs	Purpose	VLAN Used
In-band management	Management for HCI nodes and infrastructure virtual guests	3480
Storage Network	Storage network for NetApp Element	3481
vMotion network	Network for VMware vMotion	3482
VM network	Network for virtual guests	1172

Network Infrastructure Support Resources

The following infrastructure should be in place prior to the deployment of the Anthos on NetApp HCI solution:

- A DHCP server providing addresses for both the in-band management network and the VM network. The DHCP pool must be large enough to support at least 10 VMs for an initial deployment and should be scaled as necessary.
- At least one DNS server providing full host-name resolution that is accessible from the in-band management network and the VM network.
- At least one NTP server that is accessible from the in-band management network and the VM network.
- Outbound internet connectivity for both the in-band management network and the VM network.

Best Practices

Install a Second F5 Big-IP Virtual Edition Appliance

In a production environment, it is a best practice to avoid single points of failure in your environment. For this validation, a single F5 BIG-IP Virtual Edition Load Balancer appliance was used to validate connectivity to the control plane and the ingress VIP addresses for the Anthos on VMware clusters. While this works fine for a simple validation, loss of communication with the control plane VIP for a cluster can make a cluster inaccessible or unable to be managed from the admin workstation or the Google Cloud console. F5 BIG-IP Virtual Edition supports application-based HA to make sure disruptions do not happen. Although this issue is mentioned briefly, setup procedures for this functionality are not described in detail in this document. However, NetApp recommends investigating this feature further before deploying the NetApp HCI for Anthos solution into production.

Enable VMware vSphere DRS and Configure Anti-Affinity Rules

VMware vSphere provides a feature that makes sure that no single node in the cluster runs low on physical resources available to virtual guests. The Distributed Resource Scheduler (DRS) can be configured on vSphere clusters consisting of at least three ESXi nodes. The NetApp HCI minimum configuration described in this deployment guide consists of two compute nodes and is unable to make use of this feature. As a result of this limitation, we were also forced to disable anti-affinity rules for the Anthos on VMware clusters that we deployed.

Anti-affinity rules ensure all masters or all workers for a specific user cluster run on different nodes, so that a single node failure cannot disable an entire user cluster or the pods that it is hosting. As the NetApp HCI system is both easily and rapidly scalable, and considering the minimum deployment described in this validation has two open chassis slots for immediate expansion of HCI 410C nodes, NetApp suggests adding additional compute nodes into the empty chassis slots prior to deploying the solution into production, and enabling DRS with Anti-Affinity rules.

Leverage SnapMirror to Copy Data Remotely for Disaster Recovery

NetApp Element storage systems can use NetApp SnapMirror technology to replicate storage volumes to systems running the NetApp ONTAP system, including AFF, FAS, and Cloud Volumes ONTAP. You can set up regularly scheduled SnapMirror operations to back up the VMware datastores and restore from a remote site in the event of a disaster. It is also possible to use SnapMirror to back up or migrate the persistent volumes provisioned by Trident and reattach them to Kubernetes clusters deployed in other environments and in the cloud.

Next: Hardware and Software Requirements

Copyright Information

Copyright © 2021 NetApp, Inc. All rights reserved. Printed in the U.S. No part of this document covered by copyright may be reproduced in any form or by any means-graphic, electronic, or mechanical, including photocopying, recording, taping, or storage in an electronic retrieval system-without prior written permission of the copyright owner.

Software derived from copyrighted NetApp material is subject to the following license and disclaimer:

THIS SOFTWARE IS PROVIDED BY NETAPP “AS IS” AND WITHOUT ANY EXPRESS OR IMPLIED WARRANTIES, INCLUDING, BUT NOT LIMITED TO, THE IMPLIED WARRANTIES OF MERCHANTABILITY AND FITNESS FOR A PARTICULAR PURPOSE, WHICH ARE HEREBY DISCLAIMED. IN NO EVENT SHALL NETAPP BE LIABLE FOR ANY DIRECT, INDIRECT, INCIDENTAL, SPECIAL, EXEMPLARY, OR CONSEQUENTIAL DAMAGES (INCLUDING, BUT NOT LIMITED TO, PROCUREMENT OF SUBSTITUTE GOODS OR SERVICES; LOSS OF USE, DATA, OR PROFITS; OR BUSINESS INTERRUPTION) HOWEVER CAUSED AND ON ANY THEORY OF LIABILITY, WHETHER IN CONTRACT, STRICT LIABILITY, OR TORT (INCLUDING NEGLIGENCE OR OTHERWISE) ARISING IN ANY WAY OUT OF THE USE OF THIS SOFTWARE, EVEN IF ADVISED OF THE POSSIBILITY OF SUCH DAMAGE.

NetApp reserves the right to change any products described herein at any time, and without notice. NetApp assumes no responsibility or liability arising from the use of products described herein, except as expressly agreed to in writing by NetApp. The use or purchase of this product does not convey a license under any patent rights, trademark rights, or any other intellectual property rights of NetApp.

The product described in this manual may be protected by one or more U.S. patents, foreign patents, or pending applications.

RESTRICTED RIGHTS LEGEND: Use, duplication, or disclosure by the government is subject to restrictions as set forth in subparagraph (c)(1)(ii) of the Rights in Technical Data and Computer Software clause at DFARS 252.277-7103 (October 1988) and FAR 52-227-19 (June 1987).

Trademark Information

NETAPP, the NETAPP logo, and the marks listed at http://www.netapp.com/TM are trademarks of NetApp, Inc. Other company and product names may be trademarks of their respective owners.