Replace DC power supply units in H615C and H610S nodes

HCI

Aksel Davis, Dave Bagwell, amitha
May 26, 2021

This PDF was generated from https://docs.netapp.com/us-en/hci/docs/task_hci_dcpsurepl.html on July 16, 2021. Always check docs.netapp.com for the latest.

Table of Contents

Replace DC power supply units in H615C and H610S nodes 1
Find more information 3

Replace DC power supply units in H615C and H610S nodes

H615C and H610S nodes support two –48 V to –60 V DC power supply units. These units are available as optional add-ons when you order H615C or H610S nodes. You can use the these instructions to remove the AC power supply units in the chassis and replace them with DC power supply units, or to replace a faulty DC power supply unit with a new DC power supply unit.

What you'll need

- If you are replacing a faulty DC power supply unit, you have procured a replacement DC power supply unit.
- If you are swapping out the AC power supply units in your chassis with DC units, you have taken into consideration the downtime for the procedure.
- You have an electrostatic discharge (ESD) wristband, or you have taken other antistatic precautions.
- You have ensured that the power supply requirements are met:
  - Supply voltage: –(48-60) V DC
  - Current consumption: 37A (maximum)
  - Breaker requirements: 40A breaker
- You have ensured that the materials in your environment adhere to the RoHS specifications.
- You have ensured that the cable requirements are met:
  - One UL 10 AWG, 2 m maximum (stranded) black cable [–(48-60) V DC]
  - One UL 10 AWG, 2 m maximum (stranded) red cable [V DC return]
  - One UL 10 AWG, 2 m maximum green/yellow cable, green with a yellow stripe, stranded wire (safety ground)

About this task

The procedure applies to the following node models:

- One rack unit (1U) H615C compute chassis
- 1U H610S storage chassis

> In the case of H615C and H610S, the terms "node" and "chassis" are used interchangeably because node and chassis are not separate components, unlike in the case of the 2U, four-node chassis.

> You cannot mix AC and DC power supply units in your installation.

Steps

1. Turn off the power supply units and unplug the power cords. If you are replacing a faulty DC power supply unit, turn off the power source and remove all the cables inserted into the blue connector.
2. Lift the cam handle, and press the blue latch to slide out the power supply unit.

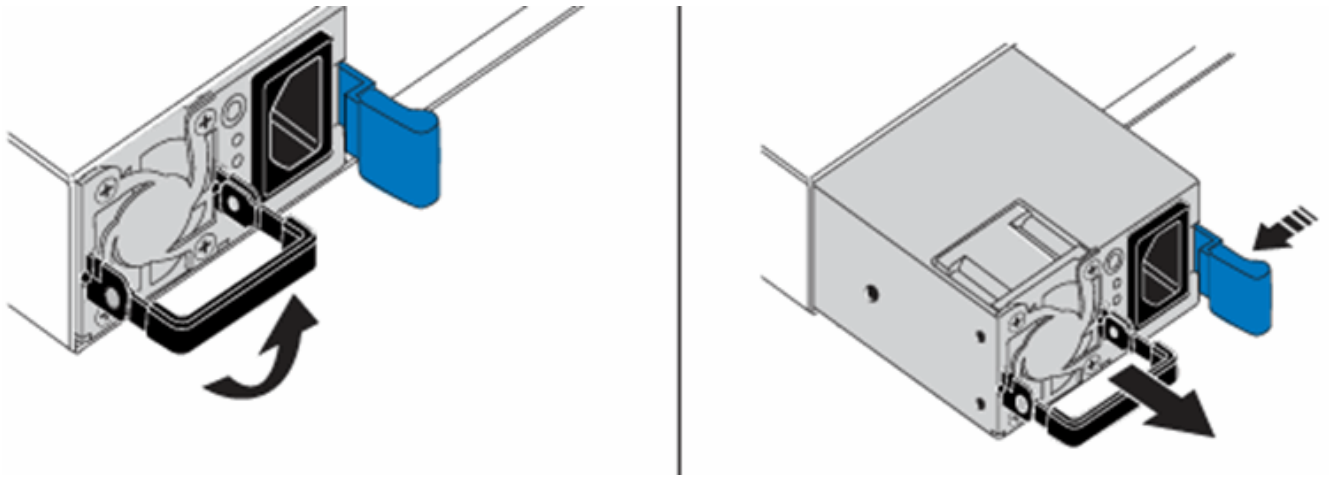

The illustration is an example. The location of the power supply unit in the chassis and the color of the release button vary depending on the type of chassis you have.

Ensure that you use both hands to support the weight of the power supply unit.

3. Using both hands, align the edges of the power supply unit with the opening in the chassis, gently push the unit into the chassis using the cam handle until it locks into place, and return the cam handle to the upright position.

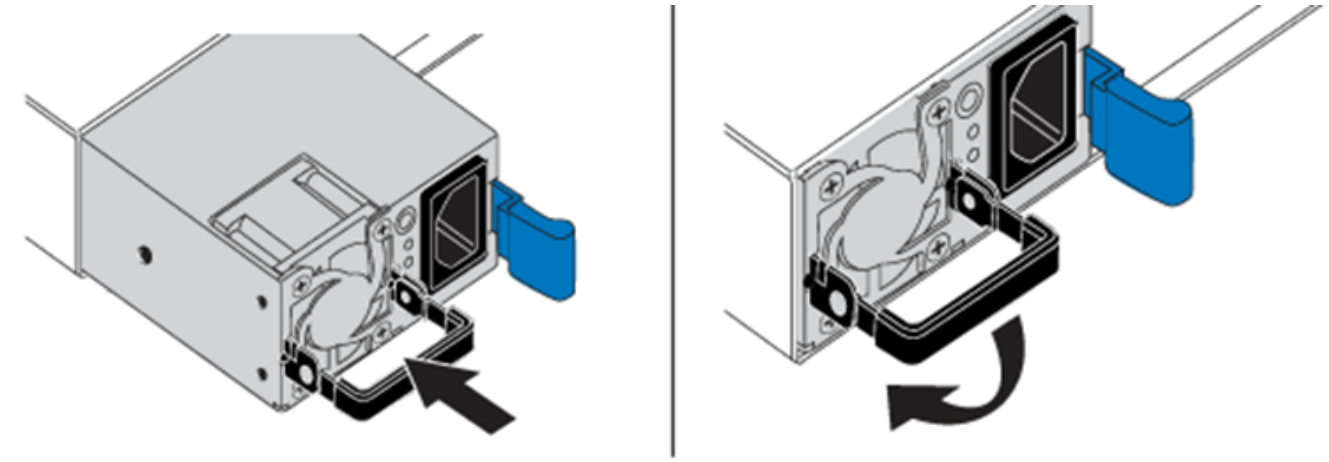

4. Cable the DC power supply units. Ensure that the power source is off while cabling the DC power supply unit and the power source.
   a. Insert the black, red, and green/yellow cables to the blue connectors.
   b. Insert the blue connector to the DC power supply units and the power source.

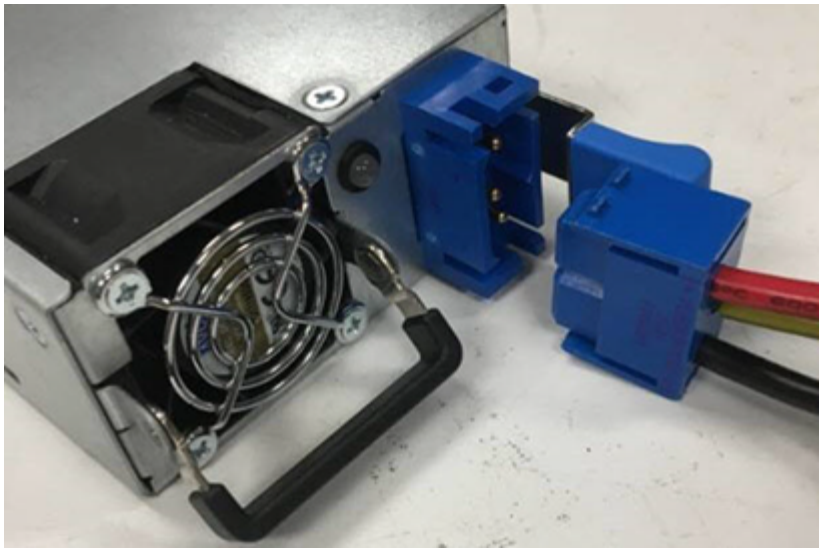

5. Power on the DC power supply units.

> The power supply LEDs are lit when the DC power supply unit comes online. Green LED lights indicate that the power supply units are working correctly.

6. Return the faulty unit to NetApp by following the instructions in the box that was shipped to you.

Find more information

- NetApp HCI Resources page
- SolidFire and Element Software Documentation Center

Copyright Information

Copyright © 2021 NetApp, Inc. All rights reserved. Printed in the U.S. No part of this document covered by copyright may be reproduced in any form or by any means-graphic, electronic, or mechanical, including photocopying, recording, taping, or storage in an electronic retrieval system-without prior written permission of the copyright owner.

Software derived from copyrighted NetApp material is subject to the following license and disclaimer:

THIS SOFTWARE IS PROVIDED BY NETAPP “AS IS” AND WITHOUT ANY EXPRESS OR IMPLIED WARRANTIES, INCLUDING, BUT NOT LIMITED TO, THE IMPLIED WARRANTIES OF MERCHANTABILITY AND FITNESS FOR A PARTICULAR PURPOSE, WHICH ARE HEREBY DISCLAIMED. IN NO EVENT SHALL NETAPP BE LIABLE FOR ANY DIRECT, INDIRECT, INCIDENTAL, SPECIAL, EXEMPLARY, OR CONSEQUENTIAL DAMAGES (INCLUDING, BUT NOT LIMITED TO, PROCUREMENT OF SUBSTITUTE GOODS OR SERVICES; LOSS OF USE, DATA, OR PROFITS; OR BUSINESS INTERRUPTION) HOWEVER CAUSED AND ON ANY THEORY OF LIABILITY, WHETHER IN CONTRACT, STRICT LIABILITY, OR TORT (INCLUDING NEGLIGENCE OR OTHERWISE) ARISING IN ANY WAY OUT OF THE USE OF THIS SOFTWARE, EVEN IF ADVISED OF THE POSSIBILITY OF SUCH DAMAGE.

NetApp reserves the right to change any products described herein at any time, and without notice. NetApp assumes no responsibility or liability arising from the use of products described herein, except as expressly agreed to in writing by NetApp. The use or purchase of this product does not convey a license under any patent rights, trademark rights, or any other intellectual property rights of NetApp.

The product described in this manual may be protected by one or more U.S. patents, foreign patents, or pending applications.

RESTRICTED RIGHTS LEGEND: Use, duplication, or disclosure by the government is subject to restrictions as set forth in subparagraph (c)(1)(ii) of the Rights in Technical Data and Computer Software clause at DFARS 252.277-7103 (October 1988) and FAR 52-227-19 (June 1987).

Trademark Information

NETAPP, the NETAPP logo, and the marks listed at http://www.netapp.com/TM are trademarks of NetApp, Inc. Other company and product names may be trademarks of their respective owners.