Replace drives for storage nodes

HCI

amitha, Aksel Davis, Dave Bagwell
May 26, 2021

This PDF was generated from https://docs.netapp.com/us-en/hci/docs/task_hci_driverepl.html on July 16, 2021. Always check docs.netapp.com for the latest.

Table of Contents

Replace drives for storage nodes 1
Find more information 6

Replace drives for storage nodes

If a drive is faulty or if the drive wear level falls below a threshold, you should replace it. Alarms in the Element software UI and VMware vSphere Web Client notify you when a drive has failed or is going to fail. You can hot-swap a failed drive.

About this task

This procedure is for replacing drives in H410S and H610S storage nodes. Removing a drive takes the drive offline. Any data on the drive is removed and migrated to other drives in the cluster. The data migration to other active drives in the system can take a few minutes to an hour depending on capacity utilization and active I/O on the cluster.

Best practices for handling drives

You should follow these best practices for handling drives:

- Keep the drive in the ESD bag until you are ready to install it.
- Open the ESD bag by hand or cut the top off with a pair of scissors.
- Always wear an ESD wrist strap grounded to an unpainted surface on your chassis.
- Always use both hands when removing, installing, or carrying a drive.
- Never force a drive into the chassis.
- Always use approved packaging when shipping drives.
- Do not stack drives on top of each other.

Best practices for adding and removing drives

You should follow these best practices for adding drives to the cluster and removing drives from the cluster:

- Add all the block drives and ensure that block syncing is complete before you add the slice drives.
- For Element software 10.x and later, add all the block drives at once. Ensure that you don’t this for more than three nodes at once.
- For Element software 9.x and earlier, add three drives at once allowing them to completely sync before adding the next group of three.
- Remove the slice drive and ensure that slice syncing is complete before removing the block drives.
- Remove all the block drives from a single node at once. Ensure that all block syncing is complete before you move on to the next node.

Steps

1. Remove the drive from the cluster using either the NetApp Element software UI or the NetApp Element Management extension point in Element plug-in for vCenter server.

Option	Steps
Using the Element UI	1. From the Element UI, Select **Cluster > Drives**. 2. Click **Failed** to view the list of failed drives. 3. Make a note of the slot number of the failed drive. You need this information to locate the failed drive in the chassis. 4. Click **Actions** for the drive you want to remove. 5. Click **Remove**. You can now physically remove the drive from the chassis.
Using the Element plug-in for vCenter server UI	1. From the NetApp Element Management extension point of the vSphere Web Client, select **NetApp Element Management > Cluster**. 2. If two or more clusters are added, ensure that the cluster you intend to use for the task is selected in the navigation bar. 3. Select **All** from the drop-down list to view the complete list of drives. 4. Select the check box for each drive you want to remove. 5. Select **Remove Drives**. 6. Confirm the action. If there is not enough capacity to remove active drives before removing a node, an error message appears when you confirm the drive removal. After you resolve the error, you can now physically remove the drive from the chassis.

2. Replace the drive from the chassis:
   a. Unpack the replacement drive, and place it on a flat, static-free surface near the rack.
      Save the packing materials for when you return the failed drive to NetApp.
      Here is the front view of the H610S and H410S storage nodes with the drives:

H610S storage node

H410S storage nodes in a four-node chassis

b. Perform the steps based on the node model:

Node model	Steps
H410S	1. Identify the node by matching the serial number (service tag) with the number you noted down from the Element UI. The serial number is on a sticker at the back of each node. After you identify the node, you can use the slot information to identify the slot that the failed drive is in. Drives are arranged alphabetically from A through D and from 0 through 5. 2. Remove the bezel. 3. Press the release button on the failed drive: 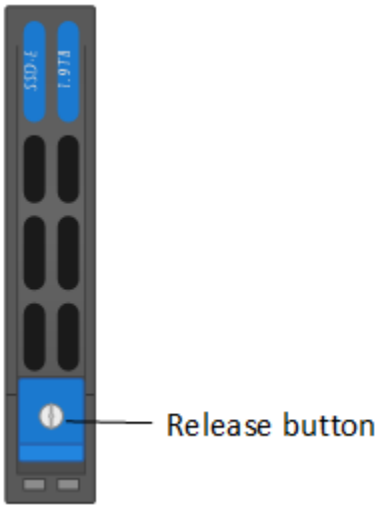 When you press the release button, the cam handle on the drive springs open partially, and the drive releases from the midplane. 4. Open the cam handle, and slide the drive out carefully using both hands. 5. Place the drive on an antistatic, level surface. 6. Insert the replacement drive into the slot all the way into the chassis using both hands. 7. Press down the cam handle until it clicks. 8. Reinstall the bezel. 9. Notify NetApp Support about the drive replacement. NetApp Support will provide instructions for returning the failed drive.

Node model	Steps
H610S	1. Match the slot number of the failed drive from the Element UI with the number on the chassis. The LED on the failed drive is lit amber. 2. Remove the bezel. 3. Press the release button, and remove the failed drive as shown in the following illustration: 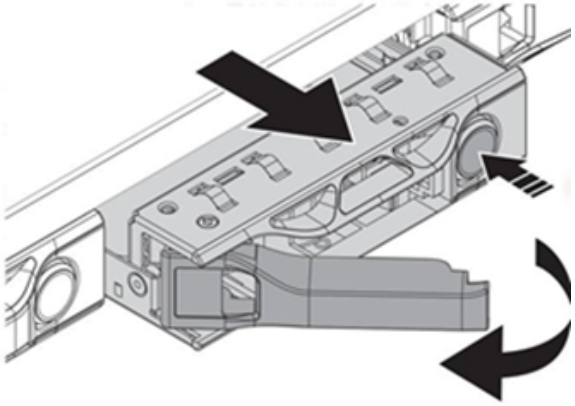 Ensure that the tray handle is fully open before you attempt to slide the drive out of the chassis. 4. Slide the drive out, and place it on a static-free, level surface. 5. Press the release button on the replacement drive before you insert it into the drive bay. The drive tray handle springs open. 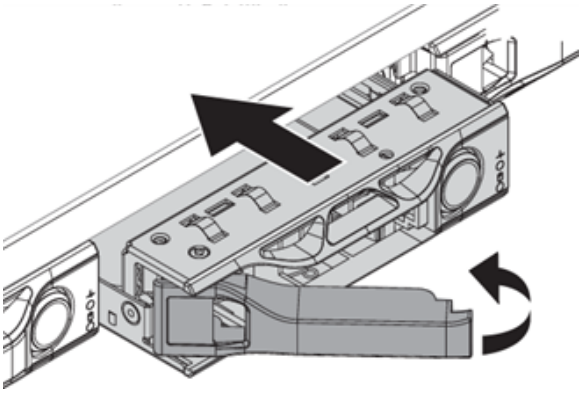 6. Insert the replacement drive without using excessive force. When the drive is inserted fully, you hear a click. 7. Close the drive tray handle carefully. Reinstall the bezel. Notify NetApp Support about the drive replacement.

3. Add the drive back to the cluster using either the Element UI or the NetApp Element Management extension point in Element plug-in for vCenter server.

   NetApp Support will provide instructions for returning the failed drive.

   When you install a new drive in an existing node, the drive automatically registers as **Available** in the Element UI. You should add the drive to the cluster before it can participate in the cluster.

Option	Steps
Using the Element UI	1. From the Element UI, select **Cluster > Drives**. 2. Select **Available** to view the list of available drives. 3. Select the Actions icon for the drive you want to add, and select **Add**.
Using the Element plug-in for vCenter server UI	1. From the NetApp Element Management extension point of the vSphere Web Client, select **NetApp Element Management > Cluster > Drives**. 2. From the Available drop-down list, select the drive, and select **Add**. 3. Confirm the action.

Find more information

- NetApp HCI Resources page
- SolidFire and Element Software Documentation Center

Copyright Information

Copyright © 2021 NetApp, Inc. All rights reserved. Printed in the U.S. No part of this document covered by copyright may be reproduced in any form or by any means-graphic, electronic, or mechanical, including photocopying, recording, taping, or storage in an electronic retrieval system-without prior written permission of the copyright owner.

Software derived from copyrighted NetApp material is subject to the following license and disclaimer:

THIS SOFTWARE IS PROVIDED BY NETAPP “AS IS” AND WITHOUT ANY EXPRESS OR IMPLIED WARRANTIES, INCLUDING, BUT NOT LIMITED TO, THE IMPLIED WARRANTIES OF MERCHANTABILITY AND FITNESS FOR A PARTICULAR PURPOSE, WHICH ARE HEREBY DISCLAIMED. IN NO EVENT SHALL NETAPP BE LIABLE FOR ANY DIRECT, INDIRECT, INCIDENTAL, SPECIAL, EXEMPLARY, OR CONSEQUENTIAL DAMAGES (INCLUDING, BUT NOT LIMITED TO, PROCUREMENT OF SUBSTITUTE GOODS OR SERVICES; LOSS OF USE, DATA, OR PROFITS; OR BUSINESS INTERRUPTION) HOWEVER CAUSED AND ON ANY THEORY OF LIABILITY, WHETHER IN CONTRACT, STRICT LIABILITY, OR TORT (INCLUDING NEGLIGENCE OR OTHERWISE) ARISING IN ANY WAY OUT OF THE USE OF THIS SOFTWARE, EVEN IF ADVISED OF THE POSSIBILITY OF SUCH DAMAGE.

NetApp reserves the right to change any products described herein at any time, and without notice. NetApp assumes no responsibility or liability arising from the use of products described herein, except as expressly agreed to in writing by NetApp. The use or purchase of this product does not convey a license under any patent rights, trademark rights, or any other intellectual property rights of NetApp.

The product described in this manual may be protected by one or more U.S. patents, foreign patents, or pending applications.

RESTRICTED RIGHTS LEGEND: Use, duplication, or disclosure by the government is subject to restrictions as set forth in subparagraph (c)(1)(ii) of the Rights in Technical Data and Computer Software clause at DFARS 252.277-7103 (October 1988) and FAR 52-227-19 (June 1987).

Trademark Information

NETAPP, the NETAPP logo, and the marks listed at http://www.netapp.com/TM are trademarks of NetApp, Inc. Other company and product names may be trademarks of their respective owners.