# Replace power supply units

HCI

amitha, Aksel Davis, Dave Bagwell
May 26, 2021

This PDF was generated from https://docs.netapp.com/us-en/hci/docs/task_hci_psurepl.html on July 16, 2021. Always check docs.netapp.com for the latest.

# Table of Contents

Replace power supply units . . . . . 1
Find more information . . . . . 3

# Replace power supply units

Each chassis includes two power supply units for power redundancy. If a power supply unit is faulty, you should replace it as soon as possible to ensure that the chassis has a redundant power source.

**What you'll need**

- You have determined that the power supply unit is faulty.
- You have a replacement power supply unit.
- You have verified that the second power supply unit is operating.
- You have an electrostatic discharge (ESD) wristband, or you have taken other antistatic precautions.

**About this task**

The replacement procedure applies to the following node models:

- Two rack unit (2U), four-node NetApp HCI chassis
- 2U H610C compute chassis
- One rack unit (1U) H615C compute chassis
- 1U H610S storage chassis

> In the case of H610C, H615C, and H610S, the terms "node" and "chassis" are used interchangeably because node and chassis are not separate components, unlike in the case of the 2U, four-node chassis.

Alarms in the VMware vSphere Web Client provide information about the failed power supply unit, referring to it as PS1 or PS2. In a NetApp HCI 2U, four-node chassis, PS1 refers to the unit on the top row of the chassis and PS2 refers to the unit on the bottom row of the chassis. You can replace the faulty power supply unit while your chassis is powered on and working, as long as the redundant power supply unit is functioning.

**Steps**

1. Locate the faulty power supply unit in the chassis. The LED on the faulty unit displays amber.

   > The power supply units are located differently based on the type of chassis.

   See the images below for the locations of the power supply units:

| Model | Location of the power supply units |
|---|---|
| 2U, four-node NetApp HCI storage chassis | The nodes in your chassis might look different depending on the type of nodes (storage or compute) you have. |

| Model | Location of the power supply units |
| --- | --- |
| H610C chassis | 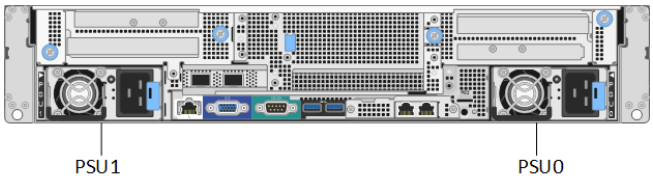 |
| H615C chassis | |
| H610S chassis | |

2. Unplug the power cord from the power supply unit.
3. Lift the cam handle, and press the blue latch to slide out the power supply unit.

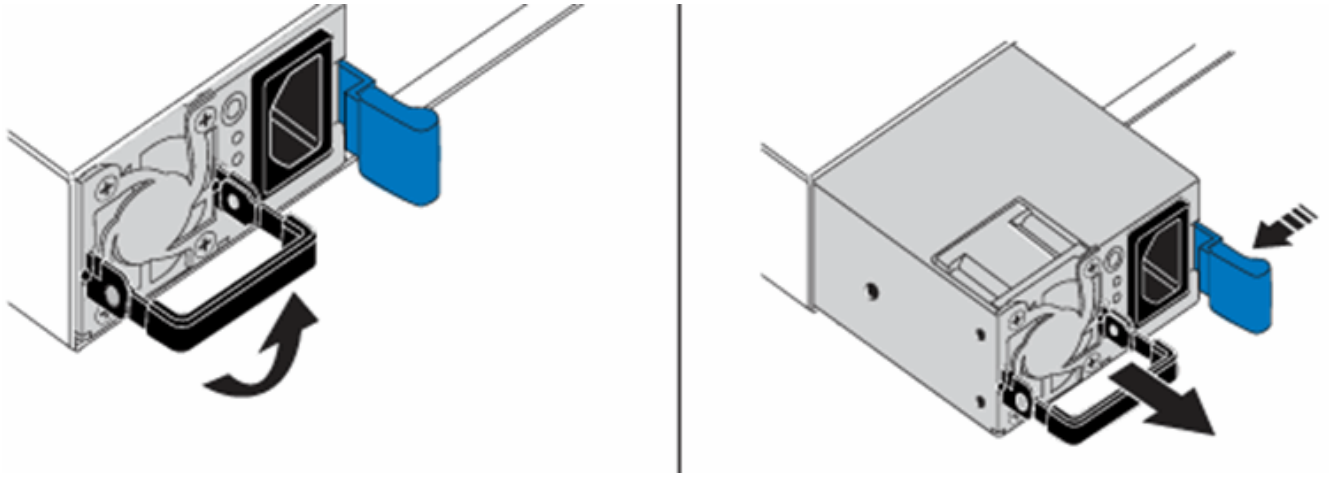

The illustration is an example. The location of the power supply unit in the chassis and the color of the release button vary depending on the type of chassis you have.

Ensure that you use both hands to support the weight of the power supply unit.

4. Using both hands, align the edges of the power supply unit with the opening in the chassis, gently push the unit into the chassis using the cam handle until it locks into place, and return the cam handle to the upright position.

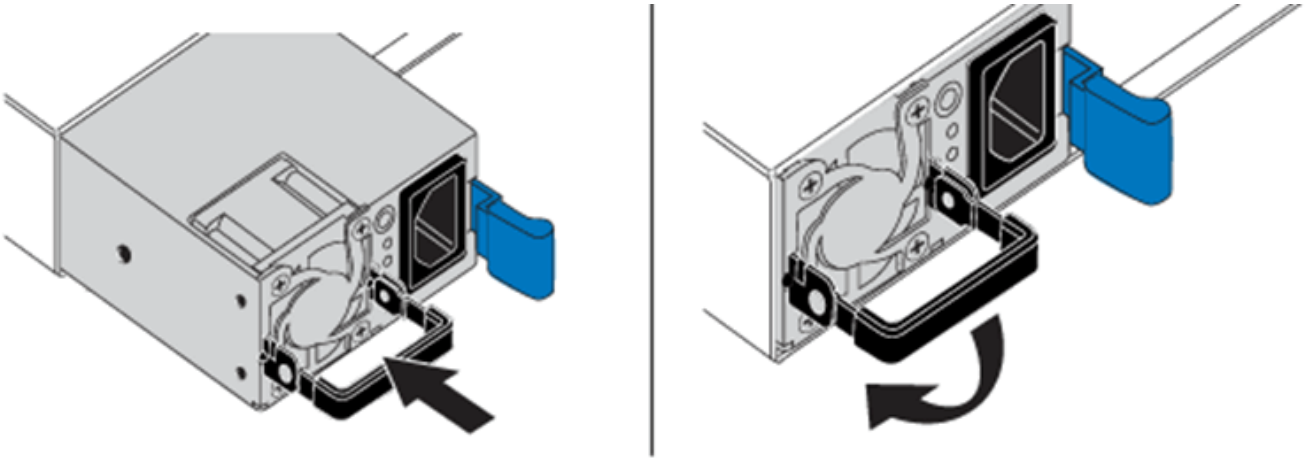

5. Plug in the power cord.
6. Return the faulty unit to NetApp by following the instructions in the box that was shipped to you.

# Find more information

- NetApp HCI Resources page
- SolidFire and Element Software Documentation Center

**Copyright Information**

Copyright © 2021 NetApp, Inc. All rights reserved. Printed in the U.S. No part of this document covered by copyright may be reproduced in any form or by any means-graphic, electronic, or mechanical, including photocopying, recording, taping, or storage in an electronic retrieval system-without prior written permission of the copyright owner.

Software derived from copyrighted NetApp material is subject to the following license and disclaimer:

THIS SOFTWARE IS PROVIDED BY NETAPP “AS IS” AND WITHOUT ANY EXPRESS OR IMPLIED WARRANTIES, INCLUDING, BUT NOT LIMITED TO, THE IMPLIED WARRANTIES OF MERCHANTABILITY AND FITNESS FOR A PARTICULAR PURPOSE, WHICH ARE HEREBY DISCLAIMED. IN NO EVENT SHALL NETAPP BE LIABLE FOR ANY DIRECT, INDIRECT, INCIDENTAL, SPECIAL, EXEMPLARY, OR CONSEQUENTIAL DAMAGES (INCLUDING, BUT NOT LIMITED TO, PROCUREMENT OF SUBSTITUTE GOODS OR SERVICES; LOSS OF USE, DATA, OR PROFITS; OR BUSINESS INTERRUPTION) HOWEVER CAUSED AND ON ANY THEORY OF LIABILITY, WHETHER IN CONTRACT, STRICT LIABILITY, OR TORT (INCLUDING NEGLIGENCE OR OTHERWISE) ARISING IN ANY WAY OUT OF THE USE OF THIS SOFTWARE, EVEN IF ADVISED OF THE POSSIBILITY OF SUCH DAMAGE.

NetApp reserves the right to change any products described herein at any time, and without notice. NetApp assumes no responsibility or liability arising from the use of products described herein, except as expressly agreed to in writing by NetApp. The use or purchase of this product does not convey a license under any patent rights, trademark rights, or any other intellectual property rights of NetApp.

The product described in this manual may be protected by one or more U.S. patents, foreign patents, or pending applications.

RESTRICTED RIGHTS LEGEND: Use, duplication, or disclosure by the government is subject to restrictions as set forth in subparagraph (c)(1)(ii) of the Rights in Technical Data and Computer Software clause at DFARS 252.277-7103 (October 1988) and FAR 52-227-19 (June 1987).

**Trademark Information**

NETAPP, the NETAPP logo, and the marks listed at http://www.netapp.com/TM are trademarks of NetApp, Inc. Other company and product names may be trademarks of their respective owners.