Get started with NetApp HCI

HCI

NetApp
July 21, 2022

This PDF was generated from https://docs.netapp.com/us-en/hci19/docs/task_hci_getstarted.html on July 21, 2022. Always check docs.netapp.com for the latest.

Table of Contents

Get started with NetApp HCI . . . 1
NetApp HCI installation and deployment overview . . . 1
Install H-series hardware . . . 7
Configure LACP for optimal storage performance . . . 23
Validate your environment with Active IQ Config Advisor . . . 23
Configure IPMI for each node . . . 26

Get started with NetApp HCI

NetApp HCI installation and deployment overview

Use these instructions to install and deploy NetApp HCI. These instructions include links to more details.

Here is an overview of the process:

- Prepare for installation
- Validate network readiness with NetApp Active IQ Config Advisor
- Work with your NetApp team
- Install NetApp HCI hardware
- Complete optional tasks after installing hardware
- Deploy NetApp HCI using the NetApp Deployment Engine (NDE)
- Manage NetApp HCI using the vCenter Plug-in
- Monitor or upgrade NetApp HCI with the Hybrid Cloud Control

Prepare for installation

Before you begin the installation, complete the *NetApp HCI Installation Discovery Workbook* pre-flight checklist sent to you prior to receiving the hardware.

Prepare the network and installation sites

Here is a simplified NetApp HCI network topology installation:

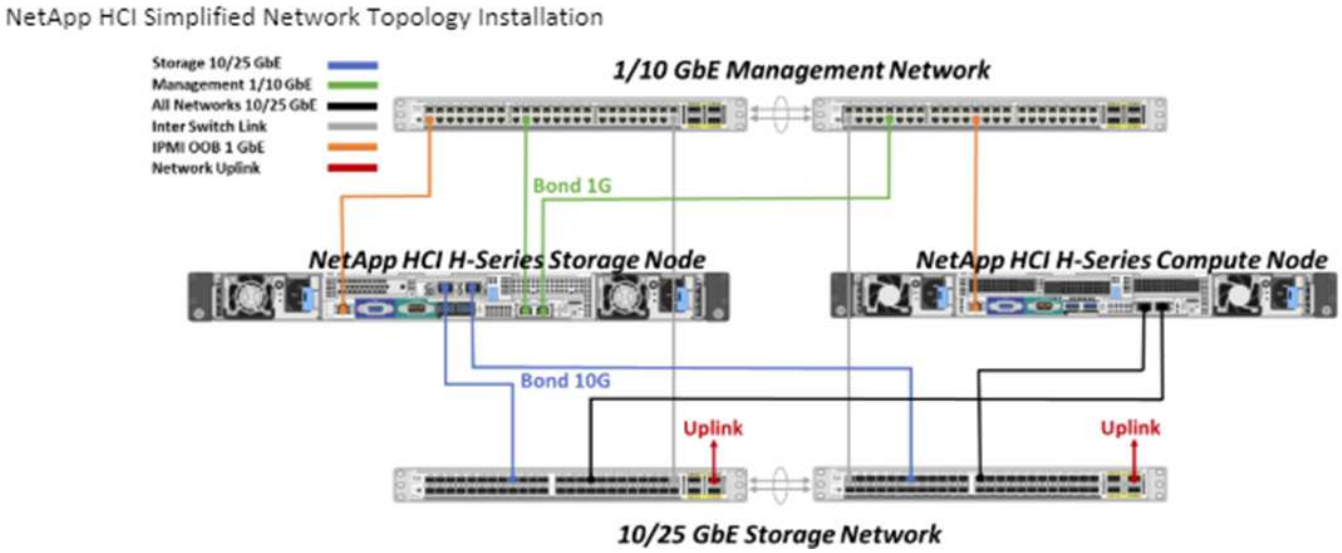

This is the simplified network topology for a single storage node and single compute node. The minimum cluster for NetApp HCI is two storage and two compute nodes.

> Your network topology might differ from what is shown here. This is an example only.

This setup uses two network cables on the compute nodes for connectivity to all NetApp HCI networks.

Read these resources:

- Use the *NetApp HCI Installation Discovery Workbook* to configure your network before the installation.
- For details and other supported configurations, see *TR-4820: NetApp HCI Networking Quick Planning Guide* and the *NetApp HCI Installation and Setup Instructions*.
- For information about NetApp HCI configurations smaller than four storage nodes, see *TR-4823: NetApp HCI 2-Node Storage Cluster*.
- For details about configuring Link Aggregation Control Protocol (LACP) on the switch ports used for each of the storage nodes, see Configure LCAP for optimal storage performance.

This setup consolidates all traffic onto two physical, redundant ports, reducing the cabling and streamlining network configuration. This configuration requires that the storage, vMotion and any virtual machine network segments use VLAN tagging. The management network segment can use native or tagged VLAN; however, native VLAN is the preferred mode so that NetApp Deployment Engine (NDE) can assign network resources in an automated manner (Zero Conf).

This mode requires vSphere Distributed Switches (vDS), which require VMware vSphere Enterprise Plus licensing.

Networking requirements before you begin

Here are highlights of prerequisites.

For prerequisites details, see Requirements for NetApp HCI deployment overview.

- Bond1G is a logical interface that combines 1GbE network ports on storage nodes and a management interface on compute nodes. This network is used for NDE API traffic. All nodes must be able to communicate over the management interface in the same L2 network.
- Bond10G is a logical interface that combines 10/25GbE ports and are used by NDE for beaconing and inventory. All nodes must be able to communicate over the Bond10G interface with non-fragmented jumbo frames.
- NDE requires at a minimum one manually assigned IP address on the Bond1G interface on one storage node. NDE will be run from this node.
- All nodes will have temporary IP addresses assigned by NDE discovery, which is accomplished by Automatic Private IP Addressing (APIPA).

> During the NDE process, all nodes will then be assigned permanent IP addresses and any APIPA assigned temporary IPs will be released.

- NDE requires separate networks for management, iSCSI and vMotion that are preconfigured on the switch network.

Validate network readiness with NetApp Active IQ Config Advisor

To ensure network readiness for NetApp HCI, install the NetApp Active IQ Config Advisor 5.8.1 or later. This network validation tool is located with other NetApp Support Tools. Use this tool to validate connectivity, VLAN IDs, IP address requirements, switch connectivity and more.

For details, see Validate your environment with Active IQ Config Advisor

Work with your NetApp team

Your NetApp team uses the NetApp Active IQ Config Advisor report and the *Discovery Workbook* to validate that your network environment is ready.

Install NetApp HCI hardware

NetApp HCI can be installed in different configurations:

- H410C compute nodes: Two-cable configuration or six-cable configuration
- H610C compute node: Two-cable configuration
- H615C compute node: Two-cable configuration
- H410S storage node
- H610S storage node

For precautions and details, see Install H-series hardware.

Steps

1. Install the rails and the chassis.
2. Install nodes in the chassis and install drives for storage nodes. (Applies only if you are installing H410C and H410S in a NetApp H-series chassis.)
3. Install the switches.
4. Cable the compute node.
5. Cable the storage node.
6. Connect the power cords.
7. Power on the NetApp HCI nodes.

Complete optional tasks after installing hardware

After installing the NetApp HCI hardware, you should perform some optional, yet recommended tasks.

Manage storage capacity across all chassis

Ensure that storage capacity is split evenly across all chassis containing storage nodes.

Configure IPMI for each node

After you have racked, cabled, and powered on your NetApp HCI hardware, you can configure Intelligent Platform Management Interface (IPMI) access for each node. Assign each IPMI port an IP address and change the default administrator IPMI password as soon as you have remote IPMI access to the node.

See Configure IPMI.

Deploy NetApp HCI using the NetApp Deployment Engine (NDE)

The NDE UI is the software wizard interface used to install NetApp HCI.

Launch the NDE UI

NetApp HCI uses a storage node management network IPv4 address for initial access to the NDE. As a best practice, connect from the first storage node.

Prerequisites

- You already assigned the initial storage node management network IP address manually or by using DHCP.
- You must have physical access to the NetApp HCI installation.

Steps

1. If you do not know the initial storage node management network IP, use the Terminal User Interface (TUI), which is accessed via keyboard and monitor on the storage node or use a USB stick.

   For details, see *Accessing the NetApp Deployment Engine*.

2. If you do know the IP address, from a web browser, connect to the Bond1G address of the primary node via HTTP, not HTTPS.

   Example: `http://<IP_address>:442/nde/`

Deploy NetApp HCI with the NDE UI

1. In the NDE, accept the prerequisites, check to use Active IQ, and accept license agreements.
2. Optionally, enable Data Fabric File Services by ONTAP Select and accept the ONTAP Select license.
3. Configure a new vCenter deployment. Click **Configure Using a Fully Qualified Domain Name** and enter both the vCenter Server Domain Name and DNS Server IP address.

   > It is strongly recommended to use the FQDN approach for vCenter installation.

4. Review that the inventory assessment of all nodes completed successfully.

   The storage node that is running the NDE is already checked.

5. Select all nodes and click **Continue**.
6. Configure network settings. Refer to the *NetApp HCI Installation Discovery Workbook* for the values to use.
7. Click the blue box to launch the easy form.

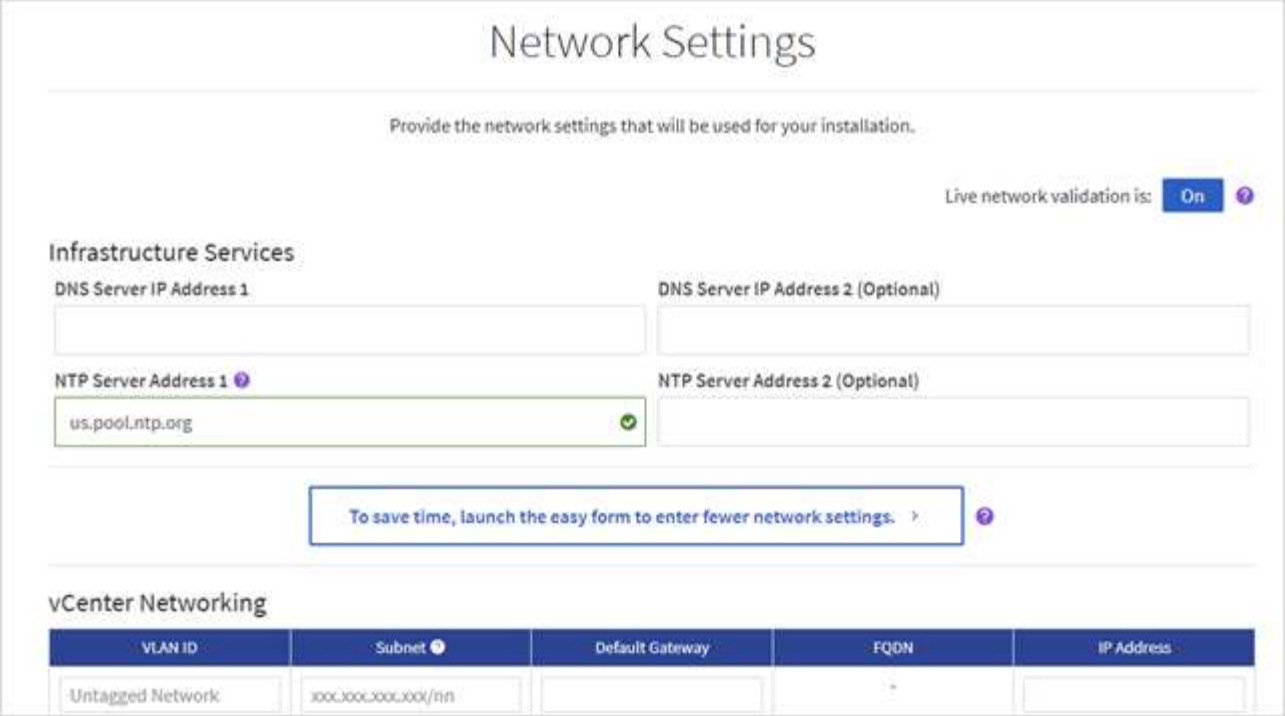

8. On the Network Settings Easy Form:
   a. Type the Naming Prefix. (Refer to the System Details of the *NetApp HCI Installation Discovery Workbook*.)
   b. Click **No** for Will you assign VLAN IDs? (You assign them later in the main Network Settings page.)
   c. Type the subnet CIDR, default gateway, and starting IP address for the management, vMotion, and iSCI networks according to your workbook. (Refer to the IP Assignment Method section of the *NetApp HCI Installation Discovery Workbook* for these values.)
   d. Click **Apply to Network Settings**.
9. Join an existing vCenter (optional).
10. Record node serial numbers in the *NetApp HCI Installation Discovery Workbook*.
11. Specify a VLAN ID for the vMotion Network and any network that requires VLAN tagging. See the *NetApp HCI Installation Discovery Workbook*.
12. Download your configuration as a .CSV file.
13. Click **Start Deployment**.
14. Copy and save the URL that appears.

> It can take about 45 minutes to complete the deployment.

Verify the installation using the vSphere Web Client

1. Launch the vSphere Web Client and log in using the credentials specified during NDE use.

   You must append `@vsphere.local` to the user name.

2. Verify that no alarms are present.
3. Verify that the vCenter, mNode, and ONTAP Select (optional) appliances are running without warning

icons.

4. Observe that the two default datastores (NetApp-HCI-Datastore_01 & 02) are created.
5. Select each datastore and ensure that all compute nodes are listed in the Hosts tab.
6. Validate vMotion and Datastore-02.
   a. Migrate the vCenter Server to NetApp-HCI-Datastore-02 (storage only vMotion).
   b. Migrate the vCenter Server to each of the compute nodes (compute only vMotion).
7. Go to the NetApp Element Plug-in for vCenter Server and ensure that the cluster is visible.
8. Ensure no alerts appear on the Dashboard.

Manage NetApp HCI using the vCenter Plug-in

After you install NetApp HCI, you can configure clusters, volumes, datastores, logs, access groups, initiators, and Quality of Service (QoS) policies by using the NetApp Element Plug-in for vCenter Server.

For details, see *NetApp Element Plug-in for vCenter Server documentation*.

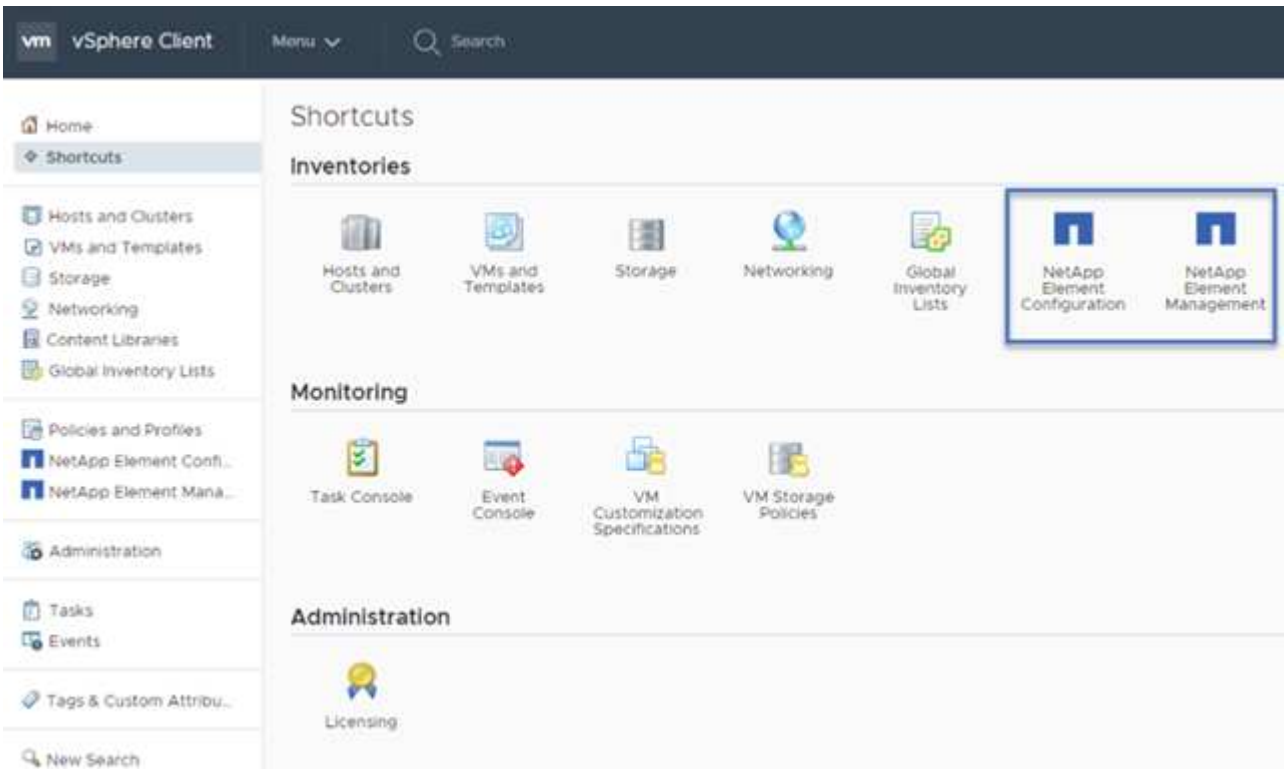

Monitor or upgrade NetApp HCI with the Hybrid Cloud Control

You can optionally use the NetApp HCI Hybrid Cloud Control to monitor, upgrade, or expand your system.

You log in to NetApp Hybrid Cloud Control by browsing to the IP address of the management node.

Using the Hybrid Cloud Control, you can do the following:

- Monitor your NetApp HCI installation
- Upgrade your NetApp HCI system
- Expand your NetApp HCI storage or compute resources

Steps

1. Open the IP address of the management node in a web browser. For example:

```
https://<ManagementNodeIP>
```

2. Log in to NetApp Hybrid Cloud Control by providing the NetApp HCI storage cluster administrator credentials.

   The NetApp Hybrid Cloud Control interface appears.

Find more information

- NetApp HCI Resources page
- NetApp HCI Installation and Setup Instructions
- TR-4820: NetApp HCI Networking Quick Planning Guide
- NetApp Element Plug-in for vCenter Server documentation
- NetApp Configuration Advisor 5.8.1 or later network validation tool
- NetApp SolidFire Active IQ Documentation

Install H-series hardware

Before you get started with using NetApp HCI, you should install the storage and compute nodes correctly.

See the poster for a visual representation of the instructions.

- Workflow diagrams
- Prepare for installation
- Install the rails
- Install the node/chassis
- Install the switches
- Cable the nodes
- Power on the nodes
- Configure NetApp HCI
- Perform post-configuration tasks

Workflow diagrams

The workflow diagrams here provide a high-level overview of the installation steps. The steps vary slightly depending on the H-series model.

- H410C and H410S
- H610C and H615C

- H610S

H410C and H410S

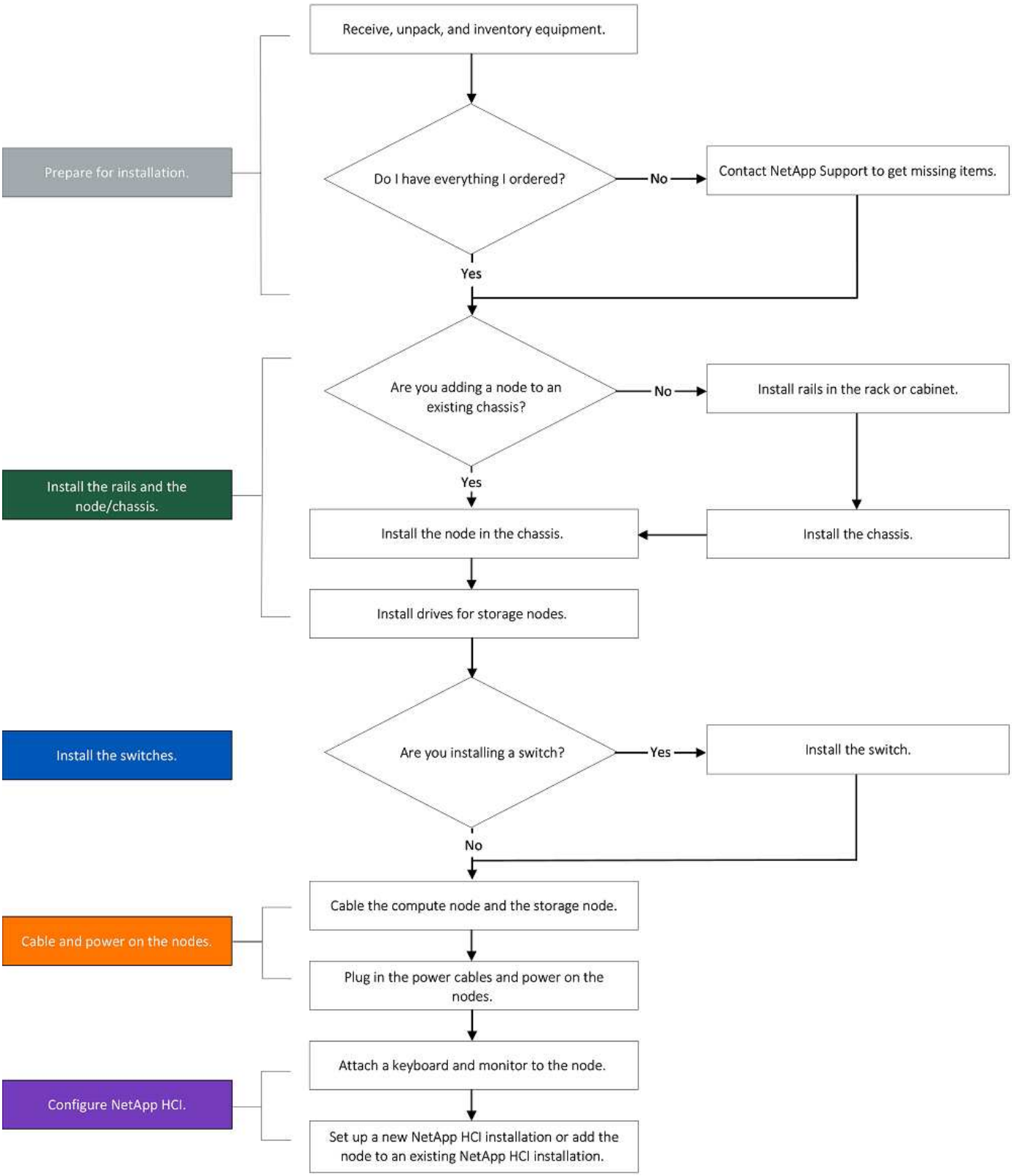

H610C and H615C

The terms "node" and "chassis" are used interchangeably in the case of H610C and H615C, because node and chassis are not separate components unlike in the case of a 2U, four-node chassis.

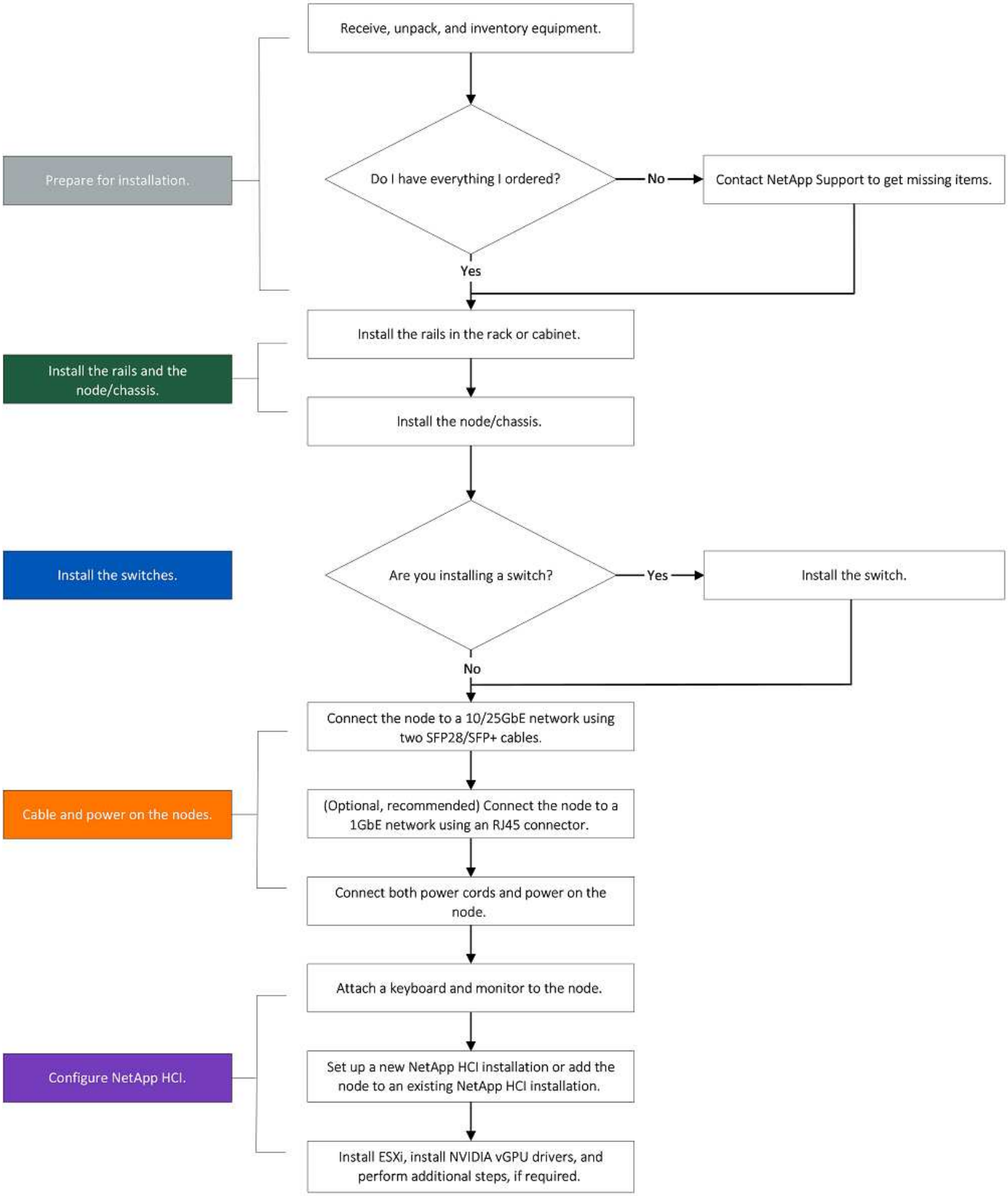
Prepare for installation.
Receive, unpack, and inventory equipment.
Do I have everything I ordered?
No
Contact NetApp Support to get missing items.
Yes
Install the rails and the node/chassis.
Install the rails in the rack or cabinet.
Install the node/chassis.
Install the switches.
Are you installing a switch?
Yes
Install the switch.
No
Cable and power on the nodes.
Connect the node to a 10/25GbE network using two SFP28/SFP+ cables.
(Optional, recommended) Connect the node to a 1GbE network using an RJ45 connector.
Connect both power cords and power on the node.
Configure NetApp HCI.
Attach a keyboard and monitor to the node.
Set up a new NetApp HCI installation or add the node to an existing NetApp HCI installation.
Install ESXi, install NVIDIA vGPU drivers, and perform additional steps, if required.

H610S

The terms "node" and "chassis" are used interchangeably in the case of H610C and H615C, because node and chassis are not separate components unlike in the case of a 2U, four-node chassis.

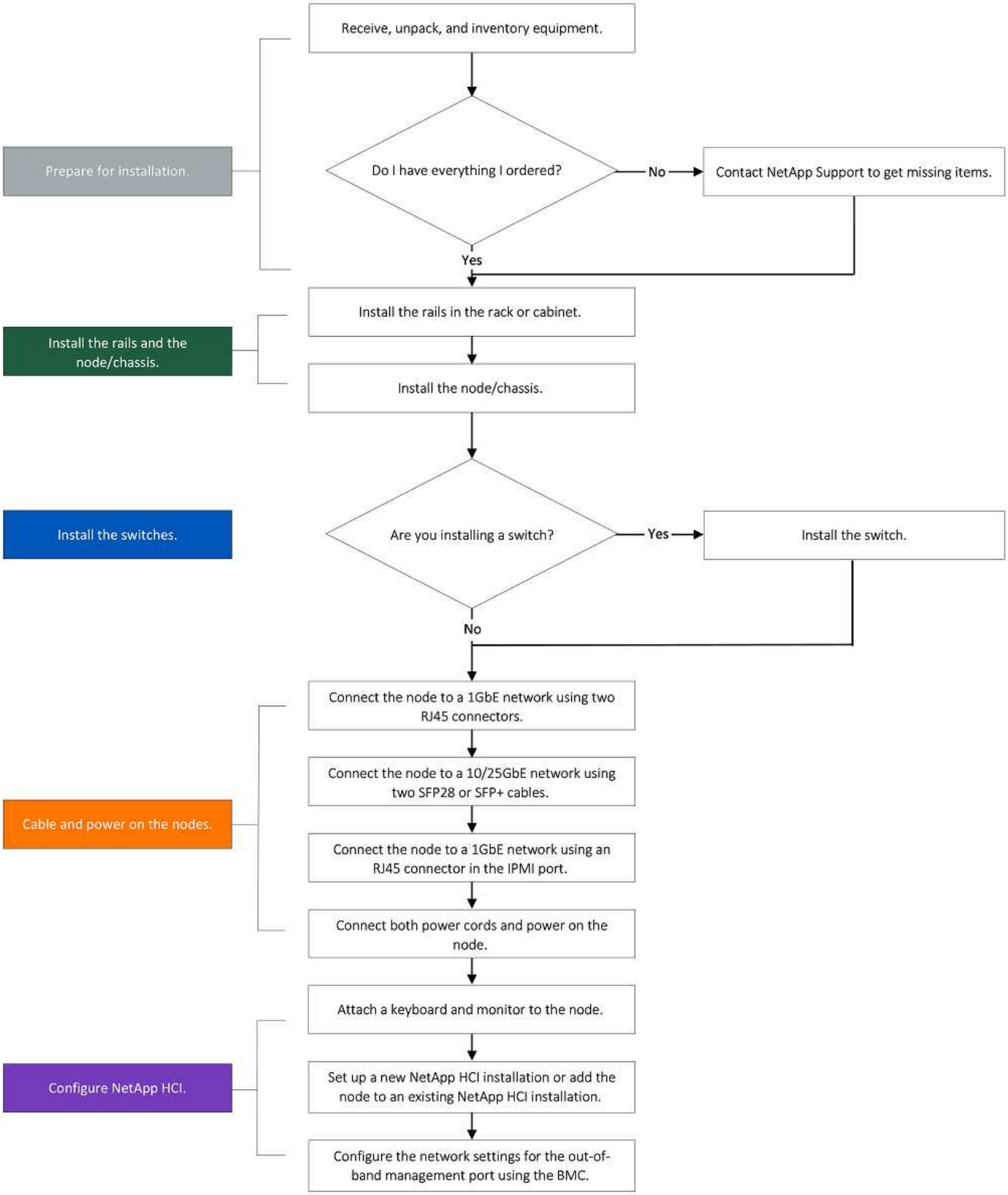
Prepare for installation.
Receive, unpack, and inventory equipment.
Do I have everything I ordered?
No
Contact NetApp Support to get missing items.
Yes
Install the rails and the node/chassis.
Install the rails in the rack or cabinet.
Install the node/chassis.
Install the switches.
Are you installing a switch?
Yes
Install the switch.
No
Cable and power on the nodes.
Connect the node to a 1GbE network using two RJ45 connectors.
Connect the node to a 10/25GbE network using two SFP28 or SFP+ cables.
Connect the node to a 1GbE network using an RJ45 connector in the IPMI port.
Connect both power cords and power on the node.
Configure NetApp HCI.
Attach a keyboard and monitor to the node.
Set up a new NetApp HCI installation or add the node to an existing NetApp HCI installation.
Configure the network settings for the out-of-band management port using the BMC.

Prepare for installation

In preparation for installation, inventory the hardware that was shipped to you, and contact NetApp Support if any of the items are missing.

Ensure that you have the following items at your installation location:

- Rack space for the system.

Node type	Rack space
H410C and H410S nodes	Two rack unit (2U)
H610C node	2U
H615C and H610S nodes	One rack unit (1U)

- SFP28/SFP+ direct-attach cables or transceivers
- CAT5e or higher cables with RJ45 connector
- A keyboard, video, mouse (KVM) switch to configure your system
- USB stick (optional)

The hardware that is shipped to you depends on what you order. A new 2U, four-node order includes the chassis, bezel, slide rail kit, drives for storage nodes, storage and compute nodes, and power cables (two per chassis). If you order H610S storage nodes, the drives will come installed in the chassis.

While installing the hardware, ensure that you remove all packing material and wrapping from the unit. This will prevent the nodes from overheating and shutting down.

Install the rails

The hardware order that was shipped to you includes a set of slide rails. You will need a screwdriver to complete the rail installation. The installation steps vary slightly for each node model.

Install hardware from the bottom of the rack up to the top to prevent the equipment from toppling over. If your rack includes stabilizing devices, install them before you install the hardware.

- H410C and H410S
- H610C
- H610S and H615C

H410C and H410S

H410C and H410S nodes are installed in 2U, four-node H-Series chassis, which is shipped with two sets of adapters. If you want to install the chassis in a rack with round holes, use the adapters appropriate for a rack with round holes. The rails for H410C and H410S nodes fit a rack between 29 inches and 33.5 inches in depth. When the rail is fully contracted, it is 28 inches long, and the front and rear sections of the rail are held together by only one screw.

If you install the chassis onto a fully contracted rail, the front and rear sections of the rail might separate.

Steps

1. Align the front of the rail with the holes on the front post of the rack.
2. Push the hooks on the front of the rail into the holes on the front post of the rack and then down, until the spring-loaded pegs snap into the rack holes.
3. Attach the rail to the rack with screws. Here is an illustration of the left rail being attached to the front of the rack:
4. Extend the rear section of the rail to the rear post of the rack.
5. Align the hooks on the rear of the rail with the appropriate holes on the rear post ensuring that the front and the back of the rail are on the same level.
6. Mount the rear of the rail onto the rack, and secure the rail with screws.
7. Perform all the above steps for the other side of the rack.

H610C

Here is an illustration for installing rails for an H61OC compute node:

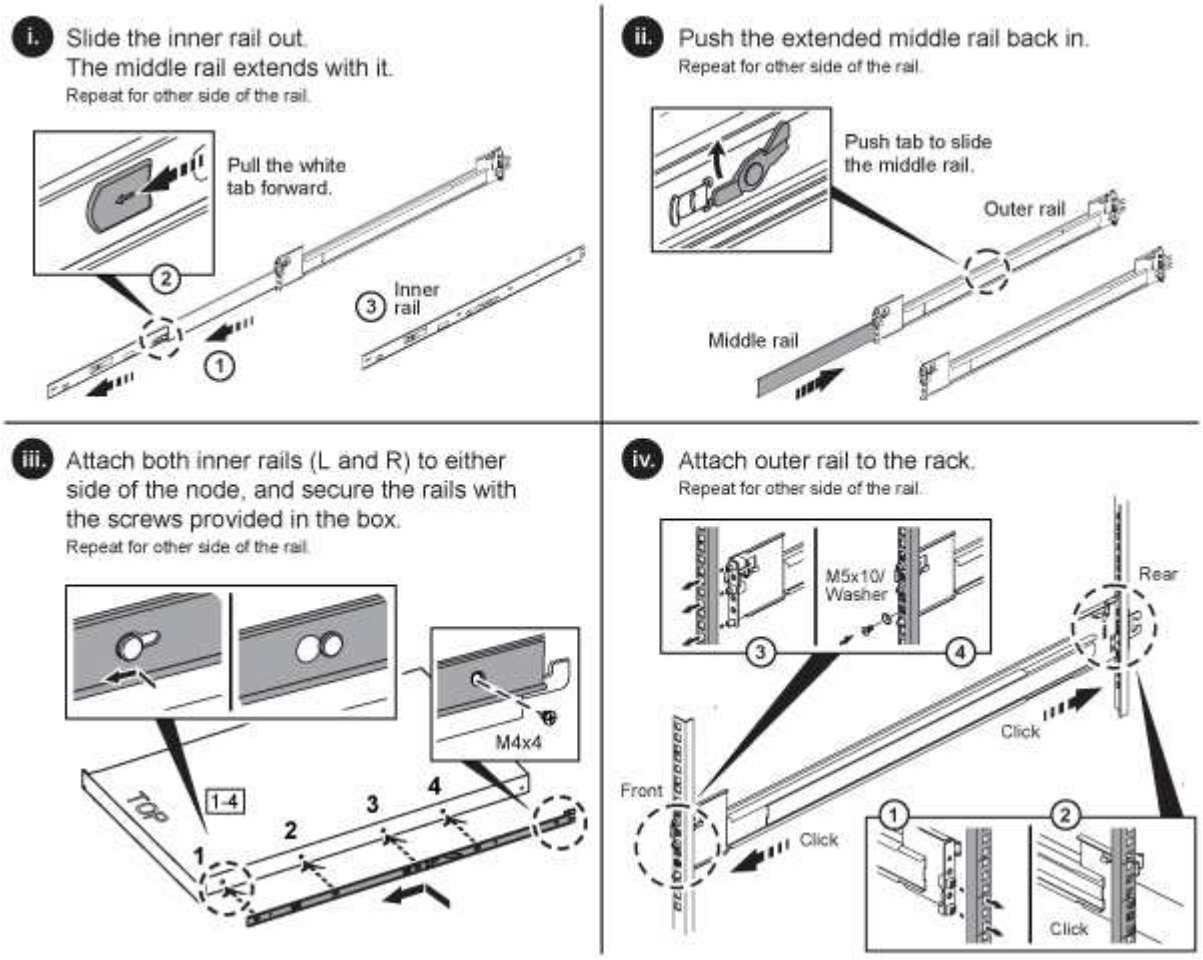

H610S and H615C

Here is an illustration for installing rails for an H610S storage node or an H615C compute node:

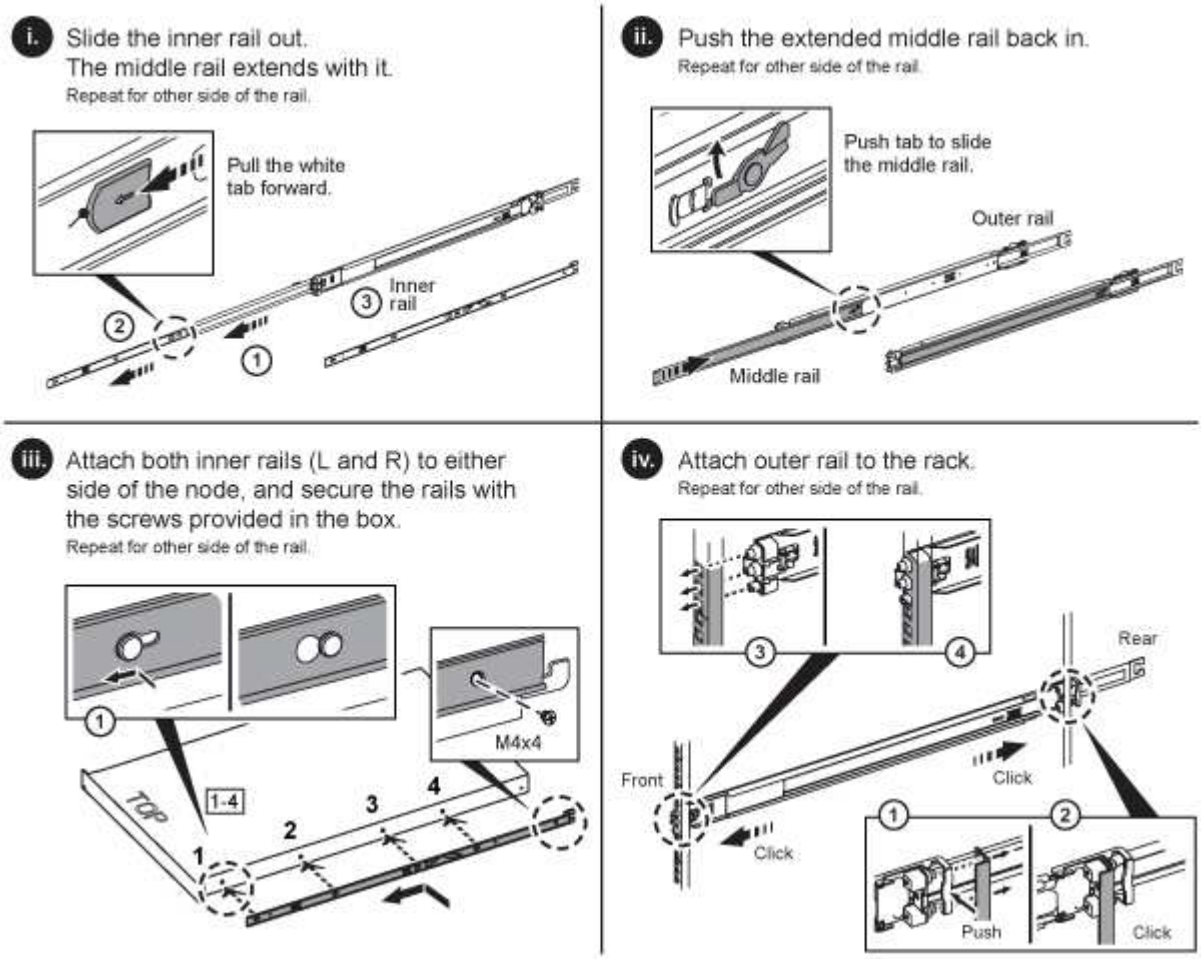

There are left and right rails on the H610S and H615C. Position the screw hole towards the bottom so that the H610S/H615C thumbscrew can secure the chassis to the rail.

Install the node/chassis

You install the H410C compute node and H410S storage node in a 2U, four-node chassis. For H610C, H615C, and H610S, install the chassis/node directly onto the rails in the rack.

Starting with NetApp HCI 1.8, you can set up a storage cluster with two or three storage nodes.

Remove all the packing material and wrapping from the unit. This prevents the nodes from overheating and shutting down.

- H410C and H410S nodes
- H610C node/chassis
- H610S and H615C node/chassis

H410C and H410S nodes

Steps

1. Install the H410C and H410S nodes in the chassis. Here is a rear-view example of a chassis with four nodes installed:

2. Install drives for H410S storage nodes.

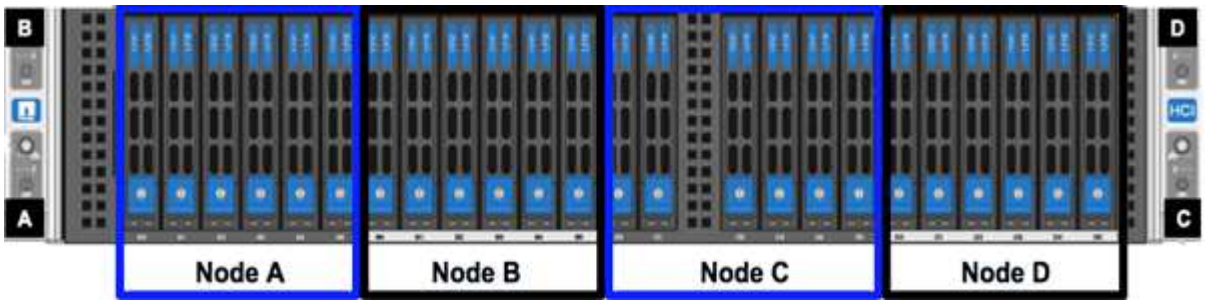

H610C node/chassis

In the case of H610C, the terms "node" and "chassis" are used interchangeably because node and chassis are not separate components, unlike in the case of the 2U, four-node chassis.

Here is an illustration for installing the node/chassis in the rack:

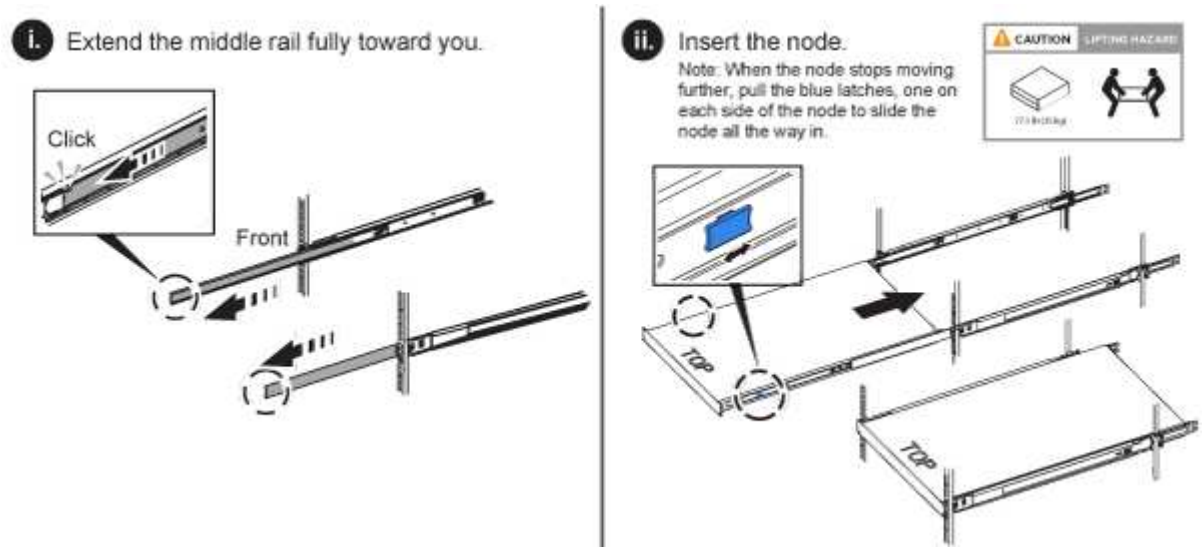

H610S and H615C node/chassis

In the case of H615C and H610S, the terms "node" and "chassis" are used interchangeably because node and chassis are not separate components, unlike in the case of the 2U, four-node chassis.

Here is an illustration for installing the node/chassis in the rack:

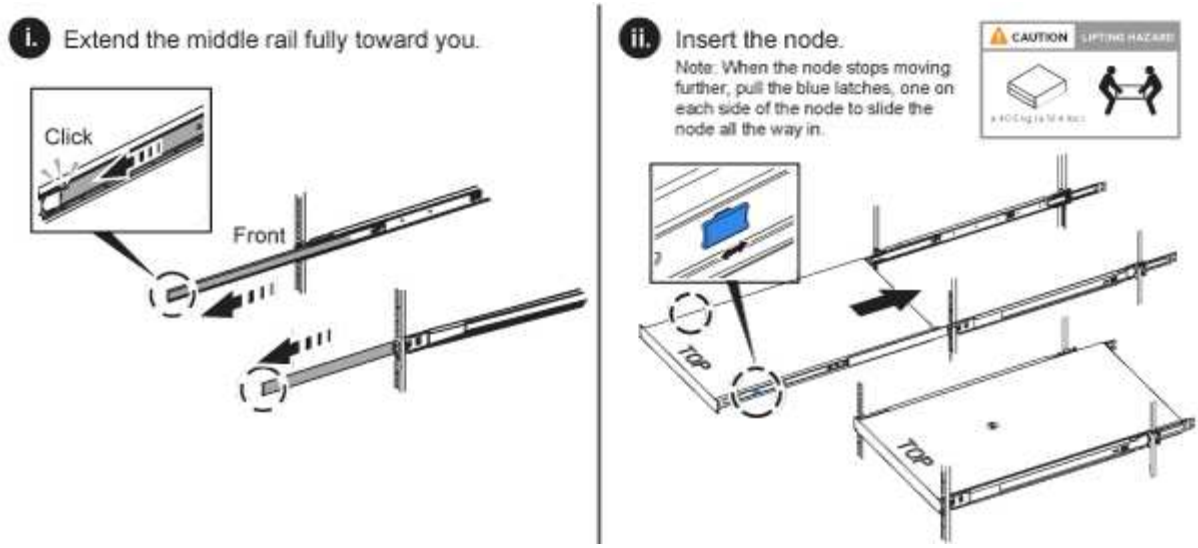

Install the switches

If you want to use Mellanox SN2010, SN2100, and SN2700 switches in your NetApp HCI installation, follow the instructions provided here to install and cable the switches:

- Mellanox hardware user manual
- TR-4836: NetApp HCI with Mellanox SN2100 and SN2700 Switch Cabling Guide (login required)

Cable the nodes

If you are adding nodes to an existing NetApp HCI installation, ensure that the cabling and network configuration of the nodes that you add are identical to the existing installation.

> Ensure that the airflow vents at the rear of the chassis are not blocked by cables or labels. This can lead to premature component failures due to overheating.

- H410C compute node and H410S storage node
- H610C compute node
- H615C compute node
- H610S storage node

H410C compute node and H410S storage node

You have two options for cabling the H410C node: using two cables or using six cables.

Here is the two-cable configuration:

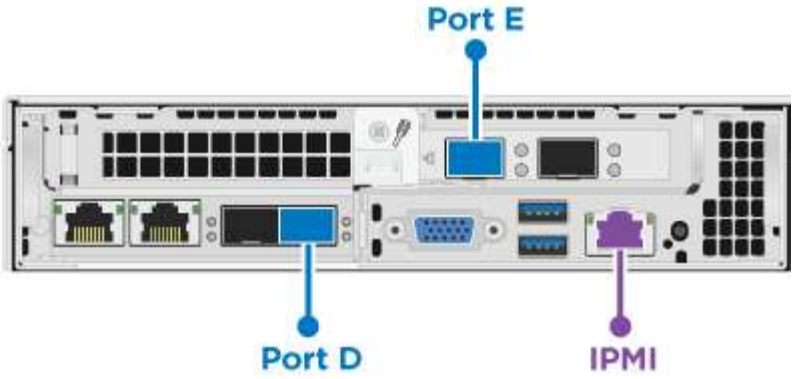

For ports D and E, connect two SFP28/SFP+ cables or transceivers for shared management, virtual machines, and storage connectivity.

(Optional, recommended) Connect a CAT5e cable in the IPMI port for out-of-band management connectivity.

Here is the six-cable configuration:

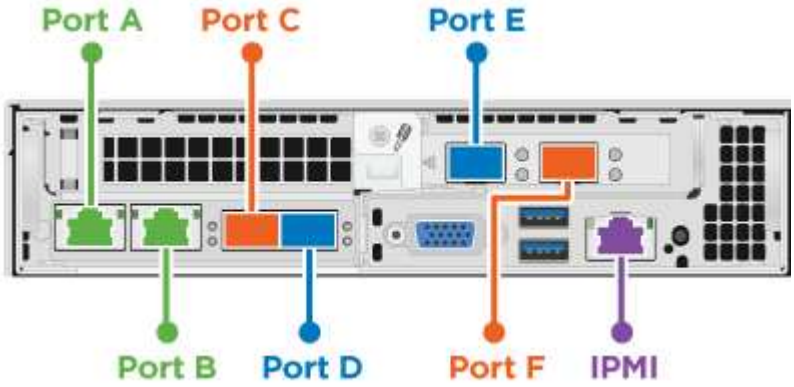

For ports A and B, connect two CAT5e or higher cables in ports A and B for management connectivity.

For ports C and F, connect two SFP28/SFP+ cables or transceivers for virtual machine connectivity.

For ports D and E, connect two SFP28/SFP+ cables or transceivers for storage connectivity.

(Optional, recommended) Connect a CAT5e cable in the IPMI port for out-of-band management connectivity.

Here is the cabling for the H410S node:

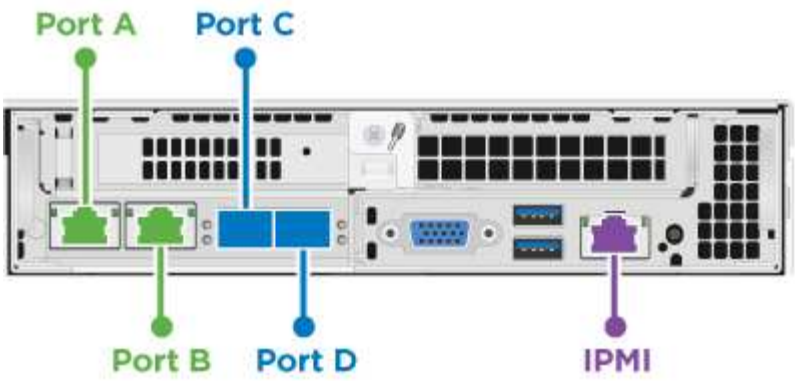

For ports A and B, connect two CAT5e or higher cables in ports A and B for management connectivity.

For ports C and D, connect two SFP28/SFP+ cables or transceivers for storage connectivity.

(Optional, recommended) Connect a CAT5e cable in the IPMI port for out-of-band management connectivity.

After you cable the nodes, connect the power cords to the two power supply units per chassis and plug them into 240V PDU or power outlet.

H610C compute node

Here is the cabling for the H610C node:

> H610C nodes are deployed only in the two-cable configuration. Ensure that all the VLANs are present on ports C and D.

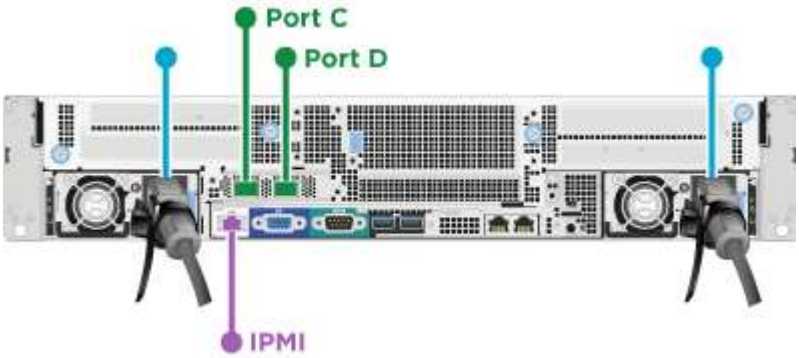

For ports C and D, connect the node to a 10/25GbE network using two SFP28/SFP+ cables.

(Optional, recommended) Connect the node to a 1GbE network using an RJ45 connector in the IPMI port.

Connect both power cables to the node, and plug the power cables to a 200-240V power outlet.

H615C compute node

Here is the cabling for the H615C node:

> H615C nodes are deployed only in the two-cable configuration. Ensure that all the VLANs are present on ports A and B.

For ports A and B, connect the node to a 10/25GbE network using two SFP28/SFP+ cables.

(Optional, recommended) Connect the node to a 1GbE network using an RJ45 connector in the IPMI port.

Connect both power cables to the node, and plug the power cables to a 110-140V power outlet.

H610S storage node

Here is the cabling for the H610S node:

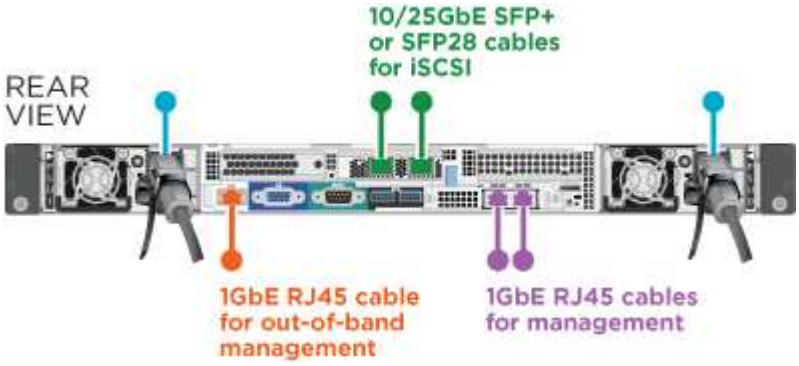

Connect the node to a 1GbE network using two RJ45 connector in the IPMI port.

Connect the node to a 10/25GbE network using two SFP28 or SFP+ cables.

Connect the node to a 1GbE network using an RJ45 connector in the IPMI port.

Connect both power cables to the node.

Power on the nodes

It takes approximately six minutes for the nodes to boot.

Here is an illustration that shows the power button on the NetApp HCI 2U chassis:

Here is an illustration that shows the power button on the H610C node:

Here is an illustration that shows the power button on the H615C and H610S nodes:

Configure NetApp HCI

Choose from one of the following options:

- New NetApp HCI installation
- Expand an existing NetApp HCI installation

New NetApp HCI installation

Steps

1. Configure an IPv4 address on the management network (Bond1G) on one NetApp HCI storage node.

   > If you are using DHCP on the management network, you can connect to the DHCP-acquired IPv4 address of the storage system.

   a. Plug in a keyboard, video, mouse (KVM) to the back of one storage node.

   b. Configure the IP address, subnet mask, and gateway address for Bond1G in the user interface. You can also configure a VLAN ID for the Bond1G network.

2. Using a supported web browser (Mozilla Firefox, Google Chrome, or Microsoft Edge), navigate to the NetApp Deployment Engine by connecting to the IPv4 address that you configured in Step 1.

3. Use the NetApp Deployment Engine user interface (UI) to configure NetApp HCI.

All the other NetApp HCI nodes will be discovered automatically.

Expand an existing NetApp HCI installation

Steps

1. Open the IP address of the management node in a web browser.
2. Log in to NetApp Hybrid Cloud Control by providing the NetApp HCI storage cluster administrator credentials.
3. Follow the steps in the wizard to add storage and/or compute nodes to your NetApp HCI installation.

To add H410C compute nodes, the existing installation must run NetApp HCI 1.4 or later. To add H615C compute nodes, the existing installation must run NetApp HCI 1.7 or later.

The newly installed NetApp HCI nodes on the same network will be discovered automatically.

Perform post-configuration tasks

Depending on the type of node you have, you might need to perform additional steps after you install the hardware and configure NetApp HCI.

- H610C node
- H615C and H610S nodes

H610C node

Install the GPU drivers in ESXi for each H610C node that you installed, and validate their functionality.

H615C and H610S nodes

Steps

1. Use a web browser and navigate to the default BMC IP address: `192.168.0.120`
2. Log in using user name `root` and password `calvin`.
3. From the node management screen, navigate to **Settings > Network Settings**, and configure the network parameters for the out-of-band management port.

If your H615C node has GPUs in it, install GPU drivers in ESXi for each H615C node that you installed, and validate their functionality.

Find more information

- NetApp HCI Resources page
- NetApp Element Plug-in for vCenter Server
- *TR-4820: NetApp HCI Networking Quick Planning Guide*
- NetApp Configuration Advisor 5.8.1 or later network validation tool

Configure LACP for optimal storage performance

For optimal NetApp HCI storage cluster performance, you should configure Link Aggregation Control Protocol (LACP) on the switch ports used for each of the storage nodes.

Before you begin

- You have configured the switch ports connected to the 10/25GbE interfaces of NetApp HCI storage nodes as LACP port channels.
- You have set the LACP timers on the switches handling storage traffic to “fast mode (1s)” for optimal failover detection time. During deployment, the Bond1G interfaces on all storage nodes are automatically configured for active/passive mode.
- You have configured Cisco Virtual PortChannel (vPC) or the equivalent switch stacking technology for the switches handling the storage network. Switch stacking technology eases configuration of LACP and port channels, and provides a loop-free topology between switches and the 10/25GbE ports on the storage nodes.

Steps

1. Follow your switch vendor recommendations for enabling LACP on the switch ports used for NetApp H-series storage nodes.
2. Change the bond mode on all storage nodes to LACP in the on-node user interface (also known as the terminal user interface, or TUI) before you deploy NetApp HCI.

Find more information

- NetApp HCI Resources page
- NetApp Element Plug-in for vCenter Server

Validate your environment with Active IQ Config Advisor

Before you rack NetApp HCI hardware and perform the installation of NetApp HCI, you need to verify that your environment meets NetApp HCI networking requirements. Active IQ Config Advisor runs checks on your environment by validating network, switch, and VMware vSphere configurations. The tool generates a report which you can use to help you resolve issues, and you can forward the report to your Professional Services engineer to prepare and schedule an installation.

Install Active IQ Config Advisor

Download and install Active IQ Config Advisor on a PC that has access to the NetApp HCI networks.

Steps

1. In a web browser, select **Tools** from the NetApp Support menu, search for Active IQ Config Advisor, and download the tool.

   NetApp Support Site > Tools.

   After you agree to the End User License Agreement (EULA), the Download page appears. Microsoft

Windows, Linux, and Mac binaries are available in the **Client Tool** pane.

2. Run the executable.
3. Select a language, and click **OK**.
4. Click **Next**.
5. Read the EULA and click **I Agree**.
6. Click **Install**.
7. Ensure that **Run Active IQ Config Advisor** is selected, and click **Finish**.

   After a short delay, the Active IQ Config Advisor UI opens in a new browser window or tab.

Use Active IQ Config Advisor

Active IQ Config Advisor runs in a browser window, collects information about your network and environment, and generates a report you can use to resolve any network or configuration issues that might interfere with NetApp HCI deployment.

Before you begin

You have installed Active IQ Config Advisor on a device that can access the management network, VMware vCenter Server networking (if you are joining an existing VMware installation), and switches that will be used for NetApp HCI.

> If you are using Mellanox switches and NetApp Professional Services is configuring them as part of deployment, you do not need to provide switch information.

About this task

Active IQ Config Advisor performs only read-only checks to gather information. No configuration is modified as part of the collection.

Steps

1. Open Active IQ Config Advisor.

   Config Advisor appears with the **Basic Settings** window in a web browser. Here, you can define global collection settings and encrypt the collection results.

2. Enter a passphrase in the **Encryption Settings** section to encrypt the collection project.

   This ensures that only you are able to load this collection project after it is created.

3. Identify this collection report as yours by entering your name and email address in the **User Verification** section.
4. Click **Save**.
5. Click **Create a new data collection**.
6. Select **Solution Based** in the **Collection Type** drop-down menu.
7. Select **NetApp HCI Pre Deployment** in the **Profile** drop-down menu.
8. For each type of device in the **Type** column, select the number of that type of device in your NetApp HCI network in the **Actions** drop-down menu.

   For example, if you have three Cisco switches, choose 3 from the **Actions** column drop-down menu in that

row. Three rows appear, one for each Cisco switch you identified.

> If you are using Mellanox switches and NetApp Professional Services is configuring them as part of deployment, you do not need to provide switch information.

9. For any switches that you identified, enter the management IP address and administrator credentials.
10. For any VMware vCenter Servers you identified, do one of the following:
    - If you are deploying a new vCenter Server, provide the IP address or Fully Qualified Domain Name (FQDN) that is planned for the server.
    - If you are joining an existing vCenter Server, provide the IP address or FQDN and the administrator credentials for the server.
11. Optional: If you added information for switches, enter the number of compute and storage nodes in the **Switch Validation** section.
12. Choose which compute node cabling configuration you plan to use in the **Compute node network** section.
13. Enter individual switch ports and any VLAN tags you plan to use for the management, vMotion, and storage networks for any switches in the **Compute node network** section.
14. Enter individual switch ports and any VLAN tags you plan to use for the management and storage networks for any switches in the **Storage node network** section.
15. In the **Network Settings Check** section, enter the IP addresses and gateway IP address for the management network, followed by lists of servers for DNS, NTP, and vCenter Server (if you are deploying a new vCenter Server with NetApp HCI).

    This section enables Active IQ Config Advisor to ensure that the management network is available for use, and also ensures that services such as DNS and NTP are working properly.

16. Click **Validate** to ensure all of the IP address information and credentials you have entered are valid.
17. Click **Save or Collect**.

    This starts the collection process, and you can see the progress as the collection runs along with a real-time log of the collection commands. The **Progress** column shows color-coded progress bars for each collection task.

    The progress bars use the following colors to show status:

    - **Green**: The collection has finished with no command failures. You can see the deployment risks and recommendations by clicking the **View & Analyze** icon in the **Actions** menu.
    - **Yellow**: The collection has finished with some command failures. You can see the deployment risks and recommendations by clicking the **View & Analyze** icon in the **Actions** menu.
    - **Red**: The collection has failed. You need to resolve the errors and run the collection again.
18. Optional: When the collection is complete, you can click the binocular icon for any collection row to see the commands that were run and the data that was collected.
19. Select the **View & Analyze** tab.

    This page shows a general health report of your environment. You can select a section of the pie chart to see more details about those specific checks or descriptions of problems, along with recommendations on resolving any issues that might interfere with successful deployment. You can resolve these issues yourself

or request help from NetApp Professional Services.

20. Click **Export** to export the collection report as a PDF or Microsoft Word document.

> PDF and Microsoft Word document outputs include the switch configuration information for your deployment, which NetApp Professional Services uses to verify the network settings.

21. Send the exported report file to your NetApp Professional Services representative.

Find more information

- NetApp HCI Resources page
- NetApp Element Plug-in for vCenter Server

Configure IPMI for each node

After you have racked, cabled, and powered on your NetApp HCI hardware, you can configure Intelligent Platform Management Interface (IPMI) access for each node. Assign each IPMI port an IP address and change the default IPMI administrator password as soon as you have remote IPMI access to the node.

Prerequisites

After you have validated that your environment is ready to support NetApp HCI and resolved any potential issues, you need to complete some final tasks before deployment.

- Ensure you have a successful report from Active IQ Config Advisor.
- Gather all relevant information about your network, current or planned VMware infrastructure, and planned user credentials.
- Rack, cable, and power on the NetApp HCI installation.

Manually assign the IPMI port IP address

Dynamic Host Configuration Protocol (DHCP) is enabled by default for the IPMI port of each NetApp HCI node. If your IPMI network does not use DHCP, you can manually assign a static IPv4 address to the IPMI port.

Before you begin

Ensure that you have a keyboard, video, and mouse (KVM) switch or monitor and keyboard you can use to access the BIOS of each node.

About this task

Use the arrow keys to navigate in the BIOS. Select a tab or option by pressing `Enter`. Go back to previous screens by pressing `ESC`.

Steps

1. Power on the node.
2. Upon booting, enter the BIOS by pressing the `Del` key.
3. Select the IPMI tab.

4. Select **BMC Network Configuration** and press `Enter`.
5. Choose **Yes** and press `Enter`.
6. Select **Configuration Address Source** and press `Enter`.
7. Choose **Static** and press `Enter`.
8. Select **Station IP address** and enter a new IP address for the IPMI port. Press `Enter` when finished.
9. Select **Subnet mask** and enter a new subnet mask for the IPMI port. Press `Enter` when finished.
10. Select **Gateway IP address** and enter a new gateway IP address for the IPMI port. Press `Enter` when finished.
11. Connect one end of an Ethernet cable to the IPMI port and the other end to a switch.

    The IPMI port for this node is ready to use.

12. Repeat this procedure for any other NetApp HCI nodes with IPMI ports that are not configured.

Change the default IPMI password for H410C and H410S nodes

You should change the default password for the IPMI administrator account on each compute and storage node as soon as you configure the IPMI network port.

Before you begin

You have configured the IPMI IP address for each compute and storage node.

Steps

1. Open a web browser on a computer that can reach the IPMI network and browse to the IPMI IP address for the node.
2. Enter the user name `ADMIN` and password `ADMIN` in the login prompt.
3. Upon logging in, click the **Configuration** tab.
4. Click **Users**.
5. Select the `ADMIN` user and click **Modify User**.
6. Select the **Change Password** check box.
7. Enter a new password in the **Password** and **Confirm Password** fields.
8. Click **Modify**, and then click **OK**.
9. Repeat this procedure for any other NetApp HCI H410C and H410S nodes with default IPMI passwords.

Change the default IPMI password for H610C, H615C, and H610S nodes

You should change the default password for the IPMI administrator account on each compute and storage node as soon as you configure the IPMI network port.

Before you begin

You have configured the IPMI IP address for each compute and storage node.

Steps

1. Open a web browser on a computer that can reach the IPMI network and browse to the IPMI IP address for the node.

2. Enter the user name `root` and password `calvin` in the login prompt.
3. Upon logging in, click the menu navigation icon at the top left of the page to open the sidebar drawer.
4. Click **Settings**.
5. Click **User Management**.
6. Select the **Administrator** user from the list.
7. Enable the **Change Password** check box.
8. Enter a new, strong password in the **Password** and **Confirm Password** fields.
9. Click **Save** at the bottom of the page.
10. Repeat this procedure for any other NetApp HCI H610C, H615C, or H610S nodes with default IPMI passwords.

Find more information

- NetApp SolidFire Active IQ Documentation
- NetApp Element Plug-in for vCenter Server
- NetApp HCI Resources Page

Copyright Information

Copyright © 2022 NetApp, Inc. All rights reserved. Printed in the U.S. No part of this document covered by copyright may be reproduced in any form or by any means-graphic, electronic, or mechanical, including photocopying, recording, taping, or storage in an electronic retrieval system-without prior written permission of the copyright owner.

Software derived from copyrighted NetApp material is subject to the following license and disclaimer:

THIS SOFTWARE IS PROVIDED BY NETAPP “AS IS” AND WITHOUT ANY EXPRESS OR IMPLIED WARRANTIES, INCLUDING, BUT NOT LIMITED TO, THE IMPLIED WARRANTIES OF MERCHANTABILITY AND FITNESS FOR A PARTICULAR PURPOSE, WHICH ARE HEREBY DISCLAIMED. IN NO EVENT SHALL NETAPP BE LIABLE FOR ANY DIRECT, INDIRECT, INCIDENTAL, SPECIAL, EXEMPLARY, OR CONSEQUENTIAL DAMAGES (INCLUDING, BUT NOT LIMITED TO, PROCUREMENT OF SUBSTITUTE GOODS OR SERVICES; LOSS OF USE, DATA, OR PROFITS; OR BUSINESS INTERRUPTION) HOWEVER CAUSED AND ON ANY THEORY OF LIABILITY, WHETHER IN CONTRACT, STRICT LIABILITY, OR TORT (INCLUDING NEGLIGENCE OR OTHERWISE) ARISING IN ANY WAY OUT OF THE USE OF THIS SOFTWARE, EVEN IF ADVISED OF THE POSSIBILITY OF SUCH DAMAGE.

NetApp reserves the right to change any products described herein at any time, and without notice. NetApp assumes no responsibility or liability arising from the use of products described herein, except as expressly agreed to in writing by NetApp. The use or purchase of this product does not convey a license under any patent rights, trademark rights, or any other intellectual property rights of NetApp.

The product described in this manual may be protected by one or more U.S. patents, foreign patents, or pending applications.

RESTRICTED RIGHTS LEGEND: Use, duplication, or disclosure by the government is subject to restrictions as set forth in subparagraph (c)(1)(ii) of the Rights in Technical Data and Computer Software clause at DFARS 252.277-7103 (October 1988) and FAR 52-227-19 (June 1987).

Trademark Information

NETAPP, the NETAPP logo, and the marks listed at http://www.netapp.com/TM are trademarks of NetApp, Inc. Other company and product names may be trademarks of their respective owners.