Network configuration

HCI

NetApp
June 14, 2022

This PDF was generated from https://docs.netapp.com/us-en/hci19/docs/hci_prereqs_network_configuration.html on June 14, 2022. Always check docs.netapp.com for the latest.

Table of Contents

Network configuration . . . 1
Network configuration . . . 1
Network configuration . . . 2
Network configuration . . . 5
Network configuration . . . 6

Network configuration

Network configuration

NetApp HCI can utilize multiple different network cabling and VLAN configurations. It is important to plan your network configuration to ensure a successful deployment.

Required network segments

NetApp HCI requires a minimum of three network segments: management, storage, and virtualization traffic (which includes virtual machines and VMware vMotion traffic). You can also separate virtual machine and vMotion traffic. These network segments usually exist as logically separated VLANs in the NetApp HCI network infrastructure.

How compute and storage nodes connect to these networks depends on how you design the network and cable the nodes. The sample network illustrations in this guide assume the following networks:

Network name	VLAN ID
Management	100
Storage	105
vMotion	107
Virtual machines	200, 201

For automatic discovery and configuration of your NetApp HCI nodes in the NetApp Deployment Engine, you must have a network segment that is available as an untagged or native VLAN on all switch ports that are used for the SFP+/SFP28 interfaces on the nodes. This will provide layer 2 communication between all nodes for discovery and deployment. Without a native VLAN, you must configure the SFP+/SFP28 interfaces of all nodes manually with a VLAN and IPv4 address to be discoverable. In the network configuration examples in this document, the management network (VLAN ID 100) is used for this purpose.

The NetApp Deployment Engine enables you to quickly configure networks for compute and storage nodes during the initial deployment. You can place certain built-in management components such as vCenter and the management node on their own network segment. These network segments require routing to allow vCenter and the management node to communicate with storage and compute management networks. In most deployments those components use the same management network (VLAN ID 100 in this example).

> You configure virtual machine networks using vCenter. The default virtual machine network (port group "VM_Network") in NetApp HCI deployments is configured without a VLAN ID. If you plan to use multiple tagged virtual machine networks (VLAN IDs 200 and 201 in the preceding example), ensure you include them in the initial network planning.

Network configuration and cabling options

You can use a two-cable network configuration for the H410C compute nodes, simplifying cable routing. This configuration uses two SFP+/SFP28 interfaces plus an optional (but recommended) RJ45 interface for IPMI communication. These nodes can also use a six-cable configuration with two RJ45 and four SFP28/SFP+ interfaces.

The H410S and H610S storage nodes support a network topology that uses four network ports (ports A

through D).

Compute nodes support three network topologies, depending on the hardware platform:

Configuration option	Cabling for H410C nodes	Cabling for H610C nodes	Cabling for H615C nodes
Option A	Two cables using ports D and E	Two cables using ports C and D	Two cables using ports A and B
Option B	Six cables using ports A through F	Not available	Not available
Option C	Similar to option B, but with native VLANs (or "access ports") on the switch for the management, storage, and vMotion networks		

Nodes that do not have the correct number of connected cables cannot participate in the deployment. For example, you cannot deploy a compute node in a six-cable configuration if it only has ports D and E connected.

> You can adjust the NetApp HCI network configuration after deployment to meet infrastructure needs. However, when you expand NetApp HCI resources, remember that new nodes must have the same cable configuration as the existing compute and storage nodes.

> If the NetApp Deployment Engine fails because your network does not support jumbo frames, you can perform one of the following workarounds:
>
> - Use a static IP address and manually set a maximum transmission unit (MTU) of 9000 bytes on the Bond10G network.
> - Configure the Dynamic Host Configuration Protocol to advertise an interface MTU of 9000 bytes on the Bond10G network.

Network configuration options

- Network configuration option A
- Network configuration option B
- Network configuration option C

Find more information

- NetApp HCI Resources page
- NetApp Element Plug-in for vCenter Server

Network configuration

NetApp HCI can utilize multiple different network cabling and VLAN configurations. The first configuration, option A, uses two network cables for each compute node.

Configuration option A: Two cables for compute nodes

The NetApp H410C, H610C, and H615C compute nodes support using two network cables for connectivity to all NetApp HCI networks. This configuration requires that the storage, vMotion and any virtual machine

networks use VLAN tagging. All compute and storage nodes must use the same VLAN ID scheme. This configuration uses vSphere Distributed Switches that require VMware vSphere Enterprise Plus licensing.

NetApp HCI documentation uses letters to refer to network ports on the back panel of H-series nodes.

Here are the network ports and locations on the H410C storage node:

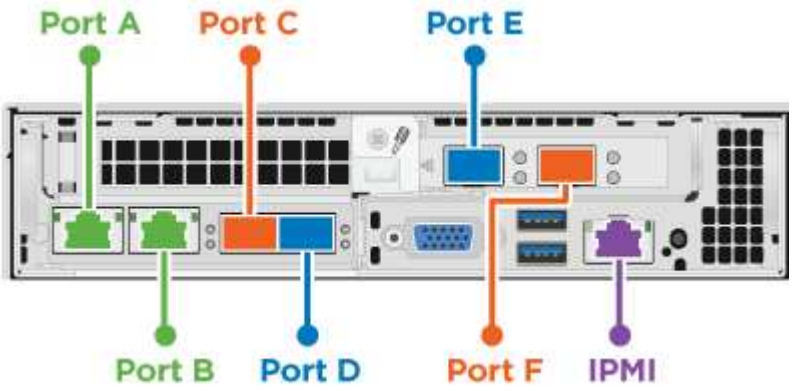

Here are the network ports and locations on the H610C compute node:

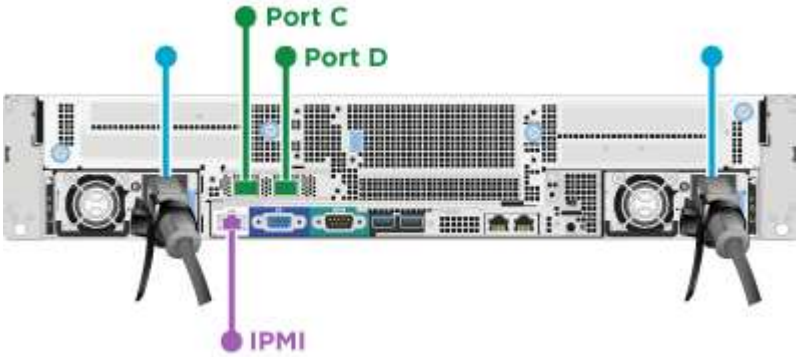

Here are the network ports and locations on the H615C compute node:

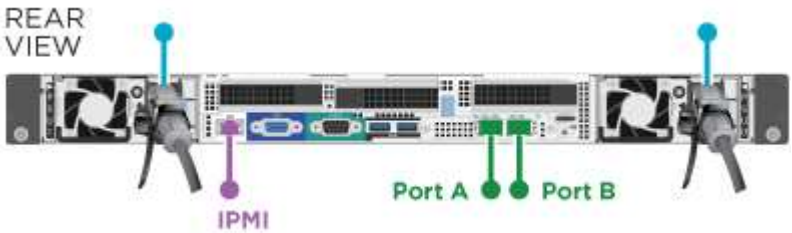

This configuration uses the following network ports on each node:

Node	Network ports used
H410C	D and E
H610C	C and D
H615C	A and B

VLAN configuration

As a best practice, you should configure the required network segments on all switch ports that the nodes are using. For example:

Network name	VLAN ID	Switch port configuration
Management	100	Native
Storage	105	Tagged
vMotion	107	Tagged
Virtual machines	200, 201	Tagged

The following illustration shows the recommended cabling configuration for two-cable H410C compute nodes and four-cable H410S storage nodes. All switch ports in this example share the same configuration.

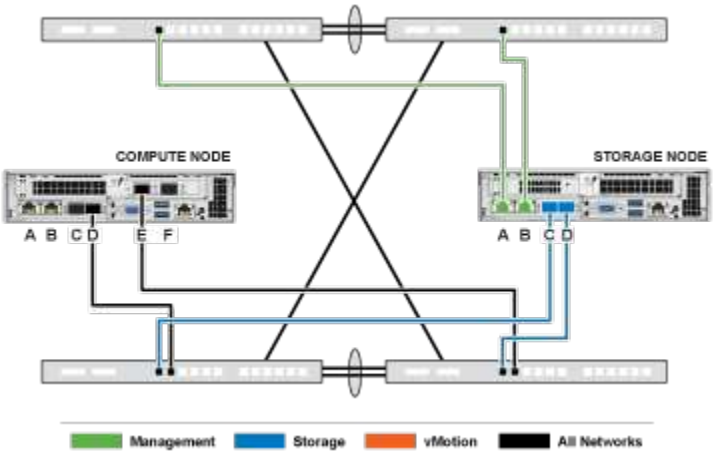

Example switch commands

You can use the following example commands to configure all switch ports used for NetApp HCI nodes. These commands are based on a Cisco configuration, but might require only small changes to apply to Mellanox switches. See your switch documentation for the specific commands you need to implement this configuration. Replace the interface name, description, and VLANs with the values for your environment.

```
interface {interface name, such as EthernetX/Y or GigabitEthernetX/Y/Z}
description {desired description, such as NetApp-HCI-NodeX-PortY}
mtu 9216
switchport mode trunk
switchport trunk native vlan 100
switchport trunk allowed vlan 105,107,200,201
spanning-tree port type edge trunk
```

> Some switches might require inclusion of the native VLAN in the allowed VLAN list. See the documentation for your specific switch model and software version.

Find more information

- NetApp HCI Resources page
- NetApp Element Plug-in for vCenter Server

Network configuration

NetApp HCI can utilize multiple different network cabling and VLAN configurations. The first configuration, option B, uses six network cables for each compute node.

Configuration option B: Six cables for compute nodes

As a secondary network configuration option, the H410C compute nodes support using six network cables for connectivity to all NetApp HCI networks. This configuration requires that the storage, vMotion and any virtual machine networks use VLAN tagging. You can use this configuration with vSphere Standard Switches or vSphere Distributed Switches (which require VMware vSphere Enterprise Plus licensing).

NetApp HCI documentation uses letters to refer to network ports on the back panel of H-series nodes.

Here are the network ports and locations on the H410C compute node:

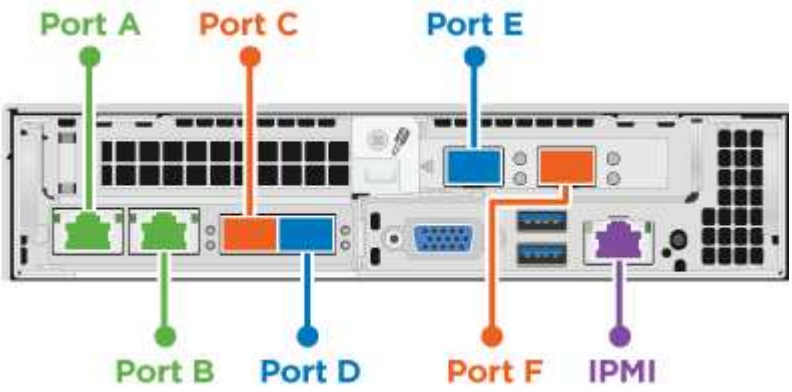

VLAN configuration

When you deploy compute nodes using six cables and storage nodes using four cables, as a best practice, you should configure the required network segments on all switch ports that the nodes are using. For example:

Network name	VLAN ID	Switch port configuration
Management	100	Native
Storage	105	Tagged
vMotion	107	Tagged
Virtual machines	200, 201	Tagged

The following illustration shows the recommended cabling configuration for six-cable compute nodes and four-cable storage nodes. All switch ports in this example share the same configuration.

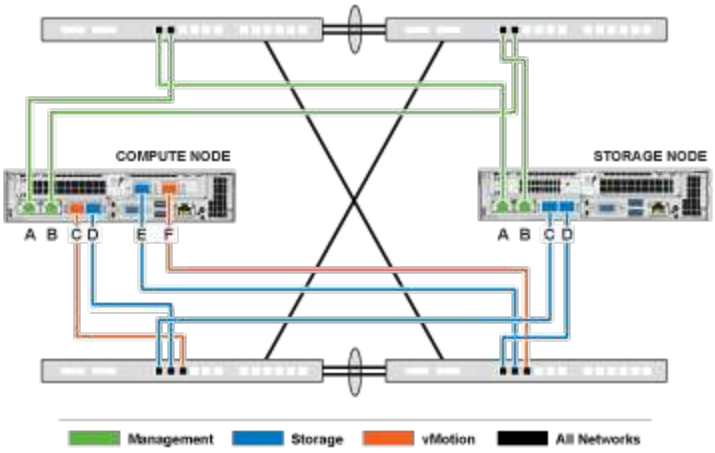

Example switch commands

You can use the following example commands to configure all switch ports used for NetApp HCI nodes. These commands are based on a Cisco configuration, but might require only small changes to apply to Mellanox switches. See your switch documentation for the specific commands you need to implement this configuration. Replace the interface name, description, and VLANs with the values for your environment.

```
interface {interface name, such as EthernetX/Y or GigabitEthernetX/Y/Z}
description {desired description, such as NetApp-HCI-NodeX-PortY}
mtu 9216
switchport mode trunk
switchport trunk native vlan 100
switchport trunk allowed vlan 105,107,200,201
spanning-tree port type edge trunk
```

> Some switches might require inclusion of the native VLAN in the allowed VLAN list. See the documentation for your specific switch model and software version.

Find more information

- NetApp HCI Resources page
- NetApp Element Plug-in for vCenter Server

Network configuration

NetApp HCI can utilize multiple different network cabling and VLAN configurations. The third configuration, option C, uses six network cables for each compute node with native VLANs.

Configuration option C: Six cables for compute nodes with native VLANs

You can deploy NetApp HCI without using tagged VLANs for storage and virtualization traffic, and instead rely on the switch configuration to separate the network segments. You can use this configuration with vSphere Standard Switches or vSphere Distributed Switches (which require VMware vSphere Enterprise Plus licensing).

NetApp HCI documentation uses letters to refer to network ports on the back panel of H-series nodes.

Here are the network ports and locations on the H410C storage node:

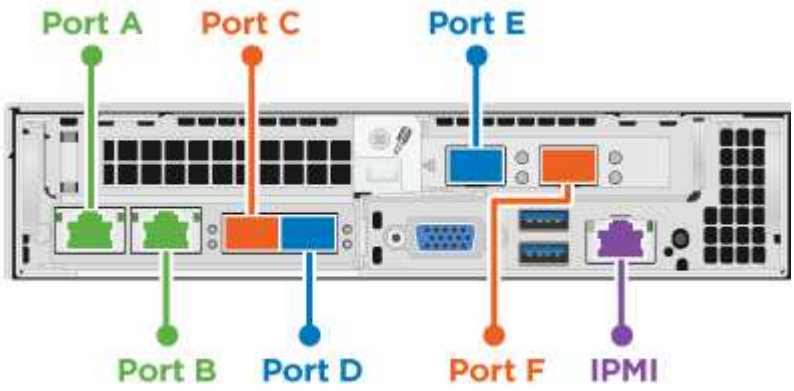

Here are the network ports and locations on the H410S storage node:

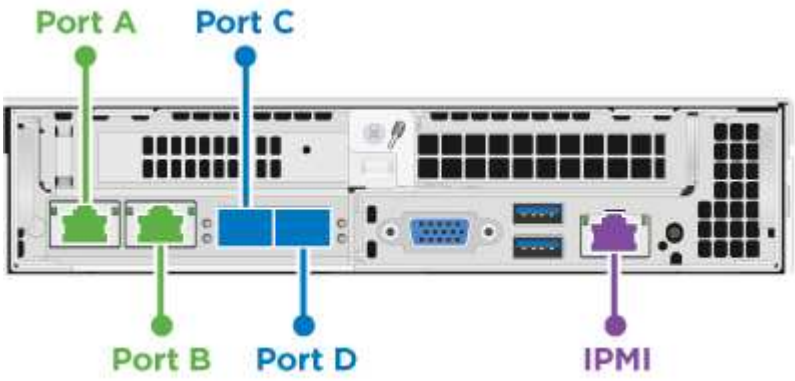

Here are the network ports and locations on the H610S storage node:

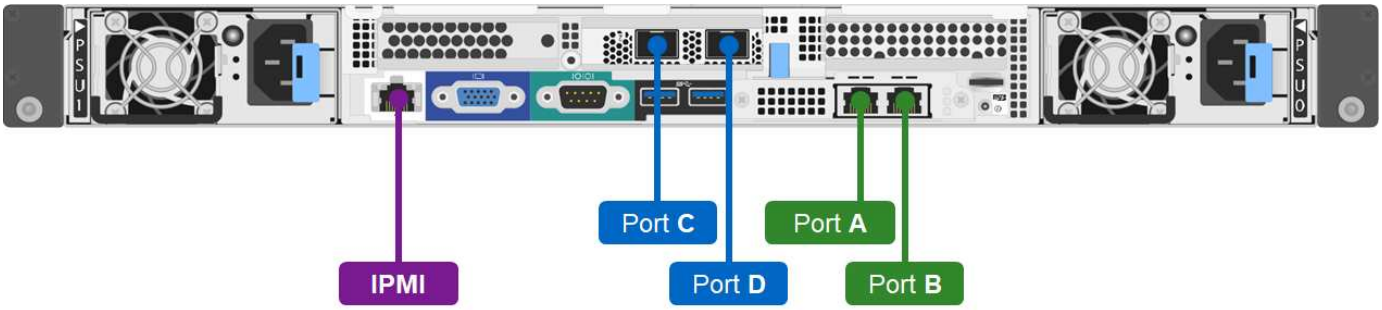

VLAN configuration for H410C, H410S, and H610S nodes

This topology option uses the following VLAN configuration on H410C, H410S, and H610S nodes:

Node ports used	Network name	VLAN ID	Connected switch port configuration
Ports A and B on compute and storage nodes	Management	100	Native
Ports D and E on compute nodes	Storage	105	Native

Node ports used	Network name	VLAN ID	Connected switch port configuration
Ports C and D on storage nodes	Storage	105	Native
Ports C and F on compute nodes	vMotion	107	Native
Ports C and F on compute nodes	Virtual machines	200, 201	Tagged

Be careful configuring the switch ports when deploying this configuration. Configuration errors in this network topology can result in deployment problems that are difficult to diagnose.

The following illustration shows the network configuration overview for this topology option. In the example, individual switch ports are configured with the appropriate network segment as the native network.

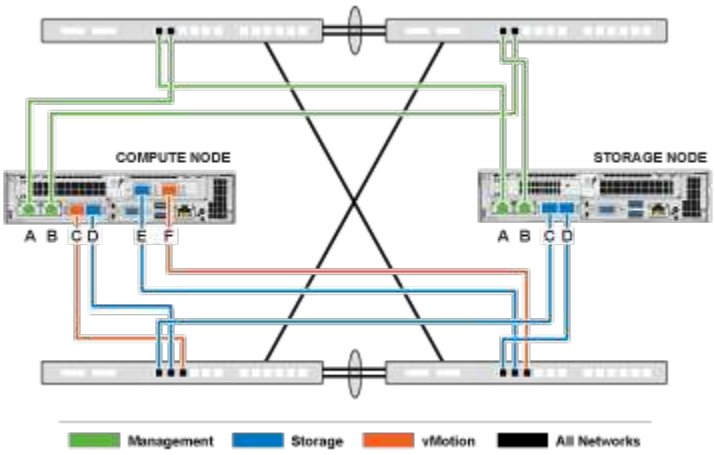

Example switch commands

You can use the following example switch commands to configure switch ports used for the NetApp HCI nodes. These commands are based on a Cisco configuration, but might require only minimal changes to apply to Mellanox switches. See your switch documentation for the specific commands you need to implement this configuration.

You can use the following example commands to configure the switch ports used for the management network. Replace the interface name, description, and VLANs with the values for your configuration.

```
interface {interface name, such as EthernetX/Y or GigabitEthernetX/Y/Z}
description {desired description, such as NetApp-HCI-NodeX-PortA|B}
switchport access vlan 100
spanning-tree port type edge
```

You can use the following example commands to configure the switch ports used for the storage network. Replace the interface name, description, and VLANs with the values for your configuration.

```
interface {interface name, such as EthernetX/Y or GigabitEthernetX/Y/Z}
description {desired description, such as NetApp-HCI-NodeX-PortC|D}
mtu 9216
switchport access vlan 105
```

```
spanning-tree port type edge
```

You can use the following example commands to configure the switch ports used for the vMotion and virtual machines network. Replace the interface name, description, and VLANs with the values for your configuration.

```
interface {interface name, such as EthernetX/Y or GigabitEthernetX/Y/Z}
description {desired description, such as NetApp-HCI-NodeX-PortC|F}
mtu 9216
switchport mode trunk
switchport trunk native vlan 107
switchport trunk allowed vlan 200,201
spanning-tree port type edge trunk
```

> Some switches might require inclusion of the native VLAN in the allowed VLAN list. See the documentation for your specific switch model and software version.

Find more information

- NetApp HCI Resources page
- NetApp Element Plug-in for vCenter Server

Copyright Information

Copyright © 2022 NetApp, Inc. All rights reserved. Printed in the U.S. No part of this document covered by copyright may be reproduced in any form or by any means-graphic, electronic, or mechanical, including photocopying, recording, taping, or storage in an electronic retrieval system-without prior written permission of the copyright owner.

Software derived from copyrighted NetApp material is subject to the following license and disclaimer:

THIS SOFTWARE IS PROVIDED BY NETAPP “AS IS” AND WITHOUT ANY EXPRESS OR IMPLIED WARRANTIES, INCLUDING, BUT NOT LIMITED TO, THE IMPLIED WARRANTIES OF MERCHANTABILITY AND FITNESS FOR A PARTICULAR PURPOSE, WHICH ARE HEREBY DISCLAIMED. IN NO EVENT SHALL NETAPP BE LIABLE FOR ANY DIRECT, INDIRECT, INCIDENTAL, SPECIAL, EXEMPLARY, OR CONSEQUENTIAL DAMAGES (INCLUDING, BUT NOT LIMITED TO, PROCUREMENT OF SUBSTITUTE GOODS OR SERVICES; LOSS OF USE, DATA, OR PROFITS; OR BUSINESS INTERRUPTION) HOWEVER CAUSED AND ON ANY THEORY OF LIABILITY, WHETHER IN CONTRACT, STRICT LIABILITY, OR TORT (INCLUDING NEGLIGENCE OR OTHERWISE) ARISING IN ANY WAY OUT OF THE USE OF THIS SOFTWARE, EVEN IF ADVISED OF THE POSSIBILITY OF SUCH DAMAGE.

NetApp reserves the right to change any products described herein at any time, and without notice. NetApp assumes no responsibility or liability arising from the use of products described herein, except as expressly agreed to in writing by NetApp. The use or purchase of this product does not convey a license under any patent rights, trademark rights, or any other intellectual property rights of NetApp.

The product described in this manual may be protected by one or more U.S. patents, foreign patents, or pending applications.

RESTRICTED RIGHTS LEGEND: Use, duplication, or disclosure by the government is subject to restrictions as set forth in subparagraph (c)(1)(ii) of the Rights in Technical Data and Computer Software clause at DFARS 252.277-7103 (October 1988) and FAR 52-227-19 (June 1987).

Trademark Information

NETAPP, the NETAPP logo, and the marks listed at http://www.netapp.com/TM are trademarks of NetApp, Inc. Other company and product names may be trademarks of their respective owners.