NetApp Cloud Volumes, Not Your Mothers File Service

Hybrid Cloud Solutions

Karthik Chinnathambi
June 25, 2018

This PDF was generated from https://docs.netapp.com/us-en/hybridcloudsolutions/cloud_volumes_service/snapshot_cloud_volumes.html on December 09, 2020. Always check docs.netapp.com for the latest.

Table of Contents

NetApp Cloud Volumes, Not Your Mothers File Service 1

NetApp Cloud Volumes, Not Your Mothers File Service

Durability, Availability, Encryption and Snapshots

Authors: Chad Morgenstern, Karthik Chinnathambi

If you are thinking about your data in the clouds, consider that NetApp Cloud Volumes Service is about more than just NFS or SMB. With the Cloud Volumes Service, you can rest assured that your data is durable, encrypted, and highly available. But what about protection from user errors, wouldn't you love the ability to roll back time to undo choices you may have made and wish you hadn't? Yeah, we got you covered there too with NetApp Cloud Volume Service's Snapshot capability.

Durability

Your data is protected not just against multiple drive failures, but against numerous type of disk errors that could otherwise affect not just your data durability but your data integrity as well. No more worries that your data is going to disappear.

Encryption

Regarding encryption, NetApp Cloud Volume service utilizes Storage Encryption to provide full-disk encryption without compromising storage application performance. This single-source solution can increase overall compliance with industry and government regulations without compromising your user experience.

Availability

The Cloud Volumes Service is built upon best of industry, proven rock-solid enterprise class hardware and software all but ensuring uptime – availability. Each storage node has many paths to its own Solid State Drives protecting against path failure as well as access to a partner storage node SSDs as well. As each storage node has access to its partners disks, continued productivity in the event of controller failure is ensured. You are protected against network failures by redundant network ports and paths all the way up the stack across the cloud connections.

As NetApp Cloud Volume Service for AWS sits centrally in relation to each of the availability zones within an AWS region, the service is immune to availability zone outages. Access your data from any availability zone without the need to replicate content – the user experience from AZ to AZ is expected to be the same and if not, well, its outside of our control – clouds will be clouds after all.

The Undo Button

Snapshots act as logical backups and are as such point-in-time representations of your data. The creation of Snapshots may be scheduled or taken manually both within the Cloud Volumes Portal.

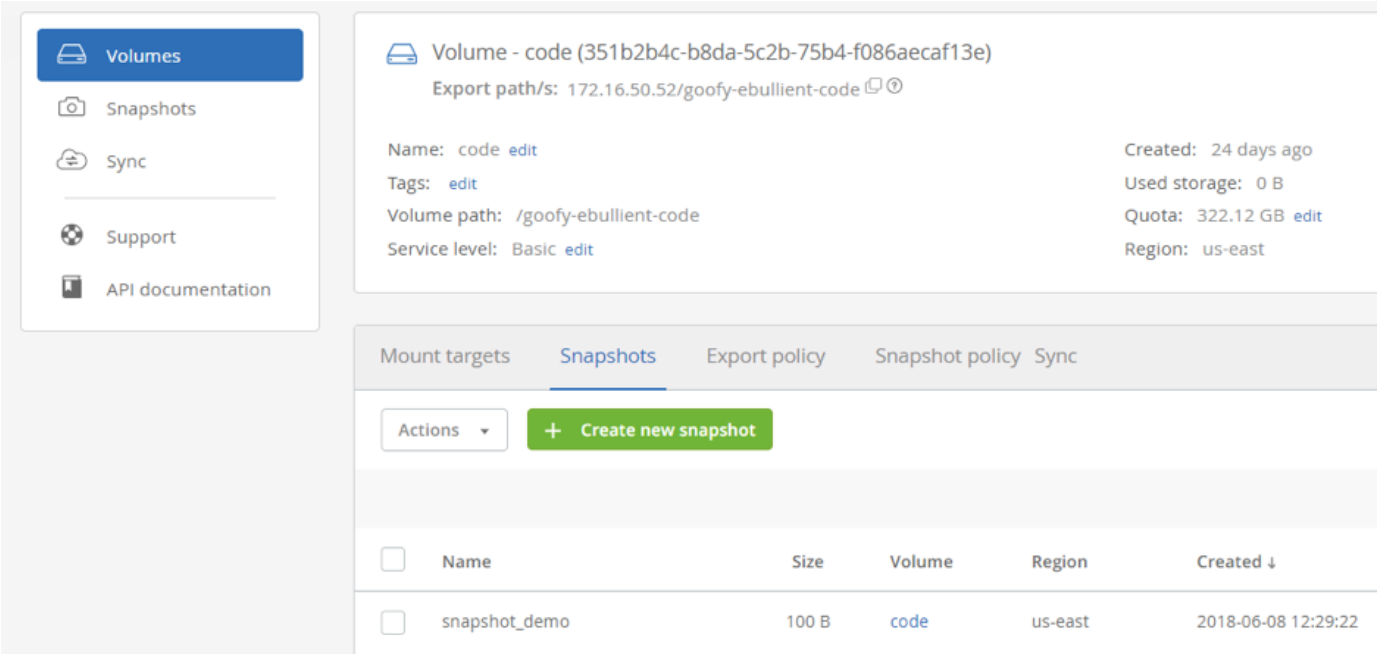

The Cloud Volume Service is evolving rapidly and as such I can tell you that API support for Snapshot creation is coming.

NetApp Cloud Volume Snapshots are fast, plentiful and non-disruptive. A NetApp Snapshot simply manipulates block pointers, creating a “frozen” read-only view of a volume that lets applications access older versions of files and directory hierarchies without special programming. Because the actual data blocks aren’t copied, Snapshot copies are extremely efficient both in the time needed to create them and in storage space. A Cloud Volume Snapshot copy takes only a few seconds to create—typically less than one second, regardless of the size of the volume or the level of activity within the environment.

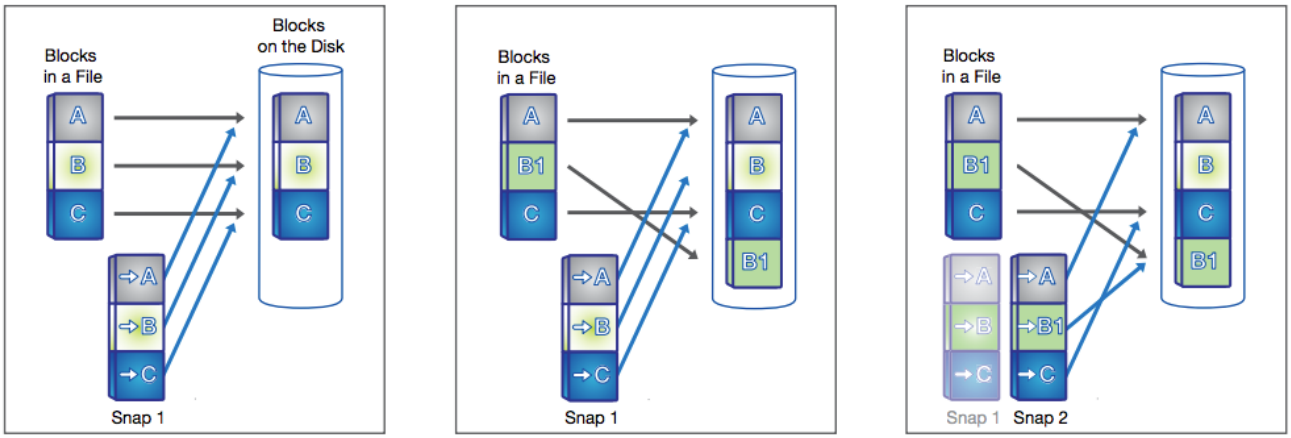

Figure 1a Figure 1b Figure 1c

A snapshot is taken in 1a. In 1b, changed data is written to a new block and the pointer is updated, but the snapshot pointer still points to the old block, giving you a live view of the data and an historical view. Another snapshot is taken in 1c and you now have access to 3 generations of your data without taking up the disk space that 3 unique copies would require; live, snapshot 2 and snapshot 1 in order of age.

A NetApp Cloud Volume Snapshot copy incurs no performance overhead; users can comfortably store up to 255 Snapshot copies per volume, all of which are accessible as read-only and online versions of the data. Read-only via the ".snapshot" directory located at the root of the filesystem and online from a cloned volume today and in-place restore in the near future. So what about user experience when working with the cloned volume? Because of the pointer system, use of the cloned volume should provide a comparable experience to the use of the parent volume itself.

NetApp Snapshot comparison

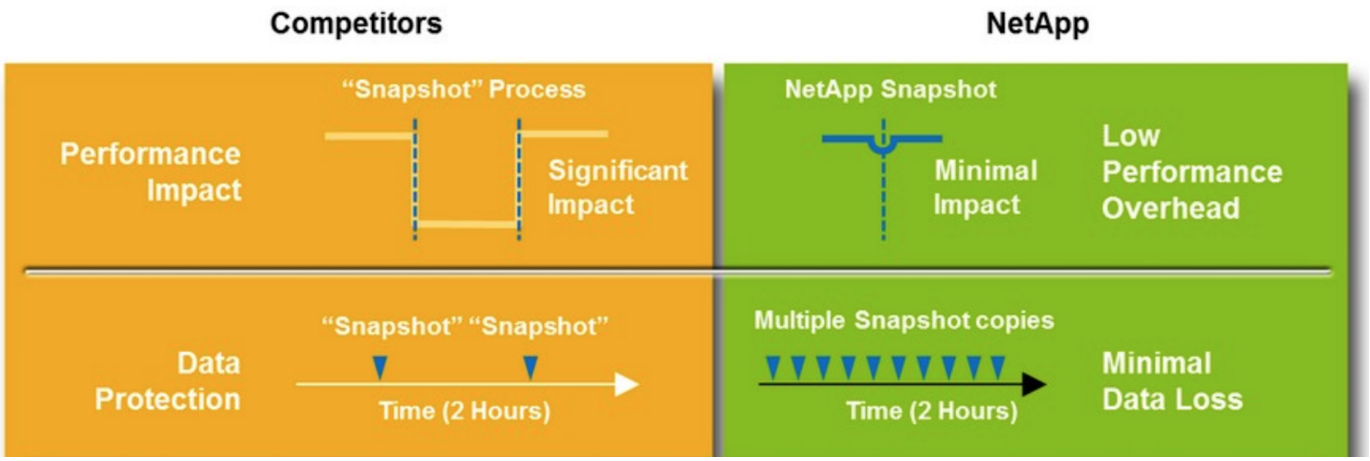

About NetApp

NetApp is the data authority for hybrid cloud. We provide a full range of hybrid cloud data services that simplify management of data across cloud and on-premises environments to accelerate digital transformation. We empower global organizations to unleash the full potential of their data to expand customer touchpoints, foster greater innovation and optimize operations. For more information, visit: www.netapp.com #DataDriven

Copyright Information

Copyright © 2020 NetApp, Inc. All rights reserved. Printed in the U.S. No part of this document covered by copyright may be reproduced in any form or by any means-graphic, electronic, or mechanical, including photocopying, recording, taping, or storage in an electronic retrieval system-without prior written permission of the copyright owner.

Software derived from copyrighted NetApp material is subject to the following license and disclaimer:

THIS SOFTWARE IS PROVIDED BY NETAPP “AS IS” AND WITHOUT ANY EXPRESS OR IMPLIED WARRANTIES, INCLUDING, BUT NOT LIMITED TO, THE IMPLIED WARRANTIES OF MERCHANTABILITY AND FITNESS FOR A PARTICULAR PURPOSE, WHICH ARE HEREBY DISCLAIMED. IN NO EVENT SHALL NETAPP BE LIABLE FOR ANY DIRECT, INDIRECT, INCIDENTAL, SPECIAL, EXEMPLARY, OR CONSEQUENTIAL DAMAGES (INCLUDING, BUT NOT LIMITED TO, PROCUREMENT OF SUBSTITUTE GOODS OR SERVICES; LOSS OF USE, DATA, OR PROFITS; OR BUSINESS INTERRUPTION) HOWEVER CAUSED AND ON ANY THEORY OF LIABILITY, WHETHER IN CONTRACT, STRICT LIABILITY, OR TORT (INCLUDING NEGLIGENCE OR OTHERWISE) ARISING IN ANY WAY OUT OF THE USE OF THIS SOFTWARE, EVEN IF ADVISED OF THE POSSIBILITY OF SUCH DAMAGE.

NetApp reserves the right to change any products described herein at any time, and without notice. NetApp assumes no responsibility or liability arising from the use of products described herein, except as expressly agreed to in writing by NetApp. The use or purchase of this product does not convey a license under any patent rights, trademark rights, or any other intellectual property rights of NetApp.

The product described in this manual may be protected by one or more U.S. patents, foreign patents, or pending applications.

RESTRICTED RIGHTS LEGEND: Use, duplication, or disclosure by the government is subject to restrictions as set forth in subparagraph (c)(1)(ii) of the Rights in Technical Data and Computer Software clause at DFARS 252.277-7103 (October 1988) and FAR 52-227-19 (June 1987).

Trademark Information

NETAPP, the NETAPP logo, and the marks listed at http://www.netapp.com/TM are trademarks of NetApp, Inc. Other company and product names may be trademarks of their respective owners.