Cloud Volumes Service

Hybrid Cloud Solutions

NetApp
May 31, 2021

This PDF was generated from https://docs.netapp.com/us-en/hybridcloudsolutions/cloud_volumes_service/snapshot_cloud_volumes.html on May 31, 2021. Always check docs.netapp.com for the latest.

Table of Contents

Cloud Volumes Service 1
Blogs 1

Cloud Volumes Service

Blogs

NetApp Cloud Volumes, Not Your Mothers File Service

Durability, Availability, Encryption and Snapshots

Authors: Chad Morgenstern, Karthik Chinnathambi

If you are thinking about your data in the clouds, consider that NetApp Cloud Volumes Service is about more than just NFS or SMB. With the Cloud Volumes Service, you can rest assured that your data is durable, encrypted, and highly available. But what about protection from user errors, wouldn't you love the ability to roll back time to undo choices you may have made and wish you hadn't? Yeah, we got you covered there too with NetApp Cloud Volume Service's Snapshot capability.

Durability

Your data is protected not just against multiple drive failures, but against numerous type of disk errors that could otherwise affect not just your data durability but your data integrity as well. No more worries that your data is going to disappear.

Encryption

Regarding encryption, NetApp Cloud Volume service utilizes Storage Encryption to provide full-disk encryption without compromising storage application performance. This single-source solution can increase overall compliance with industry and government regulations without compromising your user experience.

Availability

The Cloud Volumes Service is built upon best of industry, proven rock-solid enterprise class hardware and software all but ensuring uptime – availability. Each storage node has many paths to its own Solid State Drives protecting against path failure as well as access to a partner storage node SSDs as well. As each storage node has access to its partners disks, continued productivity in the event of controller failure is ensured. You are protected against network failures by redundant network ports and paths all the way up the stack across the cloud connections.

As NetApp Cloud Volume Service for AWS sits centrally in relation to each of the availability zones within an AWS region, the service is immune to availability zone outages. Access your data from any availability zone without the need to replicate content – the user experience from AZ to AZ is expected to be the same and if not, well, its outside of our control – clouds will be clouds after all.

The Undo Button

Snapshots act as logical backups and are as such point-in-time representations of your data. The creation of Snapshots may be scheduled or taken manually both within the Cloud Volumes Portal.

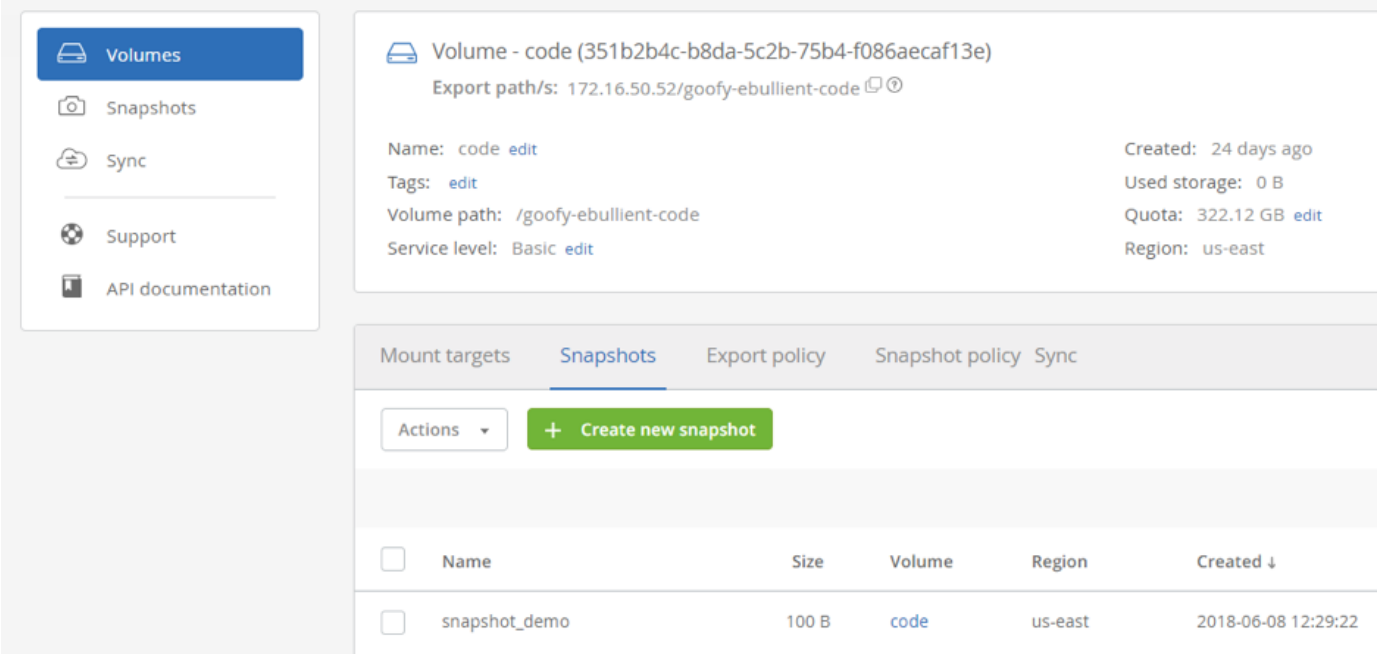

The Cloud Volume Service is evolving rapidly and as such I can tell you that API support for Snapshot creation is coming.

NetApp Cloud Volume Snapshots are fast, plentiful and non-disruptive. A NetApp Snapshot simply manipulates block pointers, creating a “frozen” read-only view of a volume that lets applications access older versions of files and directory hierarchies without special programming. Because the actual data blocks aren’t copied, Snapshot copies are extremely efficient both in the time needed to create them and in storage space. A Cloud Volume Snapshot copy takes only a few seconds to create—typically less than one second, regardless of the size of the volume or the level of activity within the environment.

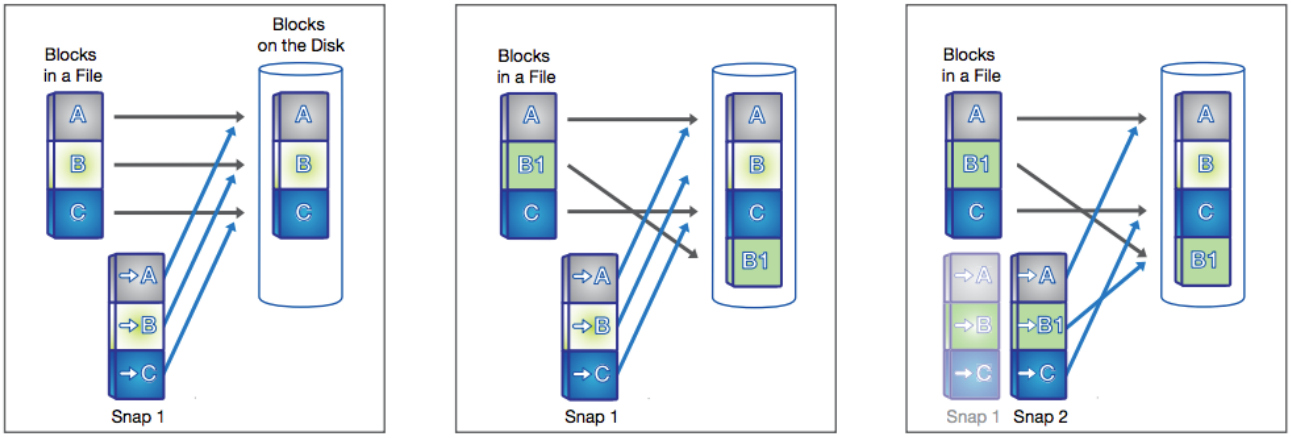

Figure 1a Figure 1b Figure 1c

A snapshot is taken in 1a. In 1b, changed data is written to a new block and the pointer is updated, but the snapshot pointer still points to the old block, giving you a live view of the data and an historical view. Another snapshot is taken in 1c and you now have access to 3 generations of your data without taking up the disk space that 3 unique copies would require; live, snapshot 2 and snapshot 1 in order of age.

A NetApp Cloud Volume Snapshot copy incurs no performance overhead; users can comfortably store up to 255 Snapshot copies per volume, all of which are accessible as read-only and online versions of the data. Read-only via the ".snapshot" directory located at the root of the filesystem and online from a cloned volume today and in-place restore in the near future. So what about user experience when working with the cloned volume? Because of the pointer system, use of the cloned volume should provide a comparable experience to the use of the parent volume itself.

NetApp Snapshot comparison

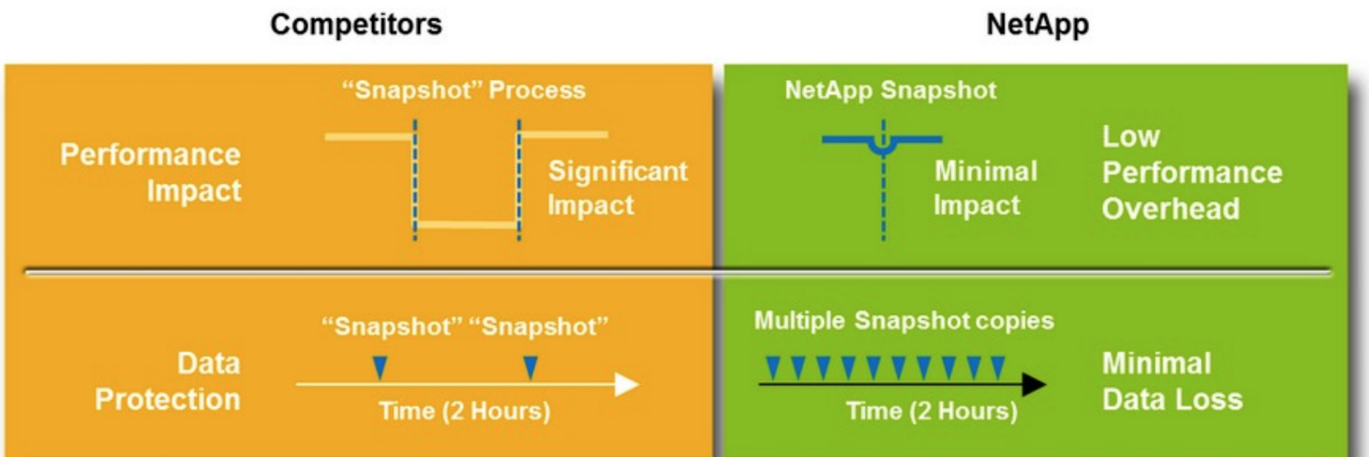

About NetApp

NetApp is the data authority for hybrid cloud. We provide a full range of hybrid cloud data services that simplify management of data across cloud and on-premises environments to accelerate digital transformation. We empower global organizations to unleash the full potential of their data to expand customer touchpoints, foster greater innovation and optimize operations. For more information, visit: www.netapp.com #DataDriven

Oracle in the Clouds

NetApp Cloud Volumes Service For AWS

A review of Oracle performance as it pertains to the NetApp Cloud Volumes Service in AWS.

Authors: Ali Aiello, Joe Carter, Chad Morgenstern

If you are thinking about your data in the clouds, consider that the NetApp Cloud Volumes Service is about more than just NFS or SMB. With the NetApp Cloud Volumes Service, you can rest assured that your data is durable, encrypted, highly available and performant.

Please see the blog NetApp Cloud Volumes, Not Your Mothers File Service for details regarding how NetApp Cloud Volumes approaches durability, encryption, and availability as well as some really nice details regarding the Cloud Volumes snapshot technology.

The remainder of blog focuses on Oracle performance. Oracle is especially well suited for inclusion in the NetApp Cloud Volumes Service. Beyond the fact that your data is protected by 8 nines of durability and is accessible across all the availability zones within a given region, Oracle's Direct NFS client seems almost purpose built for Amazon's AWS architecture. More on that later.

Performance

When performing evaluations of database workloads, always keep in mind the impact of server memory. Ideally queries find their data resident therein as latency from memory is always going to be orders of magnitude lower than any "disk" query. What does this mean for you? While storage latency matters, memory hit percentage matters more. When database administrators say that they need a latency of X, keep in mind what they are talking about.

With that said…

The Oracle Direct NFS client spawns many network sessions to each NetApp Cloud volume, doing so as load demands. The vast number of network sessions brings the potential for a significant amount of throughput for the database. Far greater than a single network session can provide in AWS.

To test Oracle's ability to generate load, NetApp ran a series of proofs of concept across various EC2 instance types, with various workload mixtures and volume counts. The SLOB2 workload generator drove the workload against a single Oracle 12.2c database. Keep in mind that at present AWS has no support for Oracle RAC, so single node testing was our only option.

The testing showed that the while any instance size is fine - run an instance size according to your need - Oracle and NetApp Cloud Volumes can consume the resources of even the largest instance. Towards that end, the graphics below focus on the c5.18xlarge instance type.

Workload : 100% Update

Amazon AWS imposes an architectural egress limit of 5Gbps for all I/O leaving the VPC. This limit defines the lower threshold in the graphic below, as seen in the 100% update workload represented by the green lines below. This workload amounts to 50% read and 50% write, the writes being the limiting factor. Though the two-volume test resulted in slightly lower application latency compared to the one-volume test, both volume counts converge at the same point the VPC egress limit which worked out to be just around 130,000 Oracle IOPS.

Workload : 100% Read

The 100% read workload represents the upper limit for the Oracle Database running against the NetApp Cloud Volumes Service in AWS. The pure read workload scenario, as shown by the red lines, is limited only by the instance type and the amount of network and CPU resources available to the instance. Just as the 100% update workload discussed above, though the two-volume configuration resulted in lower application latency, the tested configurations converged at the instance resource limit. In this case just shy of 300,000 Oracle IOPS.

Workload : 75% Read 25% Update

The third workload, shown in purple, is a 75% Oracle read and 25% Oracle update or read-modify-write workload. This scenario performed exceptionally well be it with one or two volumes, though the two-volume scenario outperformed the other. Many database administrators prefer the simplicity of a single volume database, 200,000 IOPS ought to satisfy all but the most demanding of database needs and doing so with the simple layout desired by these dba's. For those needing more, additional volumes will enable greater throughput as shown below.

Figure 1: Oracle SLOB Test Graphic

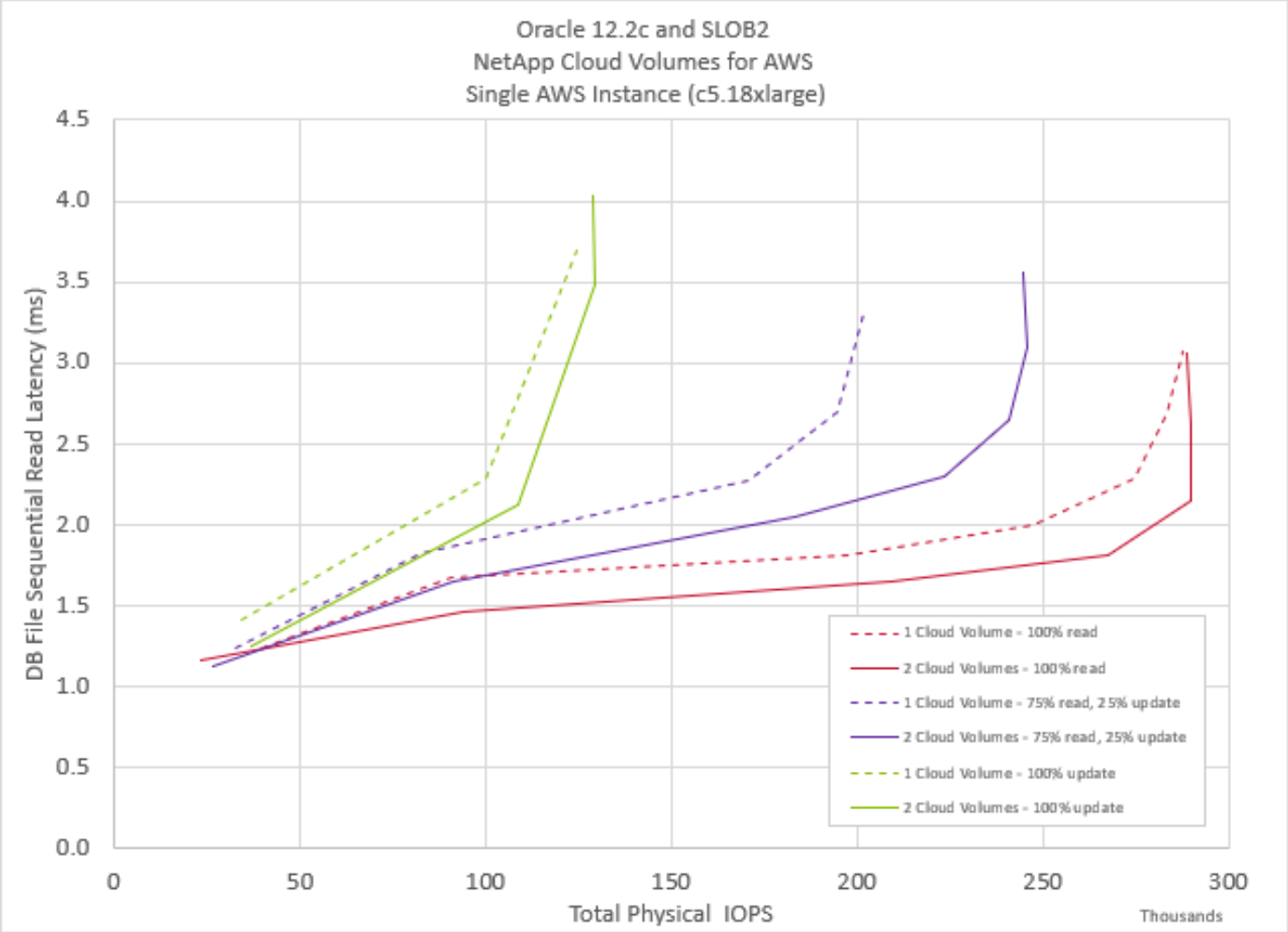

Best Practices

- init.ora file
  - db_file_multiblock_read_countr
  - remove this option if present
- Redo block size:
  - Set to either 512 or 4KB, in general leave as default 512, unless recommended otherwise by App or Oracle.
  - If redo rates are greater than 50MBps, consider testing a 4KB block size
- Network considerations
  - Enable TCP timestamps, selective acknowledgement (SACK), and TCP window scaling on hosts
- Slot tables
  - sunrpc.tcp_slot_table_entries = 128
  - sunrpc.tcp_max_slot_table_entries = 65536
- Mount options

File Type	Mount Options

ADR_home	rw,bg,hard,vers=3,proto=tcp,timeo=600,rsize=65536, wsize=65536
Oracle Home	rw,bg,hard,vers=3,proto=tcp,timeo=600,rsize=65536, wsize=65536,nointr
Control Files	rw,bg,hard,vers=3,proto=tcp,timeo=600,rsize=65536, wsize=65536,nointr
Redo Logs	rw,bg,hard,vers=3,proto=tcp,timeo=600,rsize=65536, wsize=65536,nointr
Datafiles	rw,bg,hard,vers=3,proto=tcp,timeo=600,rsize=65536, wsize=65536,nointr

About NetApp

NetApp is the data authority for hybrid cloud.We provide a full range of hybrid cloud data services that simplify management of data across cloud and on-premises environments to accelerate digital transformation. We empower global organizations to unleash the full potential of their data to expand customer touchpoints, foster greater innovation and optimize operations. For more information, visit: www.netapp.com #DataDriven

MySQL in the Clouds

NetApp Cloud Volumes Service For AWS

A review of MySQL performance as it pertains to the NetApp Cloud Volumes Service in AWS.

Authors: Ali Aiello, Chad Morgenstern, Ron Pratt

Are looking for consistently good performance for your MySQL database - I mean, really, who is going to answer no to that question? With or without snapshots, whether you are accessing the primary database or a snapshotted copy, you can expect excellent, consistent performance from the NetApp Cloud Volumes Service. Performance is of course not the whole story. Databases need durability, data is a crown jewel of any enterprise. Consumers demand the protection against theft provided by encryption, we've got that too, its managed by the service. Add to these the advantage of accessing database volumes from any availability zone within the region – without the need to replicate to make this possible – and you'll find that the NetApp Cloud Volumes Service is the ideal solution for your MySQL needs.

Please see the blog NetApp Cloud Volumes, Not Your Mothers File Service for details regarding how NetApp Cloud Volumes approaches durability, encryption, and availability as well as some really nice details regarding the Cloud Volumes snapshot technology.

The remainder of this blog focuses on MySQL performance.

Performance

When performing evaluations of database workloads, always keep in mind the impact of server memory. Ideally queries find their data resident therein as latency from memory is always going to be orders of magnitude lower than any "disk" query. What does this mean for you? While storage latency matters, memory hit percentage matters more. When database administrators say that they need a latency of X, keep in mind what they are talking about.

With that said…

The Workload Generator

To test MySQL with cloud volumes, NetApp used the TPC Benchmark C workload generator. TPCC is an industry standard online transaction processing (OLTP) benchmark that leverages actual MySQL databases and their I/O paths. Workload generators that leverage real applications are always preferred over more synthetic generators such as Vdbench, Iozone, and heaven forbid dd, tar, cpio, or cp. TPCC standardized on an 80/20 read:write workload, the test results in this section are based there on.

The Scenarios

Two scenarios were tested in this environment, the first evaluated the capabilities of a single instance to drive MySQL I/O, while the second set out to determine the edges of a single cloud volume. The results of both scenarios are shown in the graphic below. The gray line represents the single-instance and blue the multi-instance environment. Please note that the latency reported in the graphics below represent storage latency as reported by the database.

The Results

Run against the single instance, TPCC generated approximately 4.5Gbps worth of I/O which approaches the Amazon Web Service inter-VPC limit imposed per network connection. Run against multiple instances, TPCC generated just about 16Gbps of throughput against a single Cloud Volume - which is pretty darned cool.

Figure 1: MySQL TPCC Test Graphic

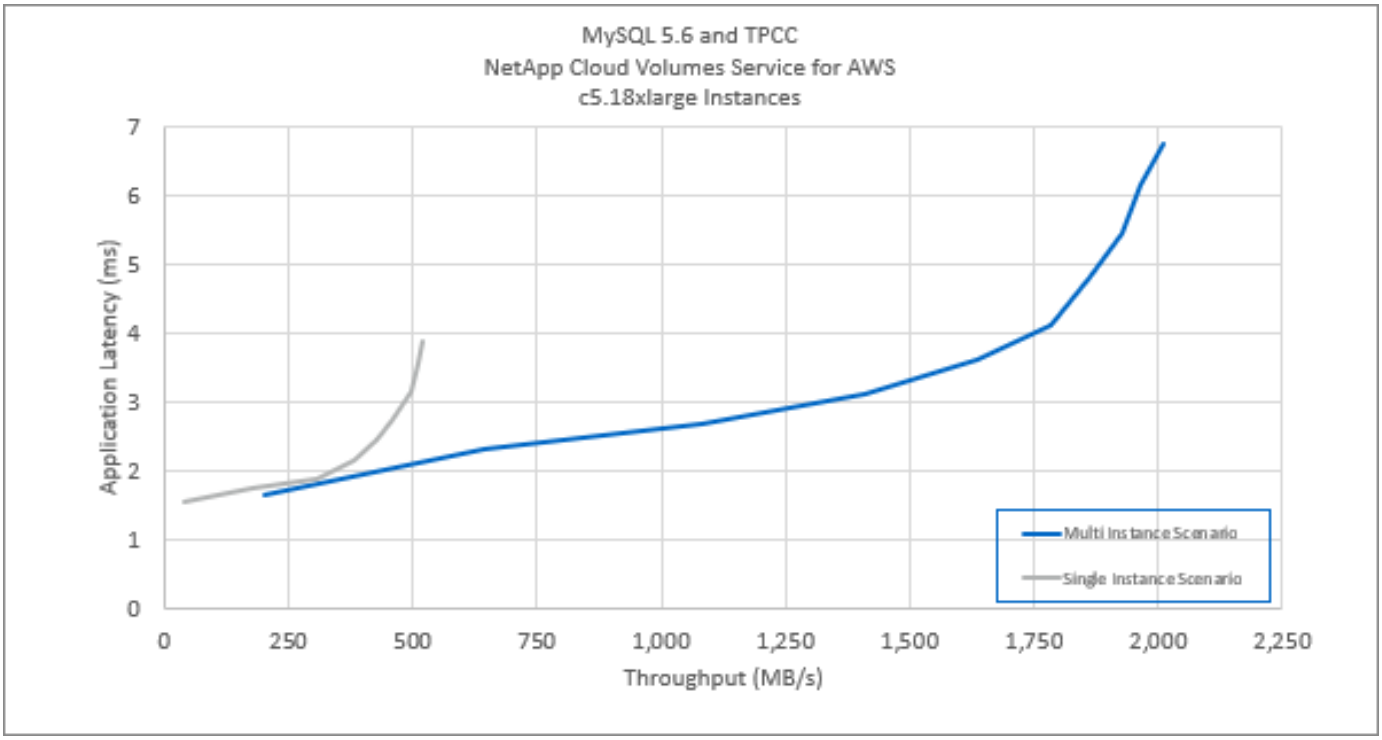

Best Practices

The following parameters were placed in the MySQL /etc/my.cnf configuration file.

- [MySQLd]
  - innodb_buffer_pool_size=23622320128
  - innodb_log_buffer_size=4294967295

- innodb_log_file_size=1073741824
- innodb_flush_log_at_trx_commit=2
- innodb_open_files=4096
- innodb_page_size=4096
- innodb_read_io_threads=64
- innodb_write_io_threads=64
- performance_schema
- innodb_doublewrite=0;
- max_connections=1000
- innodb_thread_concurrency=128
- innodb_max_dirty_pages_pct=0

About NetApp

NetApp is the data authority for hybrid cloud. We provide a full range of hybrid cloud data services that simplify management of data across cloud and on-premises environments to accelerate digital transformation. NetApp empowers global organizations to unleash the full potential of their data to expand customer touchpoints, foster greater innovation and optimize operations. For more information, visit: www.netapp.com #DataDriven

Copyright Information

Copyright © 2021 NetApp, Inc. All rights reserved. Printed in the U.S. No part of this document covered by copyright may be reproduced in any form or by any means-graphic, electronic, or mechanical, including photocopying, recording, taping, or storage in an electronic retrieval system-without prior written permission of the copyright owner.

Software derived from copyrighted NetApp material is subject to the following license and disclaimer:

THIS SOFTWARE IS PROVIDED BY NETAPP “AS IS” AND WITHOUT ANY EXPRESS OR IMPLIED WARRANTIES, INCLUDING, BUT NOT LIMITED TO, THE IMPLIED WARRANTIES OF MERCHANTABILITY AND FITNESS FOR A PARTICULAR PURPOSE, WHICH ARE HEREBY DISCLAIMED. IN NO EVENT SHALL NETAPP BE LIABLE FOR ANY DIRECT, INDIRECT, INCIDENTAL, SPECIAL, EXEMPLARY, OR CONSEQUENTIAL DAMAGES (INCLUDING, BUT NOT LIMITED TO, PROCUREMENT OF SUBSTITUTE GOODS OR SERVICES; LOSS OF USE, DATA, OR PROFITS; OR BUSINESS INTERRUPTION) HOWEVER CAUSED AND ON ANY THEORY OF LIABILITY, WHETHER IN CONTRACT, STRICT LIABILITY, OR TORT (INCLUDING NEGLIGENCE OR OTHERWISE) ARISING IN ANY WAY OUT OF THE USE OF THIS SOFTWARE, EVEN IF ADVISED OF THE POSSIBILITY OF SUCH DAMAGE.

NetApp reserves the right to change any products described herein at any time, and without notice. NetApp assumes no responsibility or liability arising from the use of products described herein, except as expressly agreed to in writing by NetApp. The use or purchase of this product does not convey a license under any patent rights, trademark rights, or any other intellectual property rights of NetApp.

The product described in this manual may be protected by one or more U.S. patents, foreign patents, or pending applications.

RESTRICTED RIGHTS LEGEND: Use, duplication, or disclosure by the government is subject to restrictions as set forth in subparagraph (c)(1)(ii) of the Rights in Technical Data and Computer Software clause at DFARS 252.277-7103 (October 1988) and FAR 52-227-19 (June 1987).

Trademark Information

NETAPP, the NETAPP logo, and the marks listed at http://www.netapp.com/TM are trademarks of NetApp, Inc. Other company and product names may be trademarks of their respective owners.