OpenShift on Bare Metal: Red Hat OpenShift with NetApp

NetApp Solutions

Alan V Cowles, Dorian Henderson
May 28, 2021

This PDF was generated from https://docs.netapp.com/us-en/netapp-solutions/containers/rh-os-n_openshift_BM.html on July 11, 2021. Always check docs.netapp.com for the latest.

Table of Contents

OpenShift on Bare Metal: Red Hat OpenShift with NetApp 1
OpenShift on Bare Metal provides the following features: 1
Network design 1

OpenShift on Bare Metal: Red Hat OpenShift with NetApp

OpenShift on Bare Metal provides an automated deployment of OpenShift Container Platform on commodity servers.

Similar to virtual deployments of OpenShift, which are quite popular because they allow for ease of deployment, rapid provisioning, and scaling of OpenShift clusters, while also supplying the need to support virtualized workloads for applications that are not ready to be containerized. By deploying on bare metal, a customer does require the extra overhead in managing the host hypervisor environment, as well as the OpenShift environment. By deploying directly on bare metal servers, the customer can also reduce the physical overhead limitations of having to share resources between the host and OpenShift environment.

OpenShift on Bare Metal provides the following features:

- **IPI or Assisted Installer Deployment** With an OpenShift cluster deployed by Installer Provisioned Infrastructure (IPI) on bare metal servers, customers can deploy an highly versatile, easily scalable OpenShift environment directly on commodity servers, without the need to manage a hypervisor layer.
- **Compact Cluster Design** To minimize the hardware requirements, OpenShift on bare metal allows for users to deploy clusters of just 3 nodes, by enabling the OpenShift control plane nodes to also act as worker nodes and host containers.
- **OpenShift Virtualization** OpenShift can run virtual machines within containers by using OpenShift Virtualization. This container-native virtualization runs the KVM hypervisor inside of a container, and attaches persistent volumes for VM storage.
- **AI/ML-Optimized Infrastructure** Deploy applications like Kubeflow for Machine Learning applications by incorporating GPU-based worker nodes to your OpenShift environment and leveragine OpenShift Advanced Scheduling.

Network design

The Red Hat OpenShift on NetApp solution uses two data switches to provide primary data connectivity at 25Gbps. It also uses two additional management switches that provide connectivity at 1Gbps for in-band management for the storage nodes and out-of-band management for IPMI functionality.

The OpenShift bare metal IPI deployment requires the customer to create a Provisioner node, a Red Hat Enterprise Linux 8 machine which will need to have network interfaces attached to separate networks.

- **Provisioning Network:** This network is used to boot the bare metal nodes and install the necessary images and packages to deploy the OpenShift cluster.
- **Baremetal Network:** This network is used for public facing communication of the cluster once it is deployed.

The setup of the provisioner node will have the customer create bridge interfaces that allow the traffic to route properly on both the node itself, and for the Bootstrap VM which will be provisioned for deployment purposes.

Once the cluster is deployed the API and Ingress VIP addresses are migrated from the bootstrap node to the newly deployed cluster.

The images below display the environment both during IPI deployment, and once the deployment is complete.

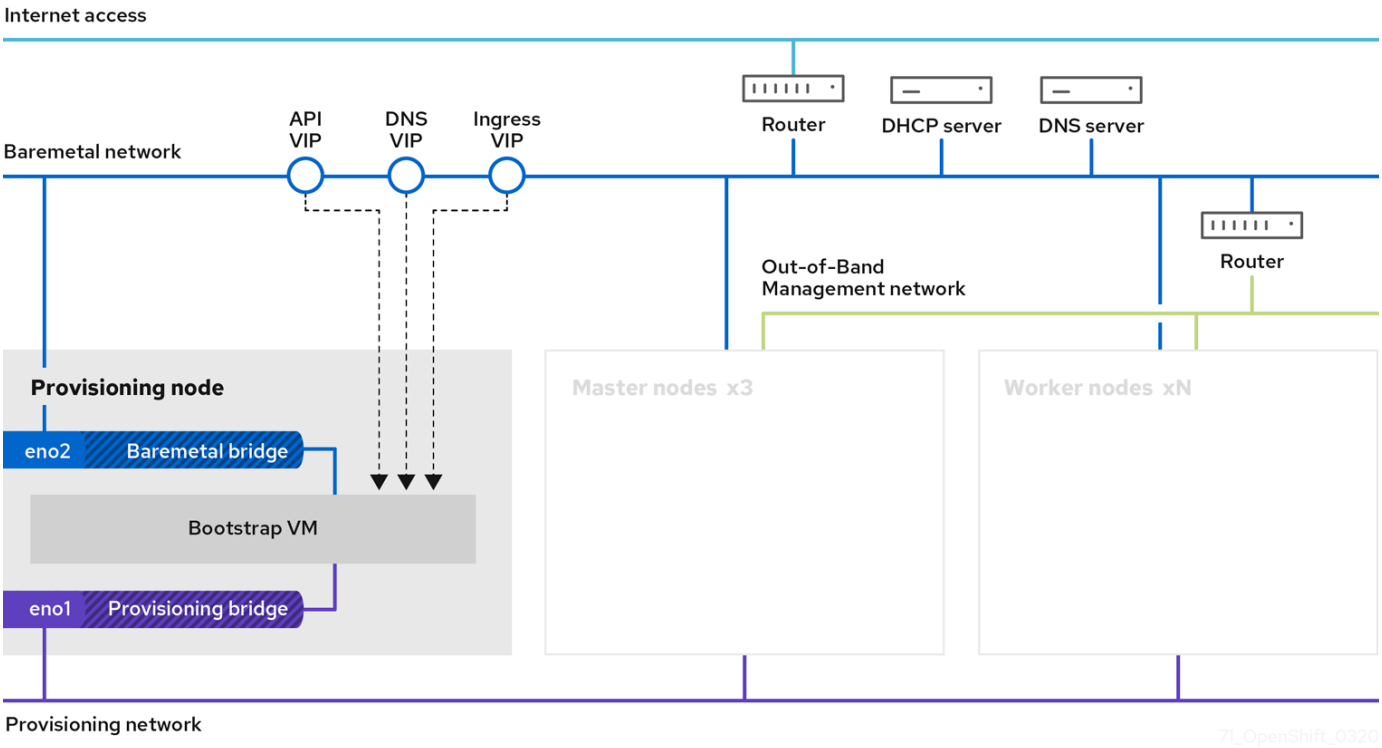

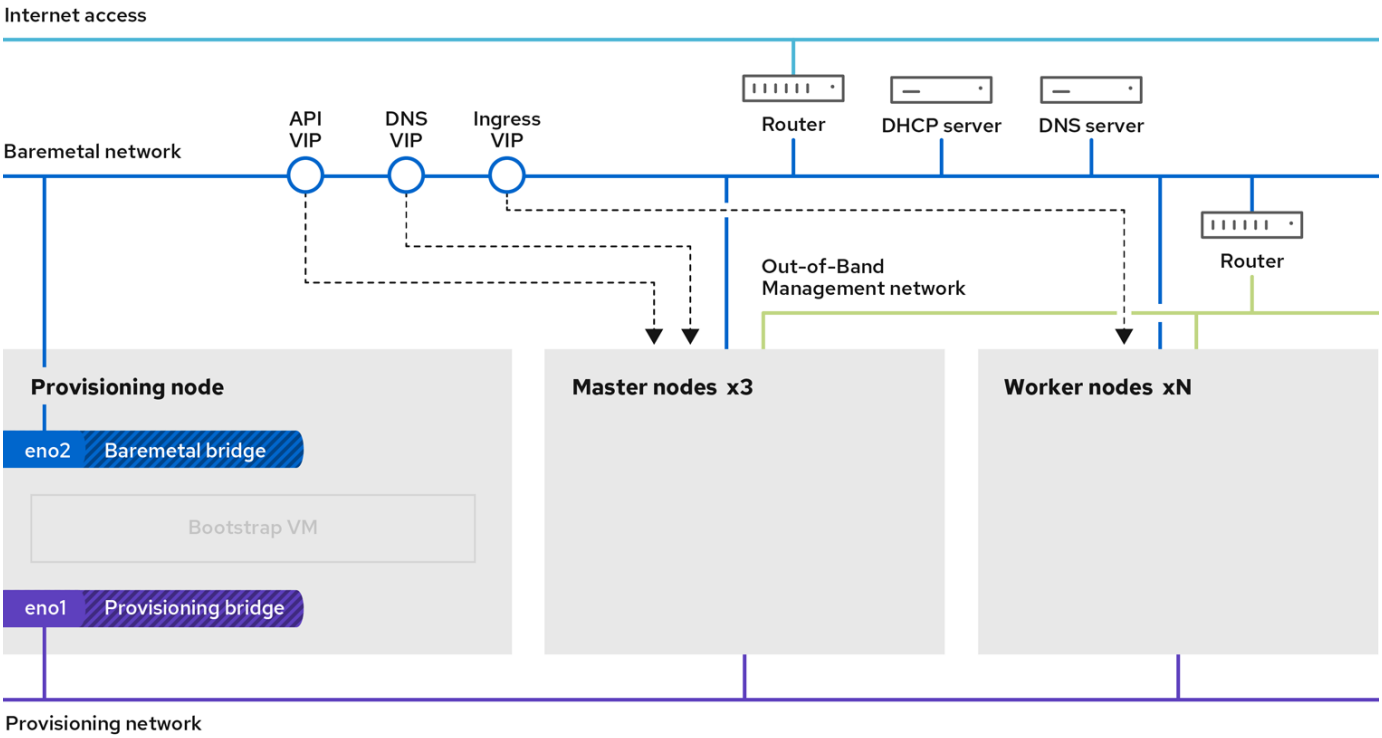

VLAN requirements

The Red Hat OpenShift with NetApp solution is designed to logically separate network traffic for different purposes by using virtual local area networks (VLANs).

VLANs	Purpose	VLAN ID
Out-of-band Management Network	Management for bare metal nodes and IPMI	16
Bare Metal Network	Network for OpenShift services once cluster is available	181
Provisioning Network	Network for PXE boot and installation of bare metal nodes via IPI	3485

While each of these networks were virtually separated by VLANs, each physical port needed to be set up in "access mode" with the primary VLAN assigned, as there is no way to pass a VLAN tag during a PXE boot sequence.

Network infrastructure support resources

The following infrastructure should be in place prior to the deployment of the OpenShift Container Platform:

- At least one DNS server which provides a full host-name resolution that is accessible from the in-band management network and the VM network.
- At least one NTP server that is accessible from the in-band management network and the VM network.
- (Optional) Outbound internet connectivity for both the in-band management network and the VM network.

Next: NetApp Storage Overview.

Copyright Information

Copyright © 2021 NetApp, Inc. All rights reserved. Printed in the U.S. No part of this document covered by copyright may be reproduced in any form or by any means-graphic, electronic, or mechanical, including photocopying, recording, taping, or storage in an electronic retrieval system-without prior written permission of the copyright owner.

Software derived from copyrighted NetApp material is subject to the following license and disclaimer:

THIS SOFTWARE IS PROVIDED BY NETAPP “AS IS” AND WITHOUT ANY EXPRESS OR IMPLIED WARRANTIES, INCLUDING, BUT NOT LIMITED TO, THE IMPLIED WARRANTIES OF MERCHANTABILITY AND FITNESS FOR A PARTICULAR PURPOSE, WHICH ARE HEREBY DISCLAIMED. IN NO EVENT SHALL NETAPP BE LIABLE FOR ANY DIRECT, INDIRECT, INCIDENTAL, SPECIAL, EXEMPLARY, OR CONSEQUENTIAL DAMAGES (INCLUDING, BUT NOT LIMITED TO, PROCUREMENT OF SUBSTITUTE GOODS OR SERVICES; LOSS OF USE, DATA, OR PROFITS; OR BUSINESS INTERRUPTION) HOWEVER CAUSED AND ON ANY THEORY OF LIABILITY, WHETHER IN CONTRACT, STRICT LIABILITY, OR TORT (INCLUDING NEGLIGENCE OR OTHERWISE) ARISING IN ANY WAY OUT OF THE USE OF THIS SOFTWARE, EVEN IF ADVISED OF THE POSSIBILITY OF SUCH DAMAGE.

NetApp reserves the right to change any products described herein at any time, and without notice. NetApp assumes no responsibility or liability arising from the use of products described herein, except as expressly agreed to in writing by NetApp. The use or purchase of this product does not convey a license under any patent rights, trademark rights, or any other intellectual property rights of NetApp.

The product described in this manual may be protected by one or more U.S. patents, foreign patents, or pending applications.

RESTRICTED RIGHTS LEGEND: Use, duplication, or disclosure by the government is subject to restrictions as set forth in subparagraph (c)(1)(ii) of the Rights in Technical Data and Computer Software clause at DFARS 252.277-7103 (October 1988) and FAR 52-227-19 (June 1987).

Trademark Information

NETAPP, the NETAPP logo, and the marks listed at http://www.netapp.com/TM are trademarks of NetApp, Inc. Other company and product names may be trademarks of their respective owners.