ONTAP capabilities for vSphere

NetApp Solutions

Dorian Henderson
March 12, 2021

This PDF was generated from https://docs.netapp.com/us-en/netapp-solutions/hybrid-cloud/vsphere_ontap_ontap_capabilities_for_vsphere.html on July 11, 2021. Always check docs.netapp.com for the latest.

Table of Contents

ONTAP capabilities for vSphere . . . 1
Protocols . . . 1
Features . . . 1
ONTAP licensing . . . 1
Virtualization tools for ONTAP . . . 2

ONTAP capabilities for vSphere

Protocols

ONTAP supports all major storage protocols used for virtualization, such as iSCSI, Fibre Channel (FC), Fibre Channel over Ethernet (FCoE), or Non-Volatile Memory Express over Fibre Channel (NVMe/FC) for SAN environments, as well as NFS (v3 and v4.1), and SMB or S3 for guest connections. Customers are free to pick what works best for their environment and can combine protocols as needed on a single system (for example, augmenting general use of NFS datastores with a few iSCSI LUNs or guest shares).

Features

There are many ONTAP features that are useful for managing virtualized workloads. Some that require additional product licenses are described in the next section. Others packaged as standalone tools, some for ONTAP and others for the entire NetApp portfolio, are described after that.

Here are further details about base ONTAP features:

- **NetApp Snapshot copies.** ONTAP offers instant Snapshot copies of a VM or datastore with zero performance effect when you create or use a Snapshot copy. They can be used to create a restoration point for a VM prior to patching or for simple data protection. Note that these are different from VMware (consistency) snapshots. The easiest way to make an ONTAP Snapshot copy is to use the SnapCenter Plug-In for VMware vSphere to back up VMs and datastores.
- **Storage efficiency.** ONTAP supports inline and background deduplication and compression, zero-block deduplication, and data compaction.
- **Volume and LUN move.** Allows nondisruptive movement of volumes and LUNs supporting vSphere datastores and vVols within the ONTAP cluster to balance performance and capacity or support nondisruptive maintenance and upgrades.
- **QoS.** QoS allows for managing performance on an individual LUN, volume, or file. This function can be used to limit an unknown or bully VM or to make sure an important VM gets sufficient performance resources.
- **NetApp Volume Encryption, NetApp Aggregate Encryption.** NetApp encryption options offer easy software-based encryption to protect data at rest.
- **FabricPool.** This feature tiers colder data automatically at the block level to a separate object store, freeing up expensive flash storage.
- **REST, Ansible.** Use ONTAP REST APIs to automate storage and data management, and Ansible modules for configuration management of your ONTAP systems.Note that some ONTAP features are not well-suited for vSphere workloads. For example, FlexGroup prior to ONTAP 9.8 did not have full cloning support and was not tested with vSphere (see the FlexGroup section for the latest on using it with vSphere). FlexCache is also not optimal for vSphere as it is designed for read-mostly workloads. Writes can be problematic when the cache is disconnected from the origin, resulting in NFS datastore errors on both sides.

ONTAP licensing

Some ONTAP features that are valuable for managing virtualized workloads require an additional license, whether available at no additional cost, in a license bundle, or a la carte. For many customers, the most cost-effective approach is with a license bundle. Here are the key licenses relevant to vSphere and how they are used:

- **FlexClone.** FlexClone enables instant, space-efficient clones of ONTAP volumes and files. This cloning is used when operations are offloaded to the storage system by VMware vSphere Storage APIs – Array Integration (VAAI), for backup verification and recovery (SnapCenter software), and for vVols cloning and Snapshot copies. Here is how they are used:
  - VAAI is supported with ONTAP for offloaded copy in support of vSphere clone and migration (Storage vMotion) operations. The FlexClone license allows for fast clones within a NetApp FlexVol volume, but, if not licensed, it still allows clones using slower block copies.
  - A FlexClone license is required for vVols functionality. It enables cloning of vVols within a single datastore or between datastores, and it enables vSphere-managed Snapshot copies of vVols, which are offloaded to the storage system.
- The storage replication adapter (SRA) is used with VMware Site Recovery Manager, and a FlexClone license is required to test recovery in both NAS and SAN environments. SRA may be used without FlexClone for discovery, recovery, and reprotection workflows.
- **SnapRestore.** SnapRestore technology enables instant recovery of a volume in place without copying data. It is required by NetApp backup and recovery tools such as SnapCenter where it is used to mount the datastore for verification and restore operations.
- **SnapMirror.** SnapMirror technology allows for simple, fast replication of data between ONTAP systems on-premises and in the cloud. SnapMirror supports the version flexibility of logical replication with the performance of block replication, sending only changed data to the secondary system. Data can be protected with mirror and/or vault policies, allowing for disaster recovery as well as long-term data retention for backup. SnapMirror supports asynchronous as well as synchronous relationships, and ONTAP 9.8 introduces transparent application failover with SnapMirror Business Continuity.

  SnapMirror is required for SRA replication with Site Recovery Manager. It is also required for SnapCenter to enable replication of Snapshot copies to a secondary storage system.

- **SnapCenter.** SnapCenter software provides a unified, scalable platform and plug-in suite for application-consistent data protection and clone management. A SnapCenter license is included with the data protection license bundles for AFF and FAS systems. SnapCenter Plug-in for VMware vSphere is a free product if you are using the following storage systems: FAS, AFF, Cloud Volumes ONTAP, or ONTAP Select. However, SnapRestore and FlexClone licenses are required.
- **MetroCluster.** NetApp MetroCluster is a synchronous replication solution combining high availability and disaster recovery in a campus or metropolitan area to protect against both site disasters and hardware outages. It provides solutions with transparent recovery from failure, with zero data loss (0 RPO) and fast recovery (RTO within minutes). It is used in vSphere environments as part of a vSphere Metro Storage Cluster configuration.

Virtualization tools for ONTAP

NetApp offers several standalone software tools that can be used together with ONTAP and vSphere to manage your virtualized environment. The following tools are included with the ONTAP license at no additional cost. See Figure 1 for a depiction of how these tools work together in your vSphere environment.

ONTAP tools for VMware vSphere

ONTAP tools for VMware vSphere is a set of tools for using ONTAP storage together with vSphere. The vCenter plug-in, formerly known as the Virtual Storage Console (VSC), simplifies storage management and efficiency features, enhances availability, and reduces storage costs and operational overhead, whether you are using SAN or NAS. It uses best practices for provisioning datastores and optimizes ESXi host settings for NFS and block storage environments. For all these benefits, NetApp recommends using these ONTAP tools as a best practice when using vSphere with systems running ONTAP software. It includes both a server appliance

and user interface extensions for vCenter.

NFS Plug-In for VMware VAAI

The NetApp NFS Plug-In for VMware is a plug-in for ESXi hosts that allows them to use VAAI features with NFS datastores on ONTAP. It supports copy offload for clone operations, space reservation for thick virtual disk files, and Snapshot copy offload. Offloading copy operations to storage is not necessarily faster to complete, but it does offload host resources such as CPU cycles, buffers, and queues. You can use ONTAP tools for VMware vSphere to install the plug-in on ESXi hosts.

VASA Provider for ONTAP

The VASA Provider for ONTAP supports the VMware vStorage APIs for Storage Awareness (VASA) framework. It is supplied as part of ONTAP tools for VMware vSphere as a single virtual appliance for ease of deployment. VASA Provider connects vCenter Server with ONTAP to aid in provisioning and monitoring VM storage. It enables VMware Virtual Volumes (vVols) support, management of storage capability profiles and individual VM vVols performance, and alarms for monitoring capacity and compliance with the profiles.

Storage Replication Adapter

The SRA is used together with VMware Site Recovery Manager (SRM) to manage data replication between production and disaster recovery sites and test the DR replicas nondisruptively. It helps automate the tasks of discovery, recovery, and reprotection. It includes both an SRA server appliance and SRA adapters for the Windows SRM server and SRM appliance. The SRA is supplied as part of ONTAP tools for VMware vSphere.

The following figure depicts ONTAP tools for vSphere.

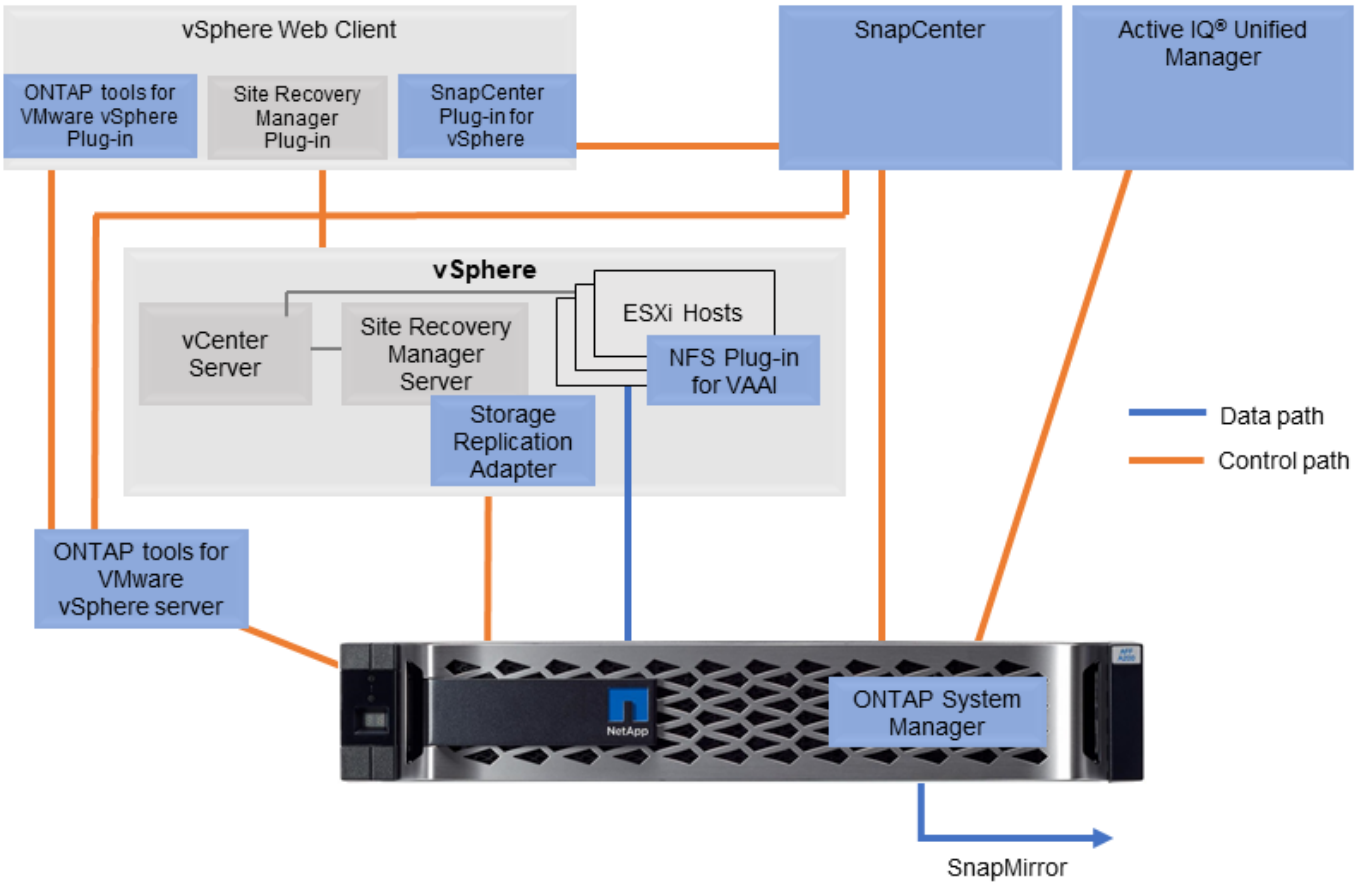

Copyright Information

Copyright © 2021 NetApp, Inc. All rights reserved. Printed in the U.S. No part of this document covered by copyright may be reproduced in any form or by any means-graphic, electronic, or mechanical, including photocopying, recording, taping, or storage in an electronic retrieval system-without prior written permission of the copyright owner.

Software derived from copyrighted NetApp material is subject to the following license and disclaimer:

THIS SOFTWARE IS PROVIDED BY NETAPP “AS IS” AND WITHOUT ANY EXPRESS OR IMPLIED WARRANTIES, INCLUDING, BUT NOT LIMITED TO, THE IMPLIED WARRANTIES OF MERCHANTABILITY AND FITNESS FOR A PARTICULAR PURPOSE, WHICH ARE HEREBY DISCLAIMED. IN NO EVENT SHALL NETAPP BE LIABLE FOR ANY DIRECT, INDIRECT, INCIDENTAL, SPECIAL, EXEMPLARY, OR CONSEQUENTIAL DAMAGES (INCLUDING, BUT NOT LIMITED TO, PROCUREMENT OF SUBSTITUTE GOODS OR SERVICES; LOSS OF USE, DATA, OR PROFITS; OR BUSINESS INTERRUPTION) HOWEVER CAUSED AND ON ANY THEORY OF LIABILITY, WHETHER IN CONTRACT, STRICT LIABILITY, OR TORT (INCLUDING NEGLIGENCE OR OTHERWISE) ARISING IN ANY WAY OUT OF THE USE OF THIS SOFTWARE, EVEN IF ADVISED OF THE POSSIBILITY OF SUCH DAMAGE.

NetApp reserves the right to change any products described herein at any time, and without notice. NetApp assumes no responsibility or liability arising from the use of products described herein, except as expressly agreed to in writing by NetApp. The use or purchase of this product does not convey a license under any patent rights, trademark rights, or any other intellectual property rights of NetApp.

The product described in this manual may be protected by one or more U.S. patents, foreign patents, or pending applications.

RESTRICTED RIGHTS LEGEND: Use, duplication, or disclosure by the government is subject to restrictions as set forth in subparagraph (c)(1)(ii) of the Rights in Technical Data and Computer Software clause at DFARS 252.277-7103 (October 1988) and FAR 52-227-19 (June 1987).

Trademark Information

NETAPP, the NETAPP logo, and the marks listed at http://www.netapp.com/TM are trademarks of NetApp, Inc. Other company and product names may be trademarks of their respective owners.