Implementing E-Series storage

ONTAP FlexArray

NetApp
March 29, 2022

This PDF was generated from https://docs.netapp.com/us-en/ontap-flexarray/implement-e-series/concept_where_to_find_information_about_support_for_storage_arrays.html on March 29, 2022.
Always check docs.netapp.com for the latest.

Table of Contents

FlexArray® Virtualization Implementation Guide for NetApp® E-Series Storage . . . 1
Where to find information for configurations with storage arrays . . . 1
ONTAP systems that can use array LUNs on storage arrays . . . 2
Requirements for configuring E-Series storage arrays . . . 2
Supported fabric-attached configurations for E-Series storage arrays . . . 3
Supported direct-attached configurations with E-Series storage arrays . . . 10

FlexArray® Virtualization Implementation Guide for NetApp® E-Series Storage

Where to find information for configurations with storage arrays

When planning your configuration for using ONTAP systems with storage arrays, you should check various sources for information about array LUN configuration in addition to the product documentation.

Tools available on the NetApp Support Site provide, in a central location, specific information about which features, configurations, and storage array models are supported in particular releases.

Where to find information about ONTAP support for storage arrays

Not all ONTAP releases support the same features, configurations, system models, and storage array models. During your deployment planning, you must check ONTAP support information to verify that your deployment conforms to ONTAP hardware and software requirements for all systems in the deployment.

The following table lists the information sources that contain the details of the hardware and software requirements associated with ONTAP systems:

For information about…	You should look here…
Tasks for ONTAP implementation with storage arrays, including the following: • Planning the implementation • Connecting the ONTAP systems and the array • Verifying the installation	FlexArray virtualization installation requirements and reference
ONTAP working with devices, including the following: • Supported storage arrays and storage array firmware • Supported switches and switch firmware • Whether your storage array supports nondisruptive (live) upgrade of the storage array firmware • Whether a MetroCluster configuration is supported with your storage array	NetApp Interoperability Matrix Tool You can view information about advanced feature support for E-Series storage arrays with FlexArray Virtualization by referring to the appropriate notes on the V-Series and FlexArray Virtualization for Back-end Storage solution page of the Interoperability Matrix

For information about…	You should look here…
ONTAP limits for releases and platforms, including the following: • Minimum and maximum array LUN sizes, including the minimum array LUN size for the root volume and spare core array LUNs • Minimum aggregate size for aggregates with array LUNs • Supported block size • Minimum and maximum capacity • Neighborhood limits	NetApp Hardware Universe
Setting up E-Series storage arrays, including the following: • Site preparation requirements • Cabling instructions • SANtricity software installation and configuration instructions	The following E-Series documentation: • *E-Series Storage Systems Site Preparation Guide* • *E-Series Storage Systems Hardware Cabling Guide* • *SANtricity ES Storage Manager documentation* You can access these documents from the NetApp Support site. NetApp Support

ONTAP systems that can use array LUNs on storage arrays

You can use supported FAS and V-Series systems with array LUNs.

The NetApp Interoperability Matrix Tool lists the supported combinations of hardware and software.

Related information

NetApp Interoperability Matrix Tool

Requirements for configuring E-Series storage arrays

There are system parameters that you must set and considerations to keep in mind when configuring a storage array to work with an ONTAP system.

Required host type for E-Series storage arrays

You must set the appropriate host type option for the E-Series storage array to communicate with the ONTAP systems. You can use SANtricity Storage Manager to set the host type.

For a given ONTAP release, you can set the required host type based on the version of the storage array

firmware.

If your firmware version is 08.10.15.00 and later, then set the host type to *Data ONTAP (ALUA)*.

> The minimum supported version of SANtricity Storage Manager for firmware version 08.10.15.00 and later is 11.10.0G00.0026.

When using E-Series Controller Firmware 8.25, ONTAP RDAC is no longer supported as a host type on the E-Series system. Therefore, if you are using ONTAP RDAC, then before upgrading the backend array to CFW 8.25 or later you must follow this Knowledgebase article to convert it to ONTAP ALUA.

Related information

How to non-disruptively change between Active-Passive and ALUA failover modes on NetApp E-Series arrays connected to clustered Data ONTAP systems

Supported fabric-attached configurations for E-Series storage arrays

You can connect only certain E-Series storage arrays in fabric-attached configurations with ONTAP systems

The Interoperability Matrix contains additional information about specific array models.

Related information

NetApp Interoperability Matrix Tool

Stand-alone basic configuration

The stand-alone basic configuration of an ONTAP system that uses array LUNs is a simple, fabric-attached configuration with a single FC initiator port pair accessing a single LUN group.

This configuration is supported for use with all storage arrays listed in the Interoperability Matrix as supported for the release of ONTAP running on your system.

The following illustration shows this configuration:

Related information

NetApp Interoperability Matrix Tool

Stand-alone system with two 2-port array LUN groups

In a stand-alone ONTAP system that is in a fabric-attached simple configuration, each FC initiator port pair present on the ONTAP system accesses a separate array LUN group.

This configuration is supported for use with all storage arrays listed in the Interoperability Matrix as supported for the release of ONTAP running on your system.

The following illustration shows fabric-attached simple configuration:

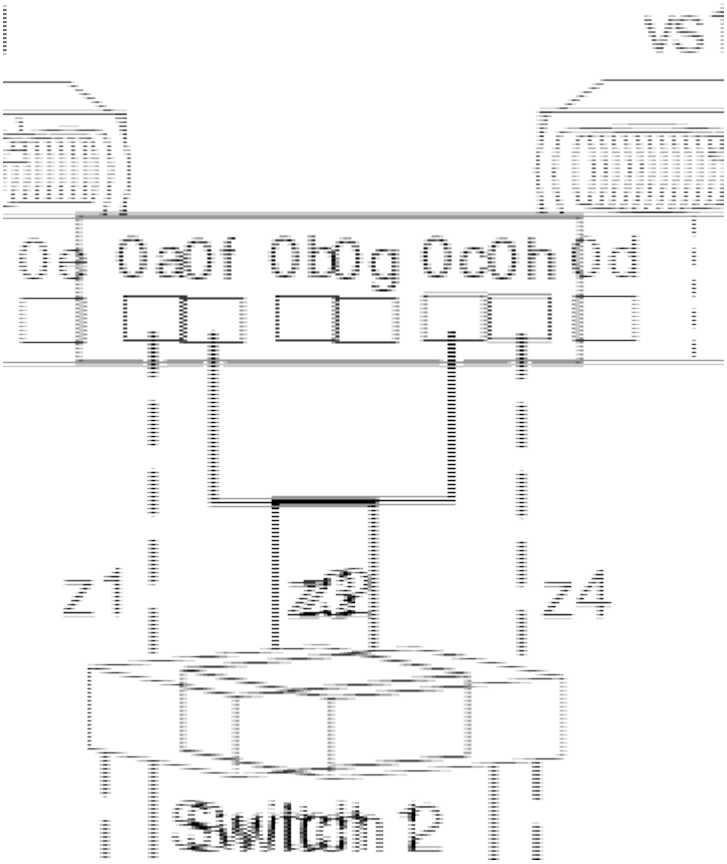

Related information

NetApp Interoperability Matrix Tool

Single 4-port array LUN group configuration

This configuration contains a single, 4-port LUN group with each target port accessed by a single ONTAP FC initiator port from the HA pair. Due to zoning, only two paths are allowed to a specific array LUN from each of the ONTAP system.

This configuration is supported for use with all storage arrays listed in the Interoperability Matrix as supported for the release of ONTAP running on your system.

The following illustration shows this configuration:

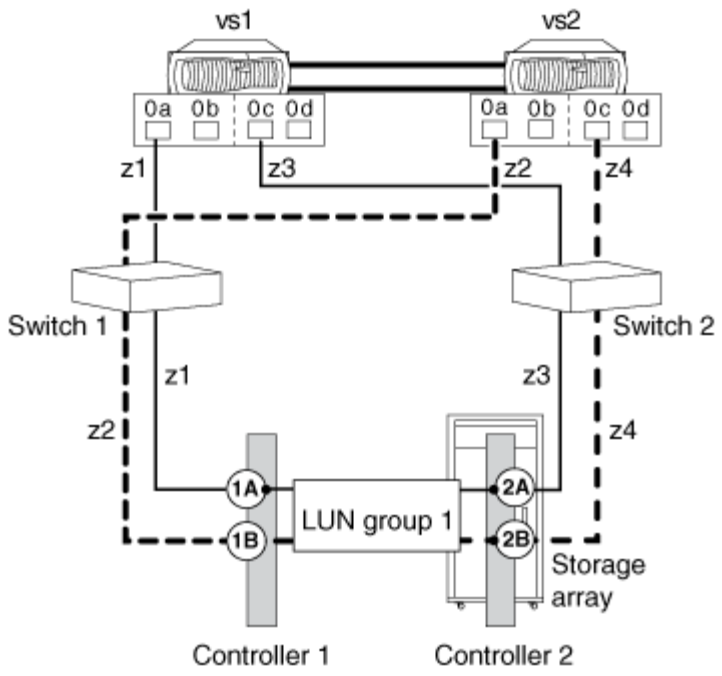

Related information

NetApp Interoperability Matrix Tool

Two 4-port array LUN group configuration

In this configuration, each ONTAP FC initiator port pair accesses a separate array LUN group. The zoning is a single ONTAP FC initiator to a single array target port.

This configuration is supported for use with all storage arrays listed in the Interoperability Matrix as supported for the release of ONTAP running on your system.

The following illustration shows a block diagram of this configuration:

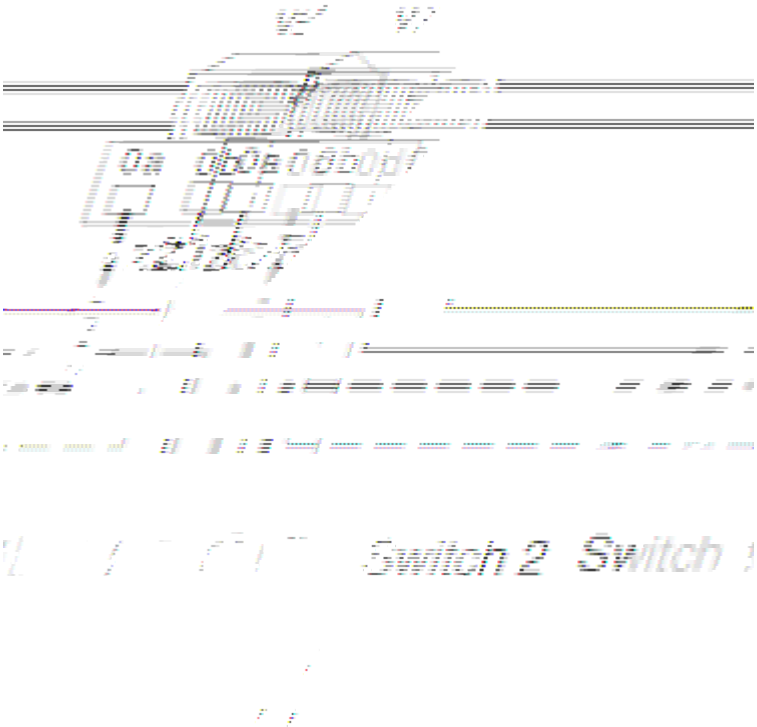

Related information

NetApp Interoperability Matrix Tool

Eight-port array LUN group configuration

An eight-port LUN group configuration is supported on clustered V-Series systems and on ONTAP systems that can use array LUNs.

This configuration is supported for use with all storage arrays listed in the Interoperability Matrix as supported for the release of ONTAP running on your system.

There are two ways of deploying this configuration: crossed and uncrossed back-end connections.

Crossed back-end connections

In this configuration with the back-end connections crossed, the FC connections from the same storage array controller go to both fabric switches (redundant).

In this illustration of crossed back-end connections, note how the nodes are attached to the switches and to the storage array. Vs1 uses switch 1 when attaching to the storage array Controller 1 port 1A and Controller 2 port 2C, and uses switch 2 when attaching to storage array Controller 2 ports 2A and Controller 1 port 1C. This optimizes the use of switch ports and array ports, which reduces the impact of a switch or storage array controller failure.

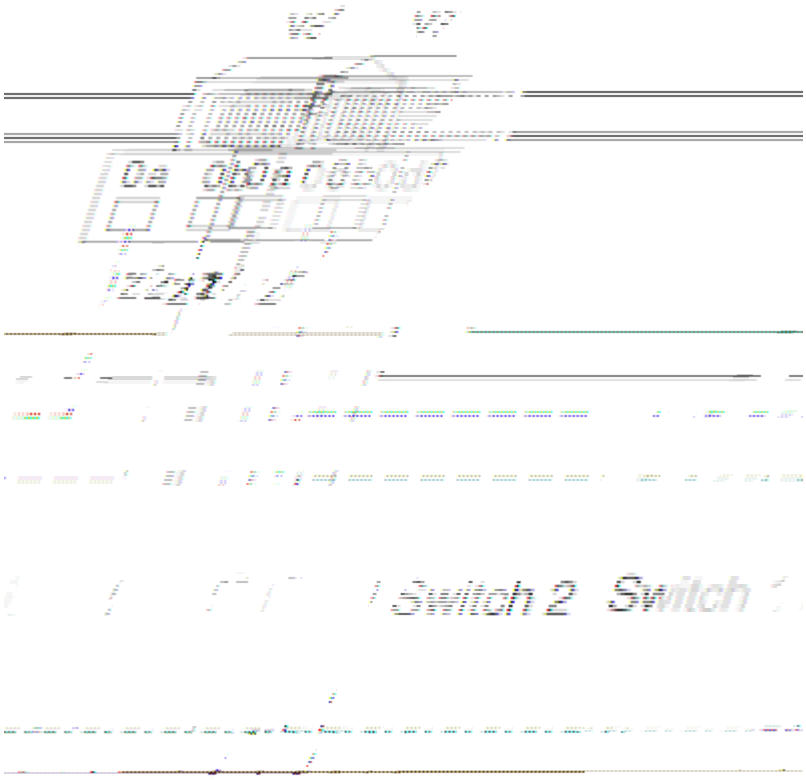

Back-end connections are not crossed

In this configuration in which the back-end connections are not crossed, the FC connections from the same storage array controller go to only one fabric switch.

The following illustration shows this configuration when the back-end connections are not crossed.

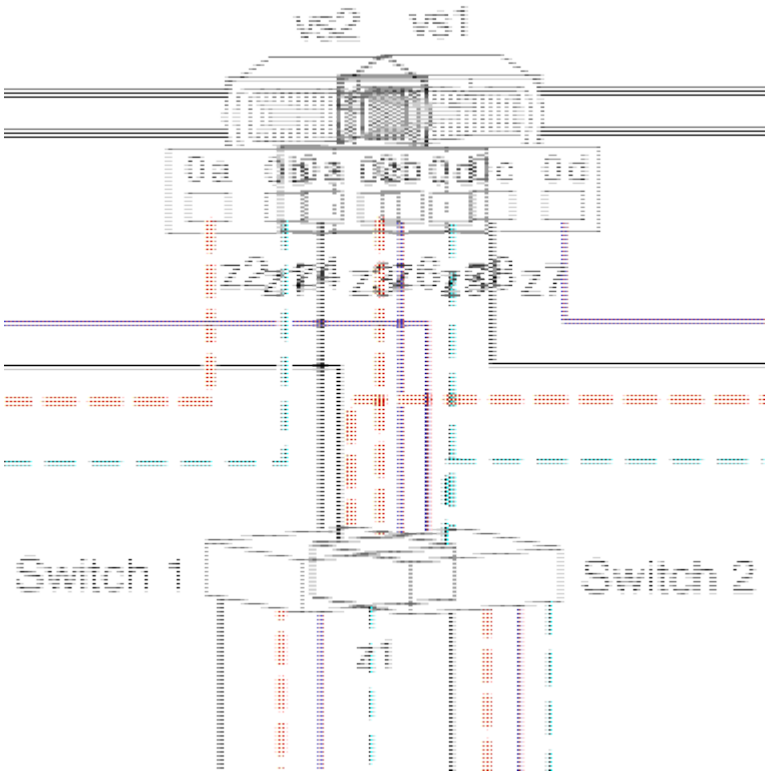

Related information

NetApp Interoperability Matrix Tool

Attaching FC initiator port to multiple targets ports

You can connect an FC initiator port on an ONTAP system to multiple target ports on separate storage arrays within the same family. This configuration is supported with MetroCluster configurations in ONTAP.

ONTAP supports sharing an FC initiator port with multiple target ports in both HA pairs and in stand-alone systems. This configuration is supported for use with all storage arrays listed in the Interoperability Matrix as supported for the release of ONTAP running on your system.

> For details about sharing an FC initiator port with multiple target ports and zoning, see the information in the *FlexArray Virtualization Installation Requirements and Reference*

Single ONTAP FC initiator port connecting to target ports on separate storage arrays

The following example shows an HA pair in which a single ONTAP FC initiator port connects to multiple target ports on different storage arrays:

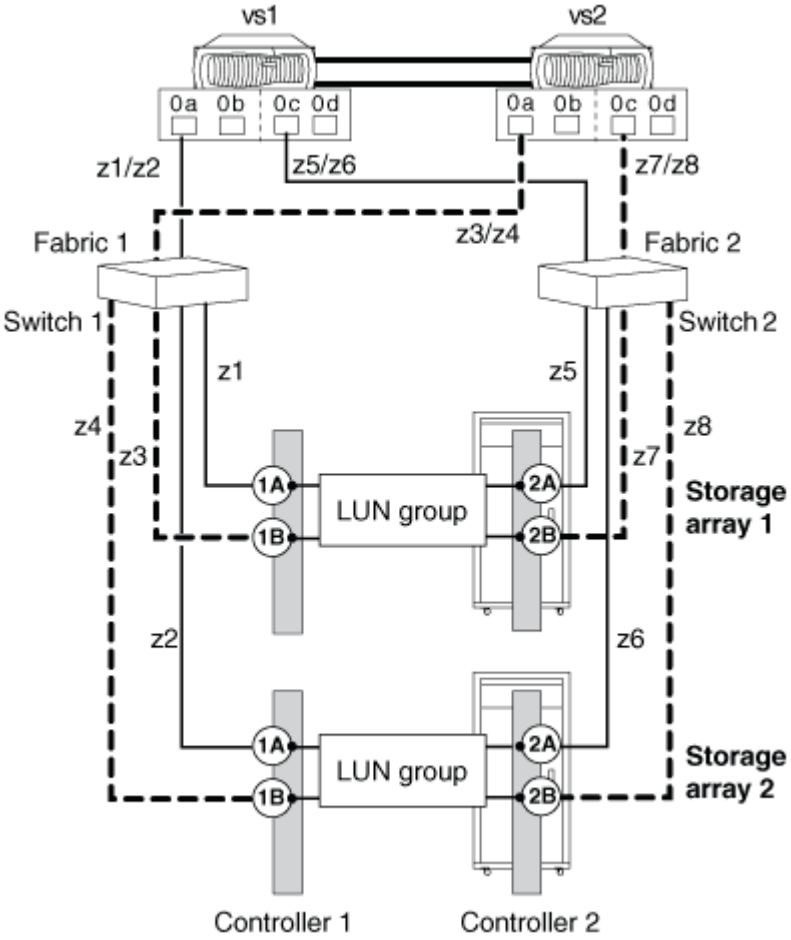

Related information

NetApp Interoperability Matrix Tool

FlexArray virtualization installation requirements and reference

Fabric-attached MetroCluster installation and configuration

Sharing a target port with two FC initiator ports

A maximum of two ONTAP FC initiator ports across nodes can be attached to a single target port on the storage array. This configuration is supported with MetroCluster configurations in ONTAP.

This configuration is supported for use with all storage arrays listed in the Interoperability Matrix as supported for the release of ONTAP running on your system.

The following illustration shows a shared target port configuration with an HA pair. Sharing a target port with two FC initiator ports is supported with both stand-alone systems and HA pairs.

> For details about sharing an FC initiator port with multiple target ports and zoning, see the *FlexArray Virtualization Installation Requirements and Reference*

Shared target port attached to FC initiator ports

The following example shows an HA pair in which a single target port connects to two FC initiator ports:

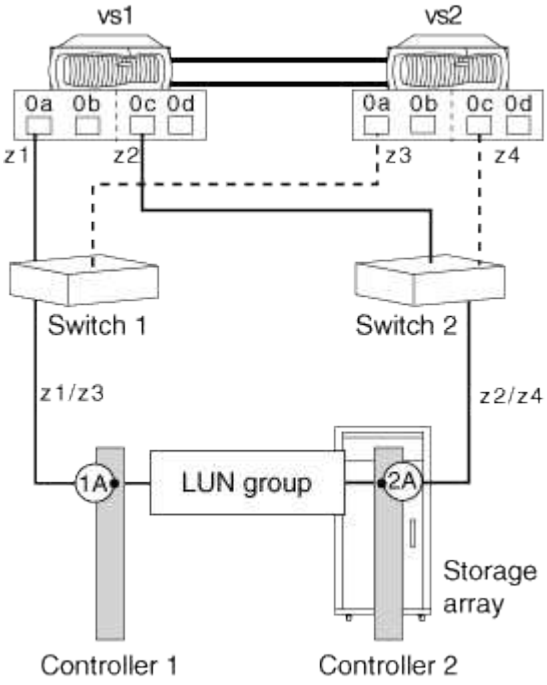

The initiator ports 0a of controllers vs1 and vs2 are connected to the storage array port 1A and ports 0c of the controllers are connected to the storage array port 2A.

Related information

NetApp Interoperability Matrix Tool

FlexArray virtualization installation requirements and reference

Supported direct-attached configurations with E-Series storage arrays

You can connect ONTAP systems in direct-attached configurations with E-Series storage arrays. You must verify redundancy in connections between the ONTAP systems and the storage arrays to avoid the possibility of a single point of failure. FlexArray Stretch MetroCluster supports direct-attached configurations with E-Series storage arrays. For more information see, Interoperability Matrix and *Stretch MetroCluster Installation and Configuration Guide*

The Interoperability Matrix contains information about the specific E-Series array models that are supported in direct-attached configurations with ONTAP system.

ONTAP supports the following direct-attached configurations with E-Series storage arrays:

Stand-alone basic configuration

In a stand-alone basic configuration, two FC initiator ports from the ONTAP system access the ports of a two-port array LUN group.

The following illustration shows a direct-attached configuration where the ONTAP FC initiator ports 0a and 0h access the target ports of a two-port array LUN group:

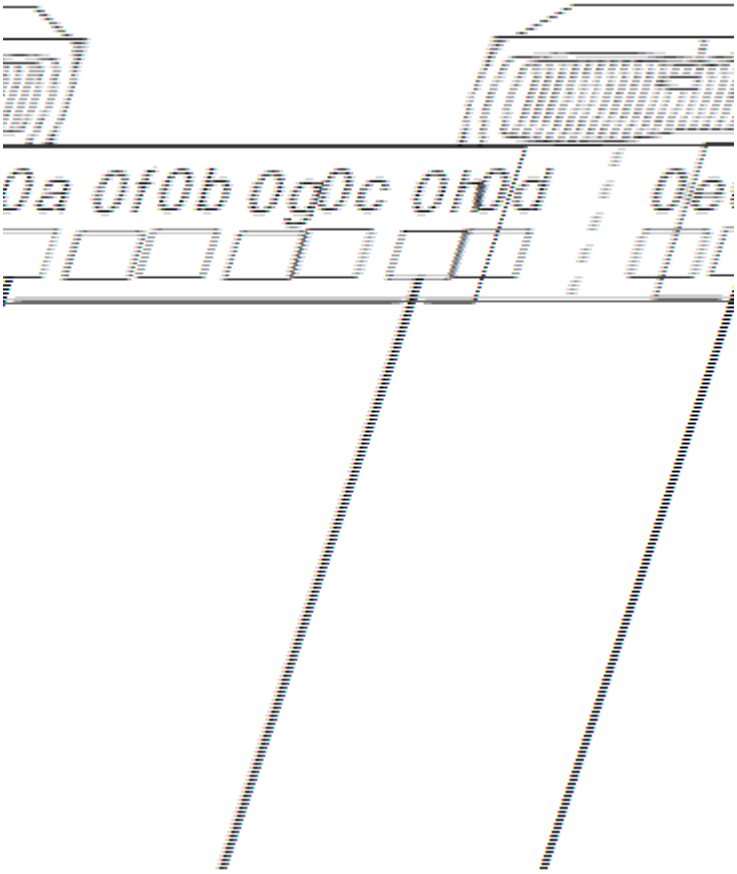

Four-port array LUN group

Two FC initiator ports from each ONTAP system in an HA pair access different storage array ports in a four-port array LUN group for redundancy in connections.

The following illustration shows a direct-attached configuration where the ONTAP FC initiator ports access the target ports of a four-port array LUN group.

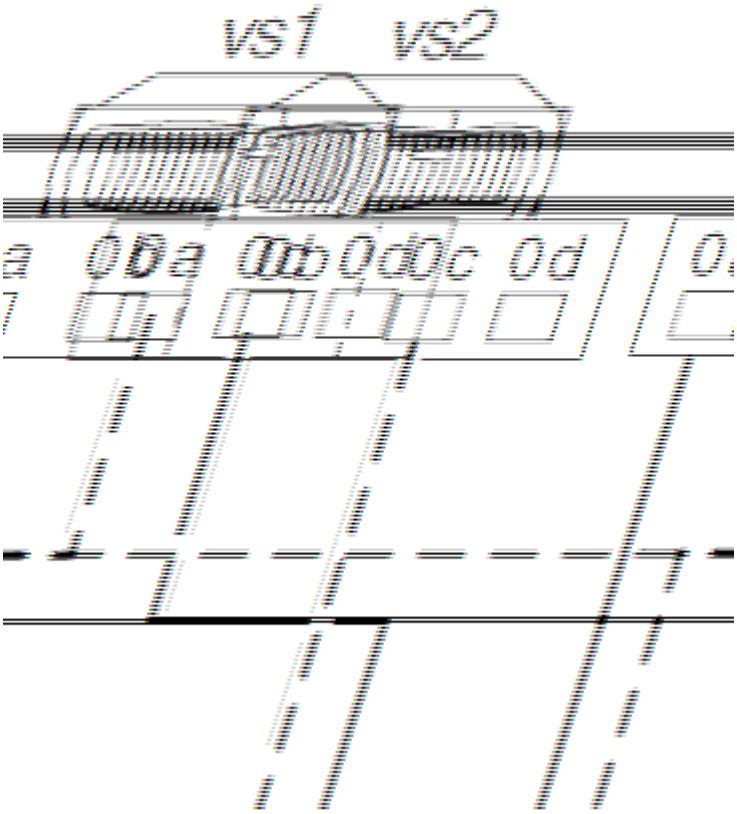

You can also connect four FC initiator ports from each ONTAP system in the HA pair to two different four-port array LUN groups such that each FC initiator port in a port pair accesses the alternate LUN group.

The following illustration shows a direct-attached configuration where the ONTAP FC initiator ports access the target ports of two four-port array LUN groups:

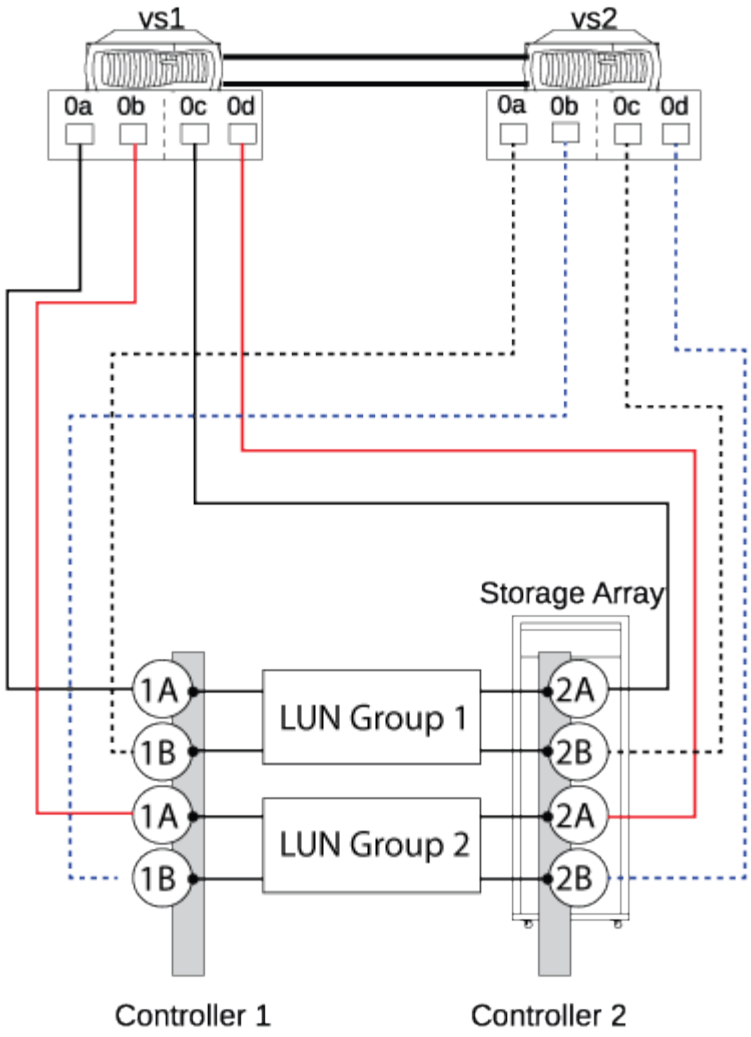

Eight-port array LUN group

Four FC initiator ports from each ONTAP system in an HA pair access different storage array ports in an eight-port array LUN group for redundancy in connections.

The following illustration shows a direct-attached configuration where the ONTAP FC initiator ports access the target ports of an eight-port array LUN group:

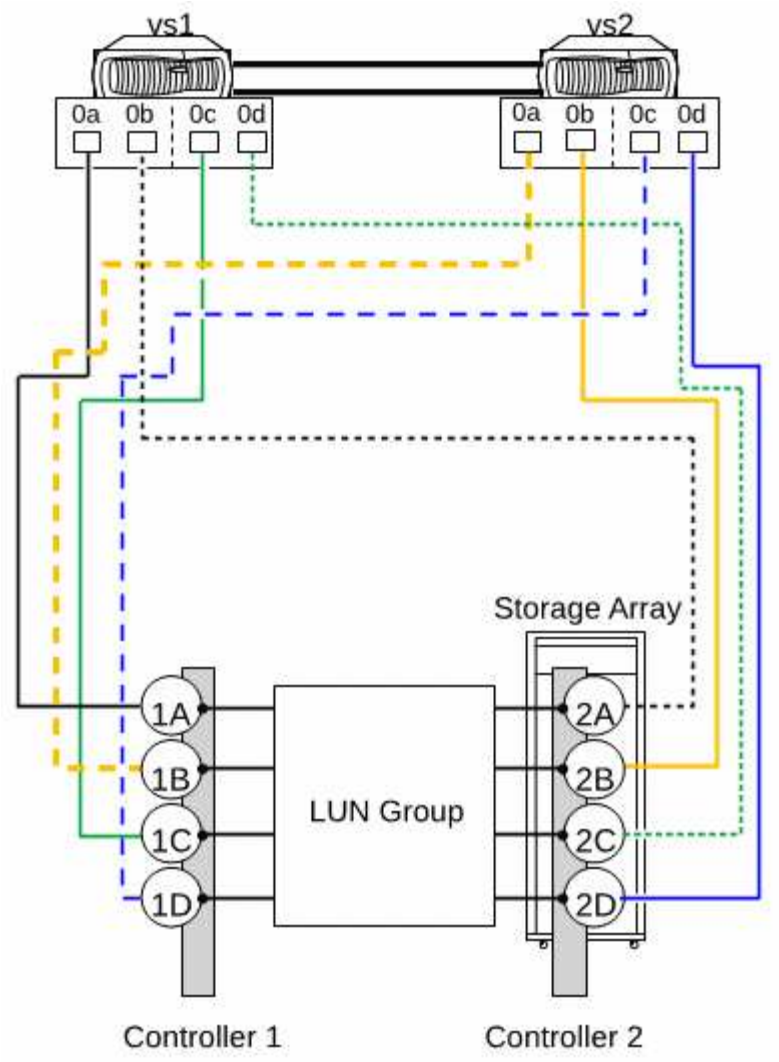

Related information

NetApp Interoperability Matrix Tool

Stretch MetroCluster installation and configuration

Copyright Information

Copyright © 2022 NetApp, Inc. All rights reserved. Printed in the U.S. No part of this document covered by copyright may be reproduced in any form or by any means-graphic, electronic, or mechanical, including photocopying, recording, taping, or storage in an electronic retrieval system- without prior written permission of the copyright owner.

Software derived from copyrighted NetApp material is subject to the following license and disclaimer:

THIS SOFTWARE IS PROVIDED BY NETAPP “AS IS” AND WITHOUT ANY EXPRESS OR IMPLIED WARRANTIES, INCLUDING, BUT NOT LIMITED TO, THE IMPLIED WARRANTIES OF MERCHANTABILITY AND FITNESS FOR A PARTICULAR PURPOSE, WHICH ARE HEREBY DISCLAIMED. IN NO EVENT SHALL NETAPP BE LIABLE FOR ANY DIRECT, INDIRECT, INCIDENTAL, SPECIAL, EXEMPLARY, OR CONSEQUENTIAL DAMAGES (INCLUDING, BUT NOT LIMITED TO, PROCUREMENT OF SUBSTITUTE GOODS OR SERVICES; LOSS OF USE, DATA, OR PROFITS; OR BUSINESS INTERRUPTION) HOWEVER CAUSED AND ON ANY THEORY OF LIABILITY, WHETHER IN CONTRACT, STRICT LIABILITY, OR TORT (INCLUDING NEGLIGENCE OR OTHERWISE) ARISING IN ANY WAY OUT OF THE USE OF THIS SOFTWARE, EVEN IF ADVISED OF THE POSSIBILITY OF SUCH DAMAGE.

NetApp reserves the right to change any products described herein at any time, and without notice. NetApp assumes no responsibility or liability arising from the use of products described herein, except as expressly agreed to in writing by NetApp. The use or purchase of this product does not convey a license under any patent rights, trademark rights, or any other intellectual property rights of NetApp.

The product described in this manual may be protected by one or more U.S. patents, foreign patents, or pending applications.

RESTRICTED RIGHTS LEGEND: Use, duplication, or disclosure by the government is subject to restrictions as set forth in subparagraph (c)(1)(ii) of the Rights in Technical Data and Computer Software clause at DFARS 252.277-7103 (October 1988) and FAR 52-227-19 (June 1987).

Trademark Information

NETAPP, the NETAPP logo, and the marks listed at http://www.netapp.com/TM are trademarks of NetApp, Inc. Other company and product names may be trademarks of their respective owners.